City Council

MAYOR: DON DENT
VICE MAYOR: FRANK MCNELLY

CITY COUNCIL MEMBERS:
MICHELLE CAMPBELL
MIKE COWEN
KEN EDES
CRAIG FRITSINGER
LEE PAYNE

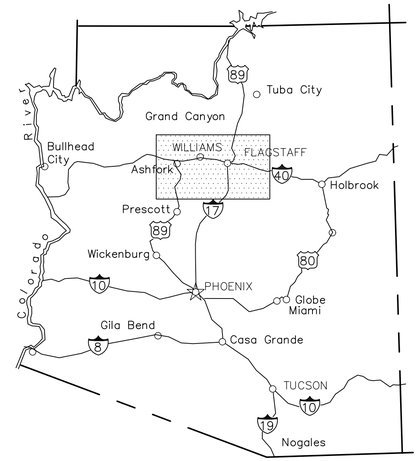

AREA MAP

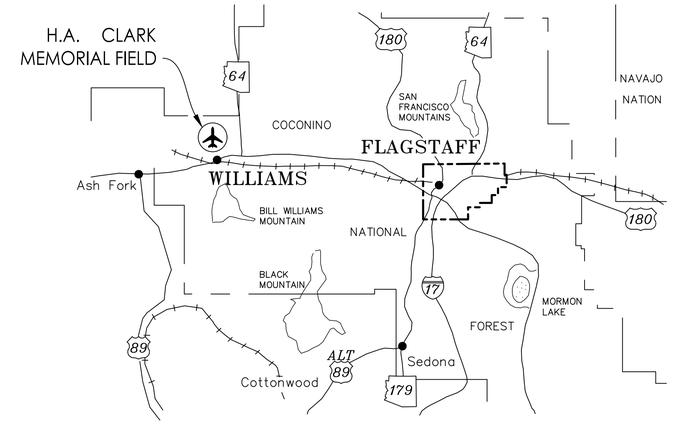

LOCATION MAP

H. A. CLARK MEMORIAL FIELD
Williams, Arizona

TAXIWAY E (A3) REALIGNMENT

March 21, 2025
FAA Project Number: AIG 03-0050-0XX-2025
FAA Project Number: AIP 03-04-0050-0XX-2025
ADOT Project Number: E4S2101D (DESIGN)
Stantec Project Number: 181711365

INDEX OF SHEETS

SHEET NUMBER	TITLE OF SHEET	DRAWING NUMBER
1	COVER SHEET	G1
2	GENERAL NOTES, QUANTITIES AND ABBREVIATIONS	G2
3	SURVEY CONTROL MAP	G3
4	PROJECT LAYOUT PLAN	G4
5	CSPP - GENERAL	G5
6	CSPP - PHASE 1A AND 1B	G6
7	TEMPORARY EROSION CONTROL PLAN	G7
8	EROSION CONTROL DETAILS	G8
9	TYPICAL SECTIONS	C1
10	DEMOLITION PLAN	C2
11	GEOMETRIC LAYOUT PLAN	C3
12	GRADING AND DRAINAGE PLAN	C4
13	PLAN AND PROFILE	C5
14	CROSS SECTIONS STA 1+48 TO STA 3+29	C6
15	CROSS SECTIONS STA 4+20 TO STA 4+65	C7
16	STORM DRAIN PLAN AND PROFILE	C8
17	TAXIWAY MARKING AND DETAILS	C9
18	DRAINAGE DETAILS	C10
19	ELECTRICAL LEGEND	E1.1
20	ELECTRICAL NOTES	E1.2
21	AIRFIELD ELECTRICAL DEMOLITION PLAN	E2.1
22	AIRFIELD ELECTRICAL PLAN	E3.1
23	AIRFIELD GUIDANCE SIGNAGE SCHEDULE	E4.1
24	ELECTRIC DETAILS - DUCTBANKS	E5.1
25	ELECTRIC DETAILS - GROUNDING	E5.2
26	ELECTRIC DETAILS - 5KV CABLE SPLICE	E5.3
27	ELECTRIC DETAILS - CONCRETE SIGN BASE	E5.4
28	ELECTRIC DETAILS - 2'x3' HANDHOLE	E5.5
29	ELECTRIC DETAILS - JUNCTION CAN	E5.6
30	ELECTRIC DETAILS - ELEVATED EDGE LIGHT	E5.7

Contact Arizona 811 at least two full working days before you begin excavation
ARIZONA811 BLUE STAKE, INC.
Call 811 or click Arizona811.com

Stantec
Stantec Consulting Services Inc.
3101 West Ray Road, Suite 300.
Chandler AZ 85226 U.S.A.
Tel: (480) 687-6100
www.stantec.com

The Contractor shall verify and be responsible for all dimensions. DO NOT scale the drawing - use only the dimensions noted/provided. Report errors and omissions to Stantec. The Copyright to all designs and drawings are the property of Stantec. Reproduction or use for any purpose other than that authorized by Stantec is forbidden.

Consultant

Issued	Revision	By	Appd	YYYY.MM.DD

Issued	By	Appd	YYYY.MM.DD

Permit/Seal

Registered Professional Engineer (Civil)
CERTIFICATE NO. 53829
MICHEAL J. SMEJKAL
Date Signed 03/21/2025
ARIZONA U.S.A.

Client/Project
Taxiway E Realignment
WILLIAMS, AZ U.S.A.

Project No.: 181711365
File Name: 11365-001-G1-CS
Scale: AS NOTED

RSC	MJS	AC	2025.03.21
Dwn.	Dsgn.	Chkd.	YYYY.MM.DD

Title
COVER SHEET

Revision:0 Sheet: 1 of 30
Drawing No.
G1

ORIGINAL SHEET - ANSI D

GENERAL NOTES

1. ALL CONSTRUCTION SHALL BE IN ACCORDANCE WITH THE LATEST EDITION OF FAA ADVISORY CIRCULAR 150/5370-10H, STANDARDS FOR SPECIFYING CONSTRUCTION OF AIRPORTS, WHEREVER APPLICABLE.
2. REFER TO ADVISORY CIRCULAR AC-150/5370-2G FOR OPERATIONAL SAFETY ON AIRPORTS DURING CONSTRUCTION.
3. REFER TO ADVISORY CIRCULAR AC-150/5340-1M FOR MARKING OF PAVED AREAS ON AIRPORTS. IF DETAIL IS NOT INCLUDED HEREIN.
4. REFER TO ADVISORY CIRCULAR AC-150/5210-5D FOR PAINTING, MARKING & LIGHTING OF VEHICLES ON AN AIRPORT.
5. THE CONTRACTOR SHALL OBTAIN AND PAY FOR ALL NECESSARY PERMITS PRIOR TO CONSTRUCTION.
6. THE RPR SHALL BE NOTIFIED 48 HOURS PRIOR TO STARTING ANY PHASE OF CONSTRUCTION.
7. ANY WORK PERFORMED WITHOUT THE APPROVAL OF THE RPR AND/OR ALL WORK AND MATERIAL NOT IN CONFORMANCE WITH THE SPECIFICATIONS IS SUBJECT TO REMOVAL AND REPLACEMENT AT THE CONTRACTOR'S EXPENSE.
8. THE CONTRACTOR IS REQUIRED TO OBTAIN A HAUL PERMIT PRIOR TO HAULING TO OR FROM THE CONSTRUCTION SITE.
9. THE CONTRACTOR SHALL REMAIN WITHIN THE WORK AREAS AND NOT STRAY AROUND THE AIRPORT AIRSIDE AREAS.
10. ALL VEHICLES ARE TO BE PARKED AND SERVICED BEHIND THE CONSTRUCTION RESTRICTION LINE AND/OR IN AN AREA DESIGNATED BY THE AIRPORT MANAGER.
11. CONTRACTOR CONSTRUCTION EQUIPMENT SHALL BE STORED IN THE DESIGNATED CONTRACTOR STAGING AREA. STORAGE OF CONSTRUCTION EQUIPMENT IN THE CONSTRUCTION AREA IS NOT PERMITTED.
12. THE CONTRACTOR SHALL MAINTAIN SECURITY AT ALL ACCESS POINTS. ACCESS GATES SHALL BE LOCKED AT THE END OF EACH CONSTRUCTION DAY.
13. AN APPROVED SET OF PLANS SHALL BE MAINTAINED ON THE JOB SITE AT ALL TIMES WORK IS IN PROGRESS. DEVIATION FROM THE PLANS WILL NOT BE ALLOWED WITHOUT AN APPROVED PLAN REVISION.
14. THE CONTRACTOR WILL UNCOVER ALL EXISTING LINES BEING TIED INTO TO VERIFY THEIR LOCATION.
15. THE CONTRACTOR WILL LOCATE OR HAVE LOCATED ALL EXISTING UNDERGROUND UTILITIES (ELECTRIC, TELEPHONE, PIPELINES, ETC.) AND STRUCTURES IN ADVANCE OF CONSTRUCTION AND WILL ELIMINATE ALL CONFLICTS PRIOR TO START OF CONSTRUCTION. FOR BLUE STAKE CALL 811 OR GO TO Arizona811.com.
16. THE CITY WILL NOT PARTICIPATE IN THE COST OF CONSTRUCTION OR UTILITY RELOCATION.
17. THE CITY OF WILLIAMS IS NOT RESPONSIBLE FOR LIABILITY ACCRUED DUE TO DELAYS AND/OR DAMAGES TO UTILITIES IN CONJUNCTION WITH THIS CONSTRUCTION.
18. NO FINAL ACCEPTANCE SHALL BE ISSUED UNTIL RECORD DRAWINGS, CERTIFIED BY THE RPR, ARE SUBMITTED TO THE CITY.
19. BACKFILLING SHALL NOT BEGIN UNTIL LINES ARE APPROVED BY THE RPR. ALL BACKFILL SHALL BE INSTALLED IN ACCORDANCE PLANS AND SPECIFICATIONS.
20. FACILITIES WHICH ARE NOT SPECIFICALLY LOCATED WITH ACTUAL VERTICAL AND HORIZONTAL CONTROLS ARE LOCATED ONLY APPROXIMATELY AND TO THE BEST AVAILABLE INFORMATION PROVIDED BY THE VARIOUS OWNERS OF FACILITIES AND SUPPLEMENTED BY VISUAL SURFACE INFORMATION WHERE APPROPRIATE. ACCURACY, LOCATION AND COMPLETENESS OF THIS INFORMATION SHALL BE VERIFIED PRIOR TO INITIATION OF CONSTRUCTION.
21. ALL MATERIALS SUBMITTALS SHALL BE FURNISHED BY THE CONTRACTOR AND APPROVED BY THE RPR PRIOR TO CONSTRUCTION.
22. ALL CONSTRUCTION LAYOUT AND STAKING SHALL BE FURNISHED BY THE CONTRACTOR.
23. THE CONTRACTOR SHALL TAKE REASONABLE MEASURES TO PREVENT AIR POLLUTION, INCLUDING, BUT NOT LIMITED TO, DUST CONTROL MEASURES.
24. THE AIRPORT WILL BE OPEN AND OPERATIONAL DURING ALL PHASES OF CONSTRUCTION. WORK OPERATIONS AND TRAFFIC COORDINATION WITH THE AIRPORT MANAGER IS REQUIRED. ALL DIRECTION SHALL COME FROM THE AIRPORT MANAGER OR RPR. NO COORDINATION OR DIRECTION FROM OR TO THE AIRPORT TENANTS WILL BE ACCEPTABLE.
25. THE PERIMETER OF ANY AREA OF TAXIWAY OR APRON THAT IS WITHIN THE WORK AREA SHALL BE DELINEATED WITH LIGHTED LOW PROFILE BARRICADES.
26. ANY AREA IN WHICH A CHANGE OF ELEVATION OF 3 (THREE) INCHES OR MORE EXISTS DURING CONSTRUCTION SHALL BE DELINEATED WITH LIGHTED BARRICADES.
27. THE CONTRACTOR SHALL PROVIDE A POWER BROOM OR HAND SWEEPING AT ALL TIMES DURING THE HAULING PROCESS, ACCESS ROAD CONSTRUCTION ADJACENT TO THE APRONS TO KEEP AIRCRAFT OPERATING AREAS CLEAN AND FREE OF FOREIGN OBJECT DEBRIS (F.O.D.) AT ALL TIMES. ALL PAVEMENT IN THE WORK AREAS AND ALONG THE HAUL ROADS SHALL BE KEPT IN A BROOM CLEAN CONDITION AT ALL TIMES.
28. ALL TRUCKS HAULING BORROW OR WASTE EXCAVATION SHALL BE COVERED.
29. THE CONTRACTOR SHALL MAINTAIN POSITIVE DUST CONTROL DURING ALL PHASES OF THIS CONTRACT.
30. STOCKPILED MATERIAL SHALL BE STORED IN THE CONTRACTOR STAGING AREA. OVERNIGHT STORAGE OF STOCKPILED OR EXCAVATED MATERIALS IN THE CONSTRUCTION AREA IS NOT PERMITTED.

LEGEND

- FIRE HYDRANT
- WV — WATER VALVE
- SEWER MANHOLE
- CO — SEWER CLEAN OUT
- T — TELEPHONE RISER
- E — ELECTRIC EQUIPMENT
- TELE — UNDERGROUND TELEPHONE
- UGE — UNDERGROUND ELECTRIC
- SS — UNDERGROUND SEWER
- W — UNDERGROUND WATER
- C — UNDERGROUND CABLE
- SEDIMENT WATTLES
- GRADING LIMITS

ABBREVIATIONS

AB	Aggregate Base	E	East	Max	Maximum	ROFA	Runway Object Free Area
ABC	Aggregate Base Course	Ea	Each	MH	Manhole	RPR	Resident Project Representative
AC	Asphaltic Concrete	EL	Elevation	Mi	Mile Or Miles	RPZ	Runway Protection Zone
Agg	Aggregate	Elec, E	Electric Or Electricity	Min	Minimum	RR	Railroad
Alt	Alternate	ELEV	Elevation	MIRL	Medium Intensity Runway Lights	RSA	Runway Safety Area
Appr	Approach	Emb	Embankment	Misc	Miscellaneous	Rt	Right
Approx	Approximate	Engr	RPR	Mod	Modify Or Modified	R/W	Runway
Asph	Asphalt	Ent	Entrance	Mon	Monument	S	South
AZ	Azimuth	EP	Edge Of Pavement	Mtl	Material	Salv	Salvage
BC	Begin Curve	Esmt	Easement	N	North	SD	Storm Drain
BC	Brass Cap	Est	Estimate	Natl	National	SG	Subgrade
Bdy	Boundary	Ex	Excavation	NAVAID	Navigational Aid	Sh	Sheet
Bgn	Begin	Exp Jt	Expansion Joint	No	Number	Shldr	Shoulder
Bit	Bituminous	Exst	Existing	Obl	Obliterate	Spec	Specification
Bldg	Building	Ext	External	OD	Outside Diameter	Sq	Square
BM	Bench Mark	FBO	Fixed Base Operator	OFA	Object Free Area	Sq Ft, SF	Square Feet
Brg	Bearing	Fed	Federal	OFZ	Obstacle Free Zone	Sq Yd, SY	Square Yard
BRL	Building Restriction Line	Fig	Figure	OH	Overhead	SR	State Route
BW	Barbed Wire	Fin	Finish	Orig	Original	St	Street
C&G	Curb And Gutter	Fl	Floor	P/L	Property Line	STA	Station
CL	Center Line	FL	Flow Line	PAPI	Precision Approach Path Indicator	Std	Standard
CB	Catch Basin	Fnd	Found	PC	Point Of Curvature	Str	Structure Or Structural
CBC	Concrete Box Culvert	Ft	Feet Or Foot	PCC	Portland Cement Concrete	Swlk	Sidewalk
Cem	Cement	Ftg	Footing	PCCP	Portland Cement Concrete Pvmt	T	Tangent Length
CFS	Cubic Feet Per Second	Furn	Furnish Or Furnished	Ped	Pedestrian	Tan	Tangent
CG	Cattle Guard	Fut	Future	PI	Point Of Intersection	TC	Top Of Curb
C-I-P	Cast-In-Place	Fwy	Freeway	Pkwy	Parkway	TCE	Temporary Construction Easement
Cl	Class	G	Gas	Pl	Place	Tel	Telephone
Clr	Clear	Galv	Galvanize Or Galvanized	Prelim	Preliminary	Temp	Temporary
Clv	Culvert	GB	Grade Break	Prj	Project	TH	Threshold
Co	County	GM	Gas Meter	Prop	Proposed	T/L	Taxilane
Comp	Compact Or Compaction	Gnd	Ground	Prt	Protection	Trns	Transition
Conc	Concrete	Govt	Government	PSI	Pounds Per Square Inch	TSA	Taxiway Safety Area
Cond	Conduit	GPS	Global Positioning System	Pt	Point	TVOR	Very High Frequency Omnirange
Conn	Connection	Gr	Grade	PT	Point Of Tangency	T/W	Taxiway
Cont	Continuous	GR	Guard Rail	PVC	Polyvinyl Chloride	TYP	Typical
Coord	Coordinate	Grb	Grubbing	PVI	Point of Vertical Intersection	UG	Underground
Cor	Corner	Grd	Guard	PVMT	Pavement	Var	Variable
Corr	Correction	GV	Gas Valve	Qty	Quantity	VC	Vertical Curve
Cr	Crown	Hdwl	Headwall	R	Radius	VCP	Vitrified Clay Pipe
Cst	Construct Or Construction	HIRL	High Intensity Runway Lights	R/W	Right Of Way	Vert	Vertical
Ctr	Center	Hor	Horizontal	RC	Reinforced Concrete	Vol	Volume
Cu	Cubic	Ht, H, h	Height	RCP	Reinforced Concrete Pipe	VOR	Very High Frequency Omnirange
CWY	Clearway	HW	Head Water	Rd	Road	VPI	Vertical Point Of Intersection
CY	Cubic Yard(s)	Hwy	Highway	Rdwy	Roadway	W	Water
D	Degree Of Curve	ID	Inside Diameter	Rebar	Reinforcing Bar	W	West
DA	Drainage Area	In	Inch Or Inches	Recst	Reconstruct	W	Wide Or Width
Dbl	Double	Incl	Include, Included Or Inclusive	Ref	Reference	WM	Water Meter
Dcl	Deceleration	Inv	Invert	REIL	Runway End Identifier Lights	WV	Water Valve
Dia	Diameter	Jt	Joint	Reinf	Reinforced Or Reinforcing	WWF	Welded Wire Fabric
DIP	Ductile Iron Pipe	L	Length Or Length Of Curve	Reloc	Relocate, Relocation Or Relocated	X-ING	Crossing
Dist	Distance	Lat	Lateral	Rem	Remove	X-SECT	Cross Section
Dr	Drive	Lbs	Pounds	Reqd	Required	Yd	Yard
Dtl	Detail	Lin	Linear Or Lineal	Resv	Reservation		
Dwg	Drawing	LF	Linear Feet	RPR	Resident Project Representative		
Dwy	Driveway	Lt	Left	Ret	Retain Or Retaining		
				Rev	Revised Or Revision		

Taxiway E Realignment - Summary of Quantities

No.	Spec. No.	Item Description	Unit	Quantity	As-Built
		Civil			
1	C-100-14.1	Contractor Quality Control Program (CQCP)	LS	1	
2	C-102-5.1	Temporary Air and Water Pollution, Soil Erosion and Siltation Control (SWPPP)	LS	1	
3	C-105-6.1	Mobilization	LS	1	
4	M-005-7.1	Airport Safety and Security	LS	1	
5	M-102-3.1	Contractor Construction Staking and Layout	LS	1	
6	M-104-4.1	Construction Water	MGAL	50	
7	P-101-5.1	Pavement Removal	SY	2,475	
9	P-101-5.3	Removal of Pipe	LF	226	
10	P-101-5.4	Removal of Underdrain	LF	781	
11	P-101-5.5	Removal of Buried Structures	EA	5	
12	P-152-4.1	Unclassified Excavation	CY	2,220	
13	P-152-4.2	Compacted Subgrade	SY	1,930	
14	P-154-5.1	Subbase - (Recycled Pavement Materials 6")	SY	1,845	
15	P-154-5.2	Separation Geotextile	SY	1,845	
16	P-208-5.1	9" Aggregate Base Course	SY	1,770	
17	P-403-8.1	Asphalt Mixture Surface Course	TON	490	
18	P-620-5.1	Marking	SF	1,085	
19	P-620-5.2	Existing Pavement Marking Removal	SF	245	
20	D-701-5.1	24 inch CMP	LF	332	
21	D-701-5.2	24 inch Pipe End Treatment	EA	4	
22	D-705-5.4	Pipe Underdrains, Complete	LF	785	
23	T-901-5.1	Seeding	AC	1.0	
		Electrical			
23	L-100-5.1	Remove and Salvage Existing Taxiway Edge Light and Isolation Transformer, Remove Existing Base Can	EA	19	
24	L-100-5.2	Excavate and Remove Existing Conduit and Conductor	LF	1,620	
25	L-100-5.3	Remove Existing Conductors, Conduit to Remain (225 LF)	LS	1	
26	L-100-5.4	Excavate and Remove Existing Concrete Encased Ductbank	LF	260	
27	L-100-5.5	Excavate and Remove Existing Pullbox/Handhole	EA	3	
28	L-100-5.6	Remove and Salvage Existing Taxiway Edge Light - Base Can to Remain	EA	1	
29	L-100-5.7	Remove Existing Lighted Airfield Guidance Sign and Isolation Transformer, Demo Sign Base	EA	3	
30	L-100-5.8	Temporary Airfield Lighting Cable Jumpers	LS	1	
31	L-108-5.1	L-824, Type C, 1/C #8 AWG, 5kV Cable	LF	1,375	
32	L-108-5.2	L-824, Type C, 2/C #8 AWG, 5kV Cable	LF	1,530	
33	L-110-5.1	Single-way, (1) - 2"Conduit, Direct Buried	LF	1,500	
34	L-110-5.2	Single-way, (1) - 2"Conduit, Concrete Encased	LF	180	
35	L-110-5.3	Multiple-way, (4) - 2" Conduit Concrete Encased	LF	90	
36	L-115-5.1	New 2'x3'x3' Handhole with Aircraft-Rated Lid with Spring Assisted Opening	EA	2	
37	L-115-5.2	New Blank Cover on Existing L-867 Base Can	EA	1	
38	L-115-5.3	New L-867B (12" DIA) Junction Can with Blank Cover	EA	1	
39	L-125-5.1	New L-861T(L) LED Taxiway Edge Light and Isolation Transformer On New L-867 Base Can	EA	26	
40	L-125-5.2	Install Salvaged Size 1, 2-Module Airfield Guidance Sign and Isolation Transformer on New Sign Base	EA	2	
41	L-125-5.3	Install Salvaged Size 1, 3-Module Airfield Guidance Sign and Isolation Transformer on New Sign Base	EA	1	
42	L-125-5.4	L-861T(L) LED Taxiway Edge Light and Isolation Transformer (Spare)	EA	2	
43	L-125-5.5	Light Vegetation Control Mats	EA	26	

Contact Arizona 811 at least two full working days before you begin excavation
ARIZONA811 BLUE STAKE, INC.
Call 811 or click Arizona811.com

Stantec
Stantec Consulting Services Inc.
3131 West Frye Rd. Ste. 200.
Chandler AZ 85226 U.S.A.
Tel: (480) 687-6100
www.stantec.com

The Contractor shall verify and be responsible for all dimensions. DO NOT scale the drawing - any errors or omissions shall be reported to Stantec without delay. The Copyrights to all designs and drawings are the property of Stantec. Reproduction or use for any purpose other than that authorized by Stantec is forbidden.

Consultant

Revision	By	Appd	YYYY.MM.DD

Issued	By	Appd	YYYY.MM.DD

Permit/Seal

Registered Professional Engineer (Civil)
CERTIFICATE NO. 53829
MICHEAL J. SMEJKAL
Date Signed 03/21/2025
ARIZONA U.S.A.

Client/Project
Taxiway E Realignment
WILLIAMS, AZ U.S.A.

Project No.: 181711365
File Name: 11365-002-G2-GN

Scale: AS NOTED

RSC	MJS	AC	2025.03.21
Dwn.	Dsgn.	Chkd.	YYYY.MM.DD

Title
GENERAL NOTES, QUANTITIES AND ABBREVIATIONS

Revision: 0 Sheet: 2 of 30

Drawing No.
G2

ORIGINAL SHEET - ANSI D

C:\Users\jacob.hansen\acccdocs\stantec consulting\181711365_cmx_hrx_e_redign\project files\drawings\sheet_files\11365-002-g2.dgn
2025.04.03 9:53:58 AM

Control Points (Local Ground Coordinates)				
Point #	Northing	Easting	Elevation	Description
10	11364.95	10622.01	6658.900	CP
101	11073.51	11200.97	6652.480	1/2 REBAR
1004	11078.57	9632.21	6677.430	NAIL
1005	14943.54	10321.41	6619.920	NAIL
1006	16094.40	11090.22	6621.750	NAIL
1009	15997.08	11958.45	6620.560	NAIL
1010	13956.69	10808.98	6644.890	NAIL
1011	11703.15	10402.36	6659.760	NAIL
1012	13016.27	11873.52	6658.920	HUB
1015	11647.27	11630.26	6656.770	NAIL
1823	12311.21	10795.99	6652.190	CP–1823
2622	10324.08	10427.43	6672.790	CP
2898	13189.38	10958.65	6646.390	CP–2898
2899	14031.69	11115.74	6639.930	CP–2899
2900	14923.13	11281.59	6629.120	CP–2900
2901	15650.91	11404.32	6623.130	CP–2901
4889	11526.19	11183.74	6656.500	1/2 REBAR
5078	15876.71	11078.96	6624.540	BC

PACS and SACS (Local Ground Coordinates)					Grid Coordinates (Intnl Ft) NAD 83 Horizontal, NAVD 88 Vertical		
Point #	Northing	Easting	Elevation	Description	Northing	East	Elev
					1564119.38	616970.31	6678.5
10016	10472.68	10378.21	6672.315	BC	1569047.17	617904.12	6633.3
10017	15409.10	11275.83	6627.033	BC	1566032.19	617550.64	6657.2

Runway/Taxiway Geometry Control Points (Local Ground Coordinates)			
Point #	Northing	Easting	Description
1	10076.35	10014.02	RWY/TWY G INT
2	11661.58	10305.07	RWY/TWY F INT
3	12599.13	10477.19	RWY/TWY E INT
4	13926.55	10720.91	RWY/TWY D INT
5	15877.20	11079.05	RWY/TWY C INT
6	10167.58	10334.12	TWY G PC
7	10306.29	10462.90	TWG G PT/BEGIN TWY A
8	11335.91	10651.96	TWY A/S APRON CONNECTOR INT
9	11589.43	10698.49	TWY A/TWY F INT
11	11830.66	10742.78	TWY A/APRON CONNECTOR INT
12	12339.38	10836.18	TWY A/TWY E/TXLN S1 INT
13	12904.84	10940.01	TWY A/TAXILANE N1 INT
14	13854.32	11114.33	TWY A/TWY D INT
16	15672.57	11448.31	TWY C PC
18	15832.48	11324.91	TWY C PT

LEGEND

- TAXIWAY E REALIGNMENT
- RSA — RUNWAY SAFETY AREA
- OFA — RUNWAY OBJECT FREE AREA
- TSA — TAXIWAY SAFETY AREA
- TOFA — TAXIWAY OBJECT FREE AREA
- EXISTING FENCE LINE
- CMR–B — PRIMARY AIRPORT CONTROL STATION (PACS)
- CMR–A/CMR–C — SECONDARY AIRPORT CONTROL STATION (SACS)
- 15 — RUNWAY/TAXIWAY GEOMETRY CONTROL POINT
- 1006 — HORIZONTAL / VERTICAL CONTROL POINT
- FIRE HYDRANT
- WATER VALVE
- UTILITY POLE
- GUY WIRE
- MANHØLE (STORM)
- WATER METER
- ELECTRIC JUNCTION BOX
- RUNWAY/TAXIWAY LIGHT
- APRON LIGHT
- STREET LIGHT
- BOLLARD
- REFLECTORS
- BEACON
- GAS PIPELINE
- BUILDING

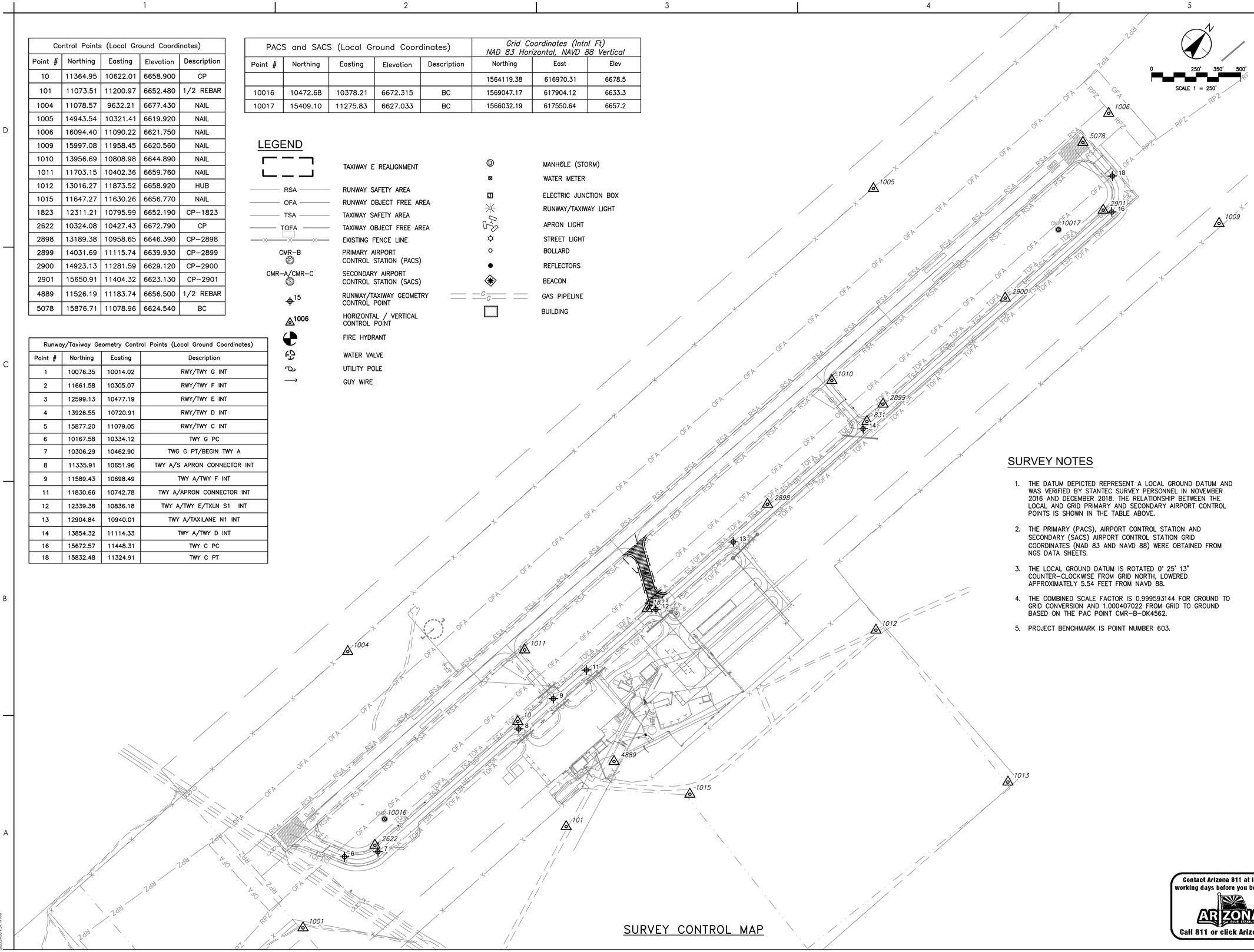

SURVEY CONTROL MAP

SURVEY NOTES

1. THE DATUM DEPICTED REPRESENT A LOCAL GROUND DATUM AND WAS VERIFIED BY STANTEC SURVEY PERSONNEL IN NOVEMBER 2016 AND DECEMBER 2018. THE RELATIONSHIP BETWEEN THE LOCAL AND GRID PRIMARY AND SECONDARY AIRPORT CONTROL POINTS IS SHOWN IN THE TABLE ABOVE.
2. THE PRIMARY (PACS), AIRPORT CONTROL STATION AND SECONDARY (SACS) AIRPORT CONTROL STATION GRID COORDINATES (NAD 83 AND NAVD 88) WERE OBTAINED FROM NGS DATA SHEETS.
3. THE LOCAL GROUND DATUM IS ROTATED 0° 25' 13" COUNTER–CLOCKWISE FROM GRID NORTH, LOWERED APPROXIMATELY 5.54 FEET FROM NAVD 88.
4. THE COMBINED SCALE FACTOR IS 0.999593144 FOR GROUND TO GRID CONVERSION AND 1.000407022 FROM GRID TO GROUND BASED ON THE PAC POINT CMR–B–DK4562.
5. PROJECT BENCHMARK IS POINT NUMBER 603.

Contact Arizona 811 at least two full working days before you begin excavation
ARIZONA811 BLUE STAKE, INC.
Call 811 or click Arizona811.com

Stantec
Stantec Consulting Services Inc.
3120 West Frye Road, Suite 200
Chandler AZ 85226 U.S.A.
Tel: (480) 687-6100
www.stantec.com

The Contractor shall verify and be responsible for all dimensions. DO NOT scale the drawing - any errors or omissions shall be reported to Stantec without delay. DO NOT USE THIS PLAN FOR CONSTRUCTION PURPOSES UNLESS ISSUED FOR CONSTRUCTION. The Copyrights to all designs and drawings are the property of Stantec. Reproduction or use for any purpose other than that authorized by Stantec is forbidden.

Consultant

Issued	By	Appd	YYYY.MM.DD

Revision	By	Appd	YYYY.MM.DD

Permit/Seal

Registered Professional Engineer (Civil)
CERTIFICATE NO. 53829
MICHEAL J. SMEJKAL
Date Signed 03/21/2025
ARIZONA, U.S.A.

Client/Project
Taxiway E Realignment
WILLIAMS, AZ U.S.A.

Project No.: 181711365
File Name: 11365-003-G3-SRV
Scale: AS NOTED

RSC	MJS	AC	2025.03.21
Dwn.	Dsgn.	Chkd.	YYYY.MM.DD

Title
SURVEY CONTROL MAP

Revision:0 Sheet: 3 of 30

Drawing No.
G3

ORIGINAL SHEET - ANSI D

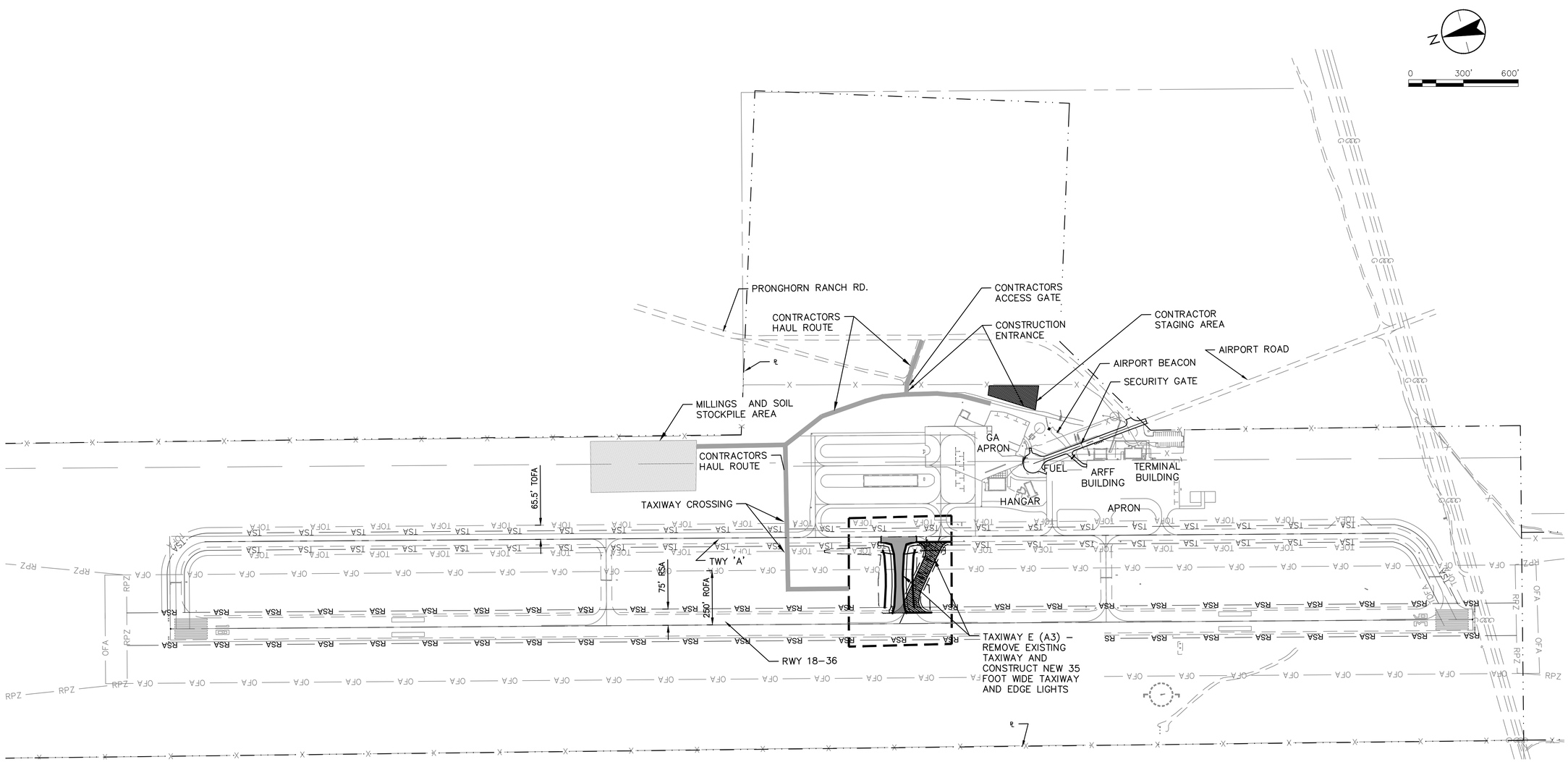

GENERAL SCOPE OF WORK

1. THIS PROJECT IS TO REALIGN TAXIWAY E TO REMOVE DIRECT ACCESS TO THE RUNWAY FROM THE APRON. THIS WILL IMPROVE SAFETY AND WILL BRING THE AIRPORT INTO COMPLIANCE WITH CURRENT FEDERAL AVIATION ADMINISTRATION (FAA) CRITERIA FOR A B–II AIRPORT.

   THE COMPONENTS OF THE PROJECT WILL INCLUDE:

   - REMOVAL OF EXISTING TAXIWAY E, DRAINAGE STRUCTURE, UNDERDRAINS AND EDGE LIGHTING AND SIGNAGE. INSTALL NEW DRAINAGE STRUCTURE, UNDERDRAINS AND ELECTRICAL CIRCUIT. CONSTRUCT TAXIWAY E TO THE NEW ALIGNMENT AND REINSTALL TAXIWAY E EDGE LIGHTS, SIGNS, AND PAVEMENT MARKINGS.
   - THE CONTRACTOR SHALL COMPLY WITH ALL FEDERAL, STATE AND LOCAL SAFETY REGULATIONS AND SHALL NOT ENTER INTO ANY AREA OUTSIDE OF THE CONSTRUCTION LIMITS, STAGING AREA OR DESIGNATED HAUL ROUTES WITHOUT WRITTEN APPROVAL OF THE ENGINEER AND AIRPORT. SEE FAA AC 150/5370–2G "OPERATIONAL SAFETY ON AIRPORT DURING CONSTRUCTION" FOR ADDITIONAL REQUIREMENTS.
   - THE CONTRACTOR WILL COORDINATE HIS ACTIVITY TO MINIMIZE DISRUPTION TO THE TENANTS BASED AT THE AIRPORT AT ALL TIMES.

Contact Arizona 811 at least two full working days before you begin excavation
ARIZONA811 BLUE STAKE, INC.
Call 811 or click Arizona811.com

Stantec
Stantec Consulting Services Inc.
3120 West Fritz Rd. Ste. 300.
Chandler AZ 85226 U.S.A.
Tel: (480) 687-6100
www.stantec.com

The Contractor shall verify and be responsible for all dimensions. DO NOT scale the drawing - any errors or omissions shall be reported to Stantec without delay. The Copyrights to all designs and drawings are the property of Stantec. Reproduction or use for any purpose other than that authorized by Stantec is forbidden.

Consultant

Revision	By	Appd	YYYY.MM.DD

Issued	By	Appd	YYYY.MM.DD

Permit/Seal

Registered Professional Engineer (Civil)
CERTIFICATE NO. 53829
MICHEAL J. SMEJKAL
Date Signed 05/21/2025
ARIZONA U.S.A.

Client/Project
Taxiway E Realignment
WILLIAMS, AZ U.S.A.

Project No.: 181711365
File Name: 11365-004-G4-LP

Scale: AS NOTED

RSC	BIS	RJZ	2025.03.21
Dwn.	Dsgn.	Chkd.	YYYY.MM.DD

Title
PROJECT LAYOUT PLAN

Revision: 0 Sheet: 4 of 30

Drawing No.
G4

ORIGINAL SHEET - ANSI D

CLOSURE SCHEDULE						
PHASE	DESRIPTION	DURATION	RUNWAY CLOSURES	APRON CLOSURES	TAXIWAY CLOSURES	OPERATIONAL RESTRICTIONS
1A	TAXIWAY E CONSTRUCTION INCLUDING: REMOVAL AND SALVAGE OF EXISTING EDGE LIGHTS AND SIGNS SAWCUT AND REMOVAL OF EXISTING ASPHALT AND BASE COURSE INSTALLATION OF DRAINAGE STRUCTURE EARTHWORK AND SUBGRADE PREPARATION INSTALLATION OF GEOTEXTILE AND 6" P-154 SUBGRADE PREPARATION INSTALLATION OF PAVEMENT UNDERDRAINS INSTALLATION OF 9 INCHES OF AGGREGATE BASE COURSE CONSTRUCTION OF CONRETE SIGN BASES INSTALLTION OF HAND HOLES INSTALLTION OF ELECTRICAL CONDUCTOR, CONDUIT AND COUNTERPOISE CONSTRUCTION OF BITUMINUOUS SURFACE COURSE FINAL SHOULDER GRADING INSTALLTION OF TAXIWAY EDGE LIGHTS AND SIGNS SEEDING	45 DAYS		NONE	TWY A CLOSED BETWEEN TAXILANE ACCESSES TO HANGAR APRON; TWY E CLOSED	SAFETY AREA OF NORTH TAXILANE ACCESS TO HANGAR APRON TO BE REDUCED ADG I - 49-FT TO ALLOW REMOVAL OF EXISTING TWY E PAVEMENT
1B	TAXIWAY E CONSTRUCTION INCLUDING: REMOVAL AND SALVAGE OF EXISTING EDGE LIGHTS SAWCUT AND REMOVAL OF EXISTING ASPHALT AND BASE COURSE EARTHWORK AND SUBGRADE PREPARATION INSTALLATION OF GEOTEXTILE AND 6" P-154 SUBGRADE PREPARATION INSTALLATION OF PAVEMENT UNDERDRAINS INSTALLATION OF 9 INCHES OF AGGREGATE BASE COURSE INSTALLTION OF ELECTRICAL CONDUCTOR, CONDUIT AND COUNTERPOISE CONSTRUCTION OF BITUMINUOUS SURFACE COURSE PAVEMENT MARKINGS FINAL SHOULDER GRADING INSTALLTION OF TAXIWAY EDGE LIGHTS A TOTAL OF 5 DAYTIME CLOSURES WILL BE ALLOWED FOR PHASE 1B AND INSTALLTION OF TAXIWAY EDGE LIGHTS AND SIGNS SEEDING	5 DAYS	TEMPORARY CLOSURE OF RUWNAY 18-26 DURING WORK INSIDE THE RSA	NONE	TWY A CLOSED BETWEEN TAXILANE ACCESSES TO HANGAR APRON; TWY E CLOSED	TEMPORARY CLOSURE OF RWY 18-36 IS NOT CONSECUTIVE. THE RUWAY MAY ONLY BE CLOSED FOR A TOTAL OF 5 DAYS DURING CONSTRUCTION OF PHASES 1A AND 1B
2	FINAL PAVEMENT MARKINGS	1 DAY (AFTER 30 DAY CURE)	1 HOUR CLOSURE OF RWY 18-26		1 HOUR CLOSURE OF TWY A	

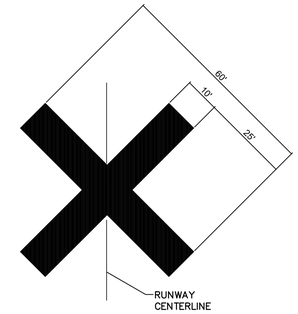

CLOSED RUNWAY MARKING
(YELLOW)
N.T.S.

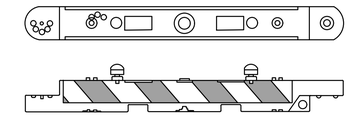

LOW PROFILE BARRICADE
W / LIGHT DETAIL
NTS

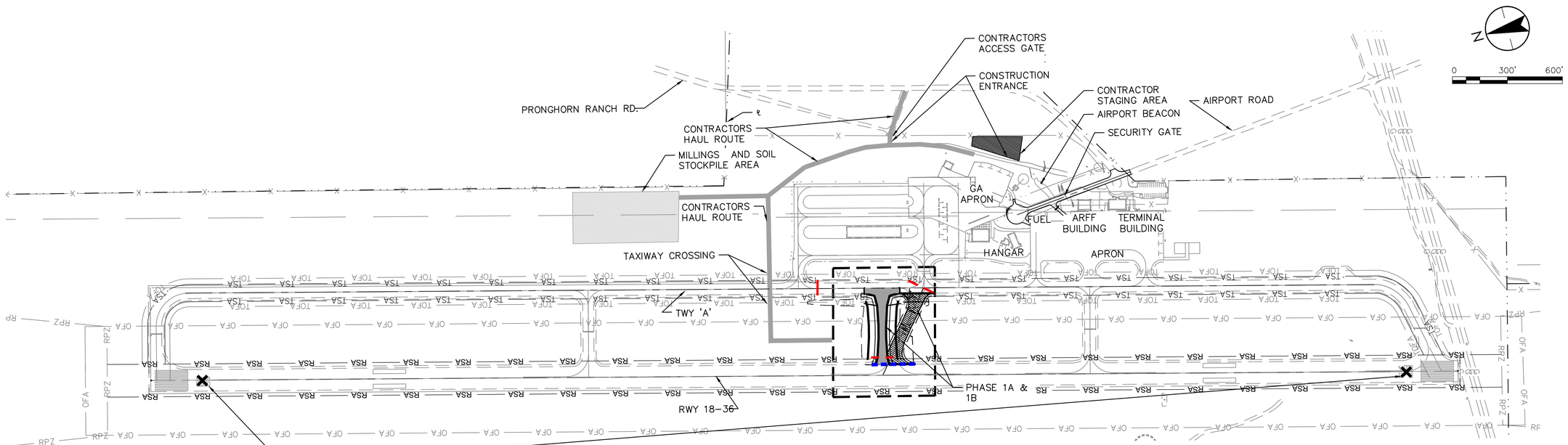

INSTALL RUNWAY CLOSURE X'S DURING EACH DAYTIME CLOSURE IN PHASE 1B. CONTRACTOR TO FURNISH, INSTALL AND REMOVE CLOSED RUNWAY MARKER "X's"

CONSTRUCTION SAFETY AND PHASING PLAN

PHASING NOTES

1. THE CLOSURE SCHEDULE (PHASING) DEPICTED CONSIDERS ALL WORK BEING AWARDED. THE CONTRACTOR MAY PROVIDE AN ALTERNATE AIRPORT SCHEDULE/PHASING PLAN OF THEIR WORK AND SCHEDULE FOR REVIEW AND APPROVAL PRIOR TO ANY WORK BEING PERFORMED.
2. THE CITY WILL ISSUE ALL NOTAMS FOR AIRCRAFT MOVEMENT AREA CLOSURES RELATED TO THIS WORK. ALL CONTRACTOR EFFORTS SHALL BE FOCUSED ON THE WORK AREAS SHOWN DURING EACH CLOSURE. THERE IS RUNWAY CLOSURE REQUIRED FOR THE WORK.
3. ALL WORK MAY BE CONSTRUCTED CONCURRENTLY WITHIN EACH CLOSURE AREA AS LONG AS ACCESS IS MAINTAINED TO THE TERMINAL BUILDING, ARFF, AND FBO IN ACCORDANCE WITH THE CLOSURE SCHEDULES SHOWN. LIMITED ACCESS TO HANGARS TO BE COORDINATED PRIOR TO CONSTRUCTION. LOCATION OF BARRICADES SHOWN ARE FOR ILLUSTRATION ONLY AND NOT TO SCALE.
4. WORK AREAS SHALL BE DELINEATED BY LOW-PROFILE WATER-FILLED BARRICADES WITH LOW INTENSITY (BATTERY OPERATED) RED FLASHING LIGHTS. UNIT SHALL BE MULTI-BARRIER, MODEL AR-10x96 OR ENGINEER APPROVED EQUAL. BARRICADES SHALL BE SPACED WITH 15' SPACES ON STRAIGHT ALIGNMENTS AND 10' SPACES ALONG CURVES. THE BARRICADES SHALL BE STRIPED. THE BARRICADES SHALL BE WHITE WITH 10" WIDE SAFETY ORANGE, WEATHER-PROOF REFLECTORIZED TAPE PLACED ON A 45 DEGREE ANGLE TO THE TOP SURFACE OF THE BARRICADE.
5. DURING CLOSURES OF TAXIWAY CONNECTORS ALL RUNWAY EXIT SIGNS AND TAXIWAY LIGHTS SHALL BE BLACKED OUT WITH BAGS. ADDITIONAL REQUIREMENTS REGARDING CONSTRUCTION SETBACK LIMITS ARE CONTAINED IN THE CONSTRUCTION SAFETY PHASING PLAN AND WILL BE ACKNOWLEDGED BY THE CONTRACTOR PRIOR TO THE WORK.
6. PHASE 1A BARRICADES SHALL REMAIN IN PLACE UNTIL COMPLETION OF PAVEMENT MARKINGS IN PHASE 2.

GENERAL NOTES

1. NO VEHICLES ARE TO CROSS AN AIR OPERATIONS AREA DURING ACTIVE OPERATIONS.
2. ALL LIGHTS AND SIGNS SHALL BE SHROUDED WHEN NOT IN USE IN A MANNER ACCEPTABLE TO THE ENGINEER.
3. LOW LEVEL BARRICADES SHALL BE PLACED AT LOCATIONS TO PREVENT AIRCRAFT FROM INADVERTENT ENTRY INTO A CONSTRUCTION ZONE.
4. ROUTE MUST ALWAYS BE MAINTAINED TO ACCESS THE HANGAR APRON.
5. 1 HOUR PRIOR TO SCHEDULED COMPLETION OF WORK, THE WORK ZONE WILL BE INSPECTED BY THE RPR. AT COMPLETION OF THE THE INSPECTION WORK ZONE MUST MEET THE FOLLOWING CRITERIA:
   A. NO DROPOFFS GREATER THAN 3 INCHES.
   B. NO TRANSVERSE OR LONGITUDINAL GRADES EXCEEDING 5%.
   C. ALL BARRICADES MUST BE RESET.
6. THE CONTRACTOR SHALL COMPLY WITH OPERATIONAL SAFETY REQUIREMENTS OF THE AIRPORT DURING ALL PHASES OF CONSTRUCTION PER FAA ADVISORY CIRCULAR 150/5370-2G "OPERATIONAL SAFEY ON AIRPORTS DURING CONSTRUCTION".
7. CONTRACTOR SHALL NOT PARK EQUIPMENT ON AIRFIELD WHEN NOT IN USE.

PHASING LEGEND

- 1A BARRICADE
- 1B BARRICADE
- PHASING LIMITS
- NEW PAVING LIMITS

Contact Arizona 811 at least two full working days before you begin excavation
ARIZONA811 BLUE STAKE, INC.
Call 811 or click Arizona811.com

Stantec
Stantec Consulting Services Inc.
3133 West Frye Rd, Suite 200
Chandler AZ 85226 U.S.A.
Tel: (480) 687-6100
www.stantec.com

The Contractor shall verify and be responsible for all dimensions. DO NOT scale the drawing - use only dimensions that have been provided to construct this project. The Copyrights to all designs and drawings are the property of Stantec. Reproduction or use for any purpose other than that authorized by Stantec is forbidden.

Consultant

Revision	By	Appd	YYYY.MM.DD

Issued	By	Appd	YYYY.MM.DD

Permit/Seal

Registered Professional Engineer (Civil)
CERTIFICATE NO. 53829
MICHEAL J. SMEJKAL
Date Signed 03/21/2025
ARIZONA U.S.A.

Client/Project
Taxiway E Realignment
WILLIAMS, AZ U.S.A.

Project No.: 181711365
File Name: 11365-005-G5-SP
Scale: AS NOTED

RSC	MJS	AC	2025.03.21
Dwn.	Dsgn.	Chkd.	YYYY.MM.DD

Title
CSPP - GENERAL

Revision:0 Sheet: 5 of 30
Drawing No.
G5

c:\users\scottman\a5\docs\acad\stantec consulting\181711365_cmx_hvy_a_realign\project files\drawings\sheet_files\11365-005-g5.dwg
2025.04.03 11:12:44 AM

ORIGINAL SHEET - ANSI D

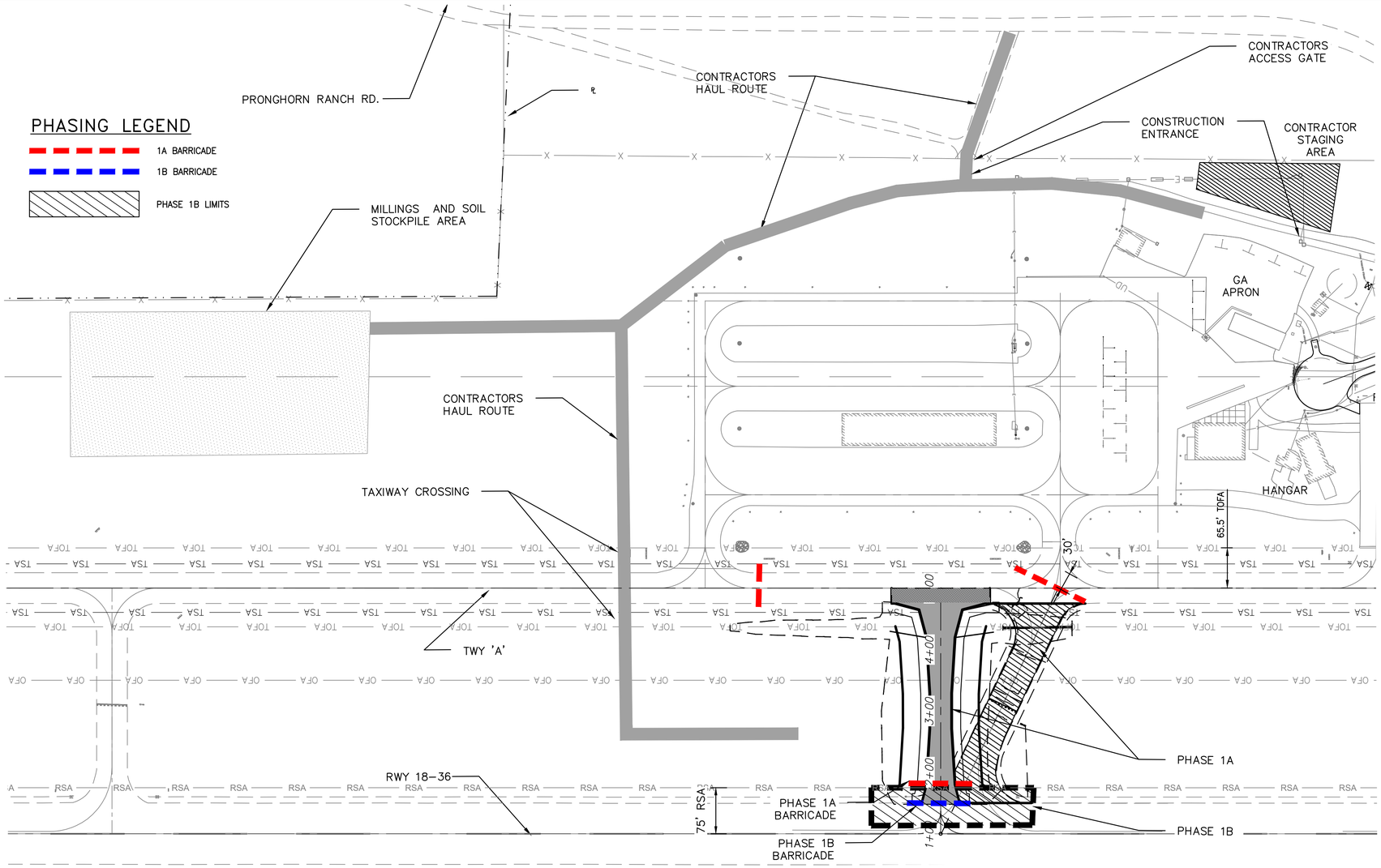

CONSTRUCTION SAFETY AND PHASING PLAN – PHASE 1A & 1B

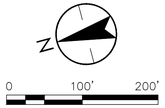

Contact Arizona 811 at least two full working days before you begin excavation

ARIZONA811 BLUE STAKE, INC.

Call 811 or click Arizona811.com

Stantec

Stantec Consulting Services Inc.
3131 West Frye Rd. Suite 200
Chandler AZ 85226 U.S.A.
Tel: (480) 687-6100
www.stantec.com

The Contractor shall verify and be responsible for all dimensions. DO NOT scale the drawing - use only dimensions marked or calculated. Report errors and omissions to the Stantec Project Manager. The Copyright to all designs and drawings are the property of Stantec. Reproduction or use for any purpose other than that authorized by Stantec is forbidden.

Consultant

Issued	By	Appd	YYYY.MM.DD

Revision	By	Appd	YYYY.MM.DD

Permit/Seal

Registered Professional Engineer (Civil) CERTIFICATE NO. 53829 MICHEAL J. SMEJKAL Date Signed 03/21/2025 ARIZONA U.S.A.

Client/Project

Taxiway E Realignment
WILLIAMS, AZ U.S.A.

Project No.: 181711365

File Name: 11365-006-G6-SP

Scale: AS NOTED

RSC	MJS	AC	2025.03.21
Dwn.	Dsgn.	Chkd.	YYYY.MM.DD

Title

CSPP -
PHASE 1A & PHASE 1B

Revision: 0 Sheet: 6 of 30

Drawing No.

G6

ORIGINAL SHEET - ANSI D

c:\users\scochran\dc\accdocs\stantec consulting\181711365_cmr_hwy_a_design\project files\drawings\sheet files\11365-006-g6-sp
2025.04.03 5:54:59 AM

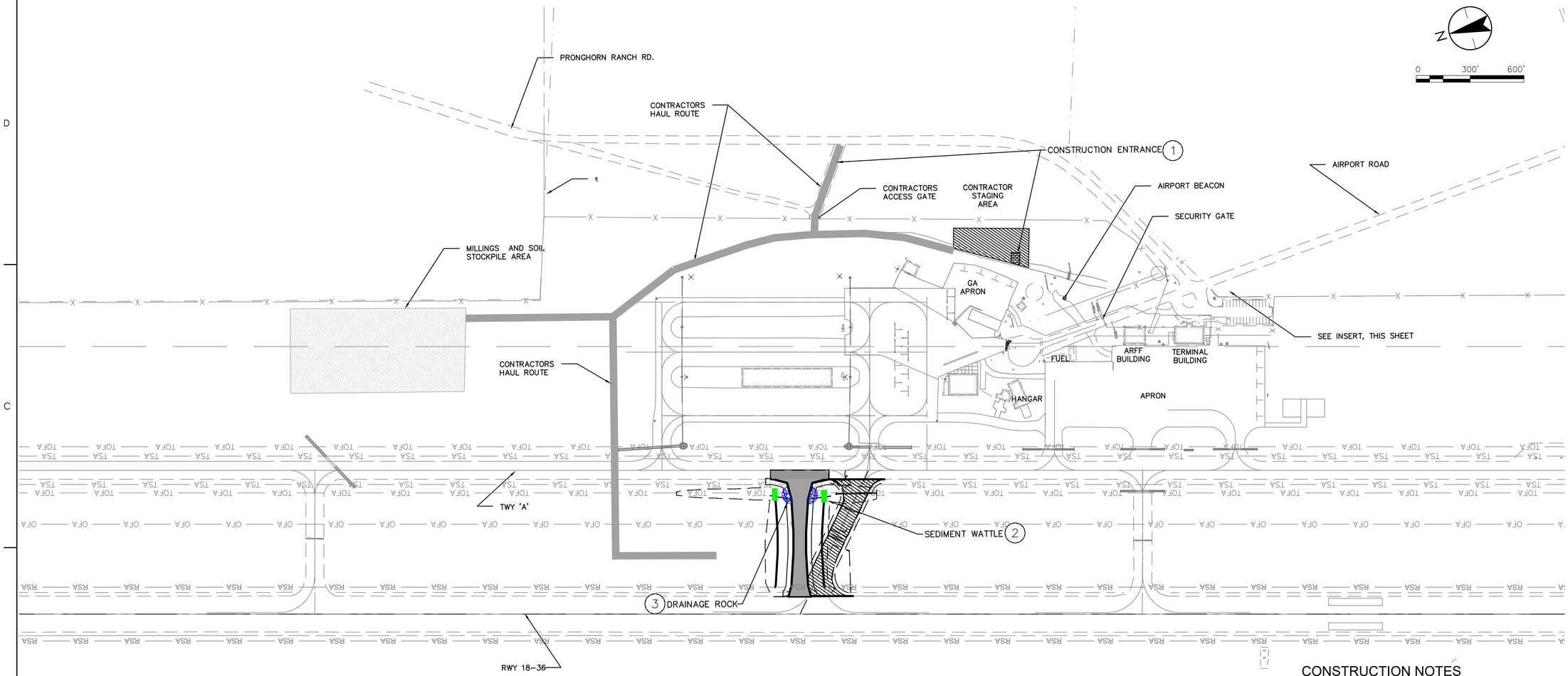

CONSTRUCTION NOTES

1. PLACE CONSTRUCTION ENTRANCE PER DETAIL ES11, SHEET G8.
2. PLACE SEDIMENT WATTLES PER DETAIL ES3, SHEET G8.
3. PLACE DRAINAGE ROCK PER DETAIL ES2, SHEET G8.

GENERAL NOTES

1. TEMPORARY EROSION CONTROL DEVICES SHOWN ON THE EROSION CONTROL PLAN WHICH INTERFERE WITH THE WORK SHALL BE RELOCATED OR MODIFIED AS NEEDED AND WHEN THE RESIDENT PROJECT REPRESENTATIVE DIRECTS, AS THE WORK PROGRESSES TO MEET "AS GRADED" CONDITIONS.

2. ALL LOOSE SOIL AND DEBRIS SHALL BE REMOVED FROM THE RUNWAY AND TAXIWAY AREAS UPON STARTING OPERATIONS AND PERIODICALLY THEREAFTER AS DIRECTED BY THE RESIDENT PROJECT REPRESENTATIVE.

3. SWEEPER SHALL BE MAINTAINED IN PROPER WORKING ORDER AT ALL TIMES. SWEEPER SHALL BE VACUUM TYPE WITH WASH DOWN CAPABILITIES. SWEEPER SHALL BE CAPABLE OF CARRYING 240 GALLONS OF WATER (MIN.) WITH MAIN BROOM AND TWO SIDE BROOMS. SWEEPER SHALL NOT BE EQUIPPED WITH METAL BRISTLES. SWEEPER SHALL BE EQUIVALENT IN PERFORMANCE TO THAT OF THE TYMCO REGENERATIVE AIR SWEEPER MODEL 435/600. SWEEPER NOT MAINTAINING A FOD FREE AREA SHALL BE REMOVED FROM THE PROJECT SITE AND REPLACED AT THE SOLE EXPENSE OF THE CONTRACTOR AT THE DISCRETION OF THE RESIDENT PROJECT REPRESENTATIVE.

4. THE CONTRACTOR SHALL BE RESPONSIBLE FOR THE CLEANUP OF SILT AND MUD AT THE SITE DUE TO CONSTRUCTION ACTIVITY.

5. EQUIPMENT AND WORKERS FOR EMERGENCY WORK SHALL BE MADE AVAILABLE AT ALL TIMES DURING THE RAINY SEASON. ALL NECESSARY MATERIALS SHALL BE STOCKPILED ON SITE AT CONVENIENT LOCATIONS TO FACILITATE RAPID CONSTRUCTION OF TEMPORARY DEVICES WHEN RAIN IS IMMINENT.

6. THE CONTRACTOR SHALL RESTORE ALL EROSION/SEDIMENT CONTROL DEVICES TO WORKING ORDER TO THE SATISFACTION OF THE OWNER AND THE RESIDENT PROJECT REPRESENTATIVE AFTER EACH RUN–OFF PRODUCING RAINFALL SHALL BE INSPECTED PER THE SWPPP.

7. THE CONTRACTOR SHALL INSTALL ADDITIONAL EROSION/SEDIMENT CONTROL MEASURES AS MAY BE REQUIRED BY THE RESIDENT PROJECT REPRESENTATIVE DUE TO UNCOMPLETED GRADING OPERATION OR UNFORESEEN CIRCUMSTANCES, WHICH MAY ARISE.

8. THE CONTRACTOR SHALL BE RESPONSIBLE AND SHALL TAKE NECESSARY PRECAUTIONS TO PREVENT TRESPASS ONTO AREAS WHERE IMPOUNDED WATERS CREATE A HAZARDOUS CONDITION.

9. ALL EROSION/SEDIMENT CONTROL MEASURES PROVIDED PER THE APPROVED PLANS SHALL BE INCORPORATED HEREON. ALL EROSION/SEDIMENT CONTROL FOR INTERIM CONDITIONS SHALL BE DONE TO THE SATISFACTION OF THE RESIDENT PROJECT REPRESENTATIVE.

10. ALL REMOVABLE PROTECTIVE DEVICES SHOWN SHALL BE IN PLACE AT THE END OF EACH WORKING DAY WHEN RAIN IS IMMINENT, AND SHOULD BE MAINTAINED DURING THE RAINY SEASON.

11. THE CONTRACTOR SHALL ONLY GRADE, INCLUDING DEMOLITION FOR THE AREAS FOR WHICH THE CONTRACTOR OR QUALIFIED PERSON CAN PROVIDE EROSION/SEDIMENT CONTROL MEASURES.

12. SAND BAGS SHALL BE STOCKPILED ON SITE, READY TO BE PLACED IN POSITION WHEN RAIN IS FORECAST, OR WHEN THE RESIDENT PROJECT REPRESENTATIVE SO DIRECTS, STORED UNDER COVER TO PROTECT FROM UV DEGRADATION. COORDINATE ALL EROSION CONTROL ITEMS WITH PHASING AND AIRPORT OPERATIONS.

13. UPON COMPLETION OF WORK, CONTRACTOR WILL RE–ESTABLISH THE STAGING AREA TO PRE–CONSTRUCTION CONDITION – OR TO THE ACCEPTANCE OF THE OWNER AND RPR.

Contact Arizona 811 at least two full working days before you begin excavation
ARIZONA811 BLUE STAKE, INC.
Call 811 or click Arizona811.com

Stantec
Stantec Consulting Services Inc.
3131 West Frye Rd. Ste. 300
Chandler AZ 85226 U.S.A.
Tel: (480) 687-6100
www.stantec.com

The Contractor shall verify and be responsible for all dimensions. DO NOT scale the drawing - use only dimensions shown and report any errors or omissions to the Consultant. This Copyright is all designs and drawings are the property of Stantec. Reproduction or use for any purpose other than that authorized by Stantec is forbidden.

Consultant

Issued	By	Appd	YYYY.MM.DD
Revision	By	Appd	YYYY.MM.DD

Permit/Seal

Registered Professional Engineer (Civil) CERTIFICATE NO. 53829 MICHEAL J. SMEJKAL Date Signed 03/21/2025 ARIZONA U.S.A.

Client/Project
Taxiway E Realignment
WILLIAMS, AZ U.S.A.

Project No.: 1817711365
File Name: 11365-008_9-G8_9-SP
Scale: AS NOTED

RSC	BIS	RJZ	2025.03.21
Dwn.	Dsgn.	Chkd.	YYYY.MM.DD

Title
TEMPORARY EROSION CONTROL PLAN

Revision:0 Sheet: 7 of 30
Drawing No.
G7

ORIGINAL SHEET - ANSI D

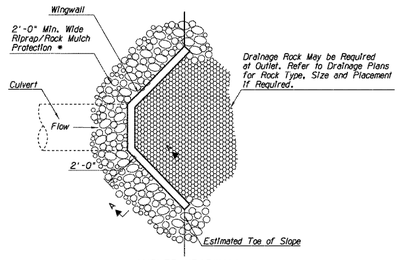

ANGLED HEADWALL
PLAN VIEW (NTS)

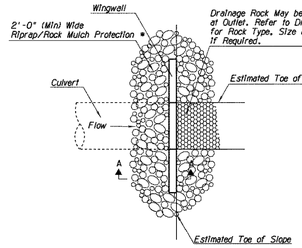

FLUSH HEADWALL
PLAN VIEW (NTS)

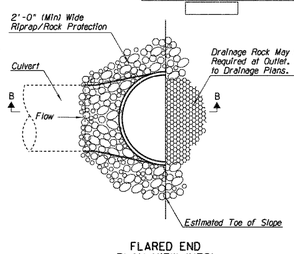

FLARED END
PLAN VIEW (NTS)

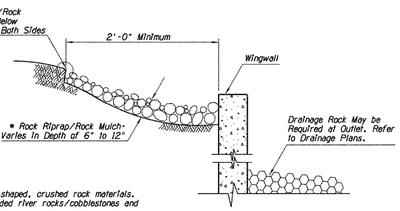

WINGWALL
SECTION A-A (NTS)

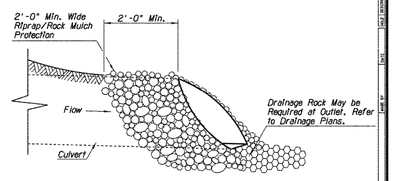

FLARED END
SECTION B-B (NTS)

NOTES:

1. Rock Riprap/Rock Much shall be angular shaped, crushed rock materials. Natural river-run materials such as rounded river rocks/cobblestones and pebbles are NOT acceptable.
2. Rock Riprap/Rock Mulch within the traffic Clear Zone shall conform to the requirements of Section 810-2.03 Sieve Size Gradation A and/or Gradation C, and Section 913 of the Specifications.
3. Embed rock within traffic recovery area/clear zone into the finished grade so that any portion of the rock above the grade will be less than 4" in height.
4. The Installation and maintenance of Rock Protection CMs/BMPs shall not negatively impact traffic safety, nor the designed function of roadway or bridge drainage facilities. Rock Protection CMs/BMPs shall be installed and maintained to carry the stormwater of at least 2-year, 24-hour events.
5. Make field adjustments and corrections of Rock Protection CM/BMP Immediately If It is causing flooding, erosion, and/or affecting roadway safety.
6. The Rock Protection CM/BMP's pay/bid Item shall include all materials used for this CM/BMP: all ground preparation, furnishing, installing, maintaining as well as returning the area to an acceptable condition as approved by the Engineer.
7. Make field adjustments and corrections to ensure NO sensitive biological resources (native species / habitats) will be adversely impacted.

* Rock protection shall be installed behind applicable box culvert headwall/wingwall where approved in the plans and approved by the Engineer.

DETAIL ES2

ROCK PROTECTION FOR INLETS, OUTLETS AND HEADWALL TRANSITION

F.A.R.A. REGION	STATE	PROJECT NO.	SHEET NO.	TOTAL SHEETS	RECORD DRAWING
9	ARIZ.				

	NAME	DATE	
DESIGN	TAO ZI FONG	6-2020	ARIZONA DEPARTMENT OF TRANSPORTATION INFRASTRUCTURE DELIVERY AND OPERATIONS DIVISION ROADSIDE DEVELOPMENT SECTION
DESIGN	HAN MENG	6-2020	
DRAWN	TAO ZI FONG	6-2020	STORMWATER QUALITY PROTECTION & EROSION/SEDIMENT CONTROL DETAILS
DRAWN	HAN MENG	6-2020	
CHECKED	JOHN R. HUCKO	6-2020	
TEAM LEADER	E. LEROY BRADY	6-2020	
ROUTE	MP	LOCATION	SHEET OF

TRACS NO. ___ OF ___

Yr/Roadway\users\e3956\ 7:48:56 PM 6/17/2020 Y:\Roadside\RdsDev\999-BMPs,CMs-999\2020_Updated_CMs-BMPs\ES2_Rock-Protection-Inlet_Outlet_Headwall-2020.dgn

EDGE TREATMENT TRENCHING
TYPICAL SECTION (NTS)

NOTES II:

1. Install nonwoven fabric when water is applied for construction vehicle/equipment cleaning on Gravel Pad.
2. Edge treatment trenching and nonwoven fabric shall not be required if NO wash water is used for vehicle/equipment cleaning.
3. The depth of Gravel Pad varies from 6" to 12" based on the necessities of construction vehicle/equipment as per the approval of the Engineer.

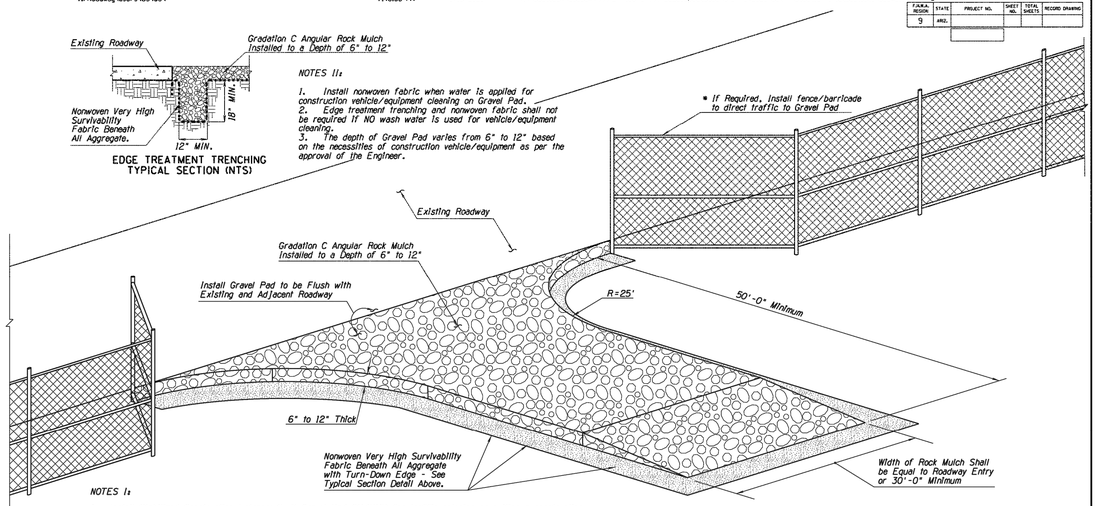

BIRD'S EYE VIEW (NTS)

NOTES I:

1. Install Stabilized Construction Entrance/Exit Gravel Pad CM/BMP for traffic entering or exiting a construction site where sedimentation, clay, silt or other pollutants can be tracked onto public roads and/or adjacent water bodies, as approved by the Engineer. It may also be applied for construction entrance/exit wind erosion/dust control, as approved by the Engineer.
2. Locate new Construction Entrance(s)/Exit(s) at appropriate project entrance/exit points as determined in field with the approval of the Engineer. Relocate Stabilized Construction Entrance/Exit Gravel Pad CM/BMP as needed as project progresses. Replace Rock Mulch materials in drive paths when dirt or mud accumulates.
3. Nonwoven Very High Survivability Fabric shall conform to the standards of Sub-section 1014-4.04 of the Specifications.
4. Rock Mulch materials shall be fractured/crushed rocks in angular shape and as defined in the Sub-section 810-2.03 of the Specifications. Natural river-run materials, especially rounded natural river rocks are not acceptable.
5. Make field adjustments and corrections of Construction Entrance/Exit Gravel Pad CM/BMP Immediately If It is causing flooding and/or affecting roadway safety.
6. When paid separately, the Stabilized Construction Entrance/Exit Gravel Pad CM/BMP's pay/bid Item shall include all materials used for this CM/BMP: all ground preparation, furnishing, installing, final removal, and disposal of this temporary CM/BMP, as well as returning the area to an acceptable condition as approved by the Engineer.
7. * Fence/barricade pay/bid Item shall not be included as a component of the Stabilized Construction Entrance/Exit Gravel Pad CM/BMP pay/bid Item.
8. Make field adjustments and corrections to ensure NO sensitive biological resources (native species / habitats) will be adversely impacted.

DETAIL ES11

STABILIZED CONSTRUCTION ENTRANCE/EXIT GRAVEL PAD

F.A.R.A. REGION	STATE	PROJECT NO.	SHEET NO.	TOTAL SHEETS	RECORD DRAWING
9	ARIZ.				

	NAME	DATE	
DESIGN	TAO ZI FONG	6-2020	ARIZONA DEPARTMENT OF TRANSPORTATION INFRASTRUCTURE DELIVERY AND OPERATIONS DIVISION ROADSIDE DEVELOPMENT SECTION
DESIGN	HAN MENG	6-2020	
DRAWN	TAO ZI FONG	6-2020	STORMWATER QUALITY PROTECTION & EROSION/SEDIMENT CONTROL DETAILS
DRAWN	HAN MENG	6-2020	
CHECKED	JOHN R. HUCKO	6-2020	
TEAM LEADER	E. LEROY BRADY	6-2020	
ROUTE	MP	LOCATION	SHEET OF

TRACS NO. ___ OF ___

Yr/Roadway\users\81525\ 4:28:23 PM 6/17/2020 Y:\Roadside\RdsDev\999-BMPs,CMs-999\2020_Updated_CMs-BMPs\ES11_Stabilized_Const_Entrance_Exit-2020.dgn

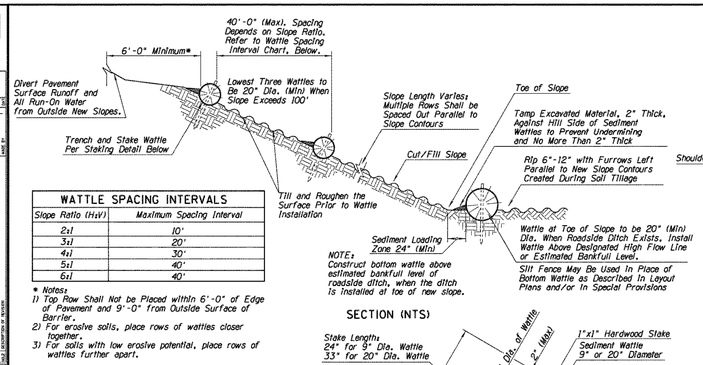

WATTLE SPACING INTERVALS	
Slope Ratio (H:V)	Maximum Spacing Interval
2:1	10'
3:1	20'
4:1	30'
5:1	40'
6:1	40'

* Notes:
1) Top Row Shall Not be Placed within 6'-0" of Edge of Pavement and 9'-0" from Outside Surface of Barrier.
2) For erosive soils, place rows of wattles closer together.
3) For soils with low erosive potential, place rows of wattles further apart.

NOTE:
Construct bottom wattle above estimated bankfull level of roadside ditch, when the ditch is installed at toe of new slope.

SECTION (NTS)

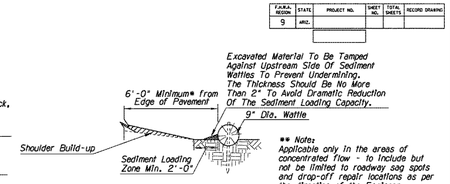

** Notes:
Applicable only in the areas of concentrated flow - to include but not be limited to roadway sag spots and drop-off repair locations as per the direction of the Engineer.

NEW SHOULDER BUILDUP **
PROTECTION SECTION (NTS)

NOTES:

1. Install Sediment Wattles as slopes are constructed to grade or as directed by the Engineer. Select, Install and maintain in conformance with manufacturers' specifications to meet site conditions for slope protection and in accordance with good engineering practices. No Sediment Wattles shall be installed in urban freeway medians, nor where cable barrier systems are employed.
2. Sediment Wattles shall be in continuous contact with trench bottom and sides. Do not overlap wattle ends on top of each other. A 20" Dia. wattle may be made from 2-3 rolled excelsior or straw blankets.
3. Butt adjoining wattles tightly against each other. Drive the first end stake of the second wattle at an angle toward the first wattle to help abut them tightly.
4. Repair any rills or gullies promptly. Make field adjustments and corrections of Wattle CM/BMP Immediately If It is causing flooding, erosion, and/or affecting roadway safety.
5. Construction of cut slopes 2:1 and steeper in soil and rock materials that can be ripped shall be constructed, whenever possible, by Minibenching. Refer to Slope Minibenching CM/BMP Detail.
6. Loosening surface soil is not required where Minibenches are used. For seeded areas, tillage shall be performed to form minor ridges and furrows parallel to new slope contours and as specified in Section 805 of the Specifications and project special provisions.
7. Divert and direct run-on water from outside of the slopes to the spillways and/or rock riprap/rock mulch. Diversion dikes and/or ditches are necessary on natural undisturbed slopes beyond the top limits of new slopes to divert run-on water.
8. Installation and maintenance of Sediment Wattle CMs/BMPs shall not negatively impact traffic safety, nor the designed function of roadway or bridge drainage facilities.
9. Install and maintain Sediment Wattle CMs/BMPs to carry the stormwater of at least 2-year, 24-hour events.
10. The Sediment Wattle CM/BMP's pay/bid Item shall include all materials used for this CM/BMP: all ground preparation, furnishing, installing, maintenance, final removal, and disposal of this temporary CM/BMP, as well as returning the area to an acceptable condition as approved by the Engineer.
11. Refer to Specification Section 810-2.06(C) for Sediment Wattle material specifications.
12. Make field adjustments and corrections to ensure NO sensitive biological resources (native species / habitats) will be adversely impacted.

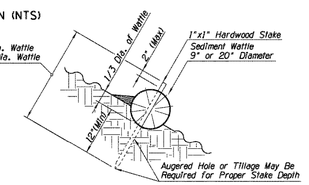

SEDIMENT WATTLE STAKING
DETAIL (NTS)

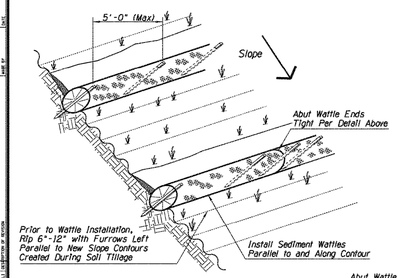

SEDIMENT WATTLE
LAYOUT (NTS)

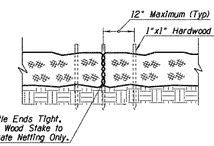

SEDIMENT WATTLE
OVERLAP (NTS)

DETAIL ES3

SEDIMENT WATTLE

F.A.R.A. REGION	STATE	PROJECT NO.	SHEET NO.	TOTAL SHEETS	RECORD DRAWING
9	ARIZ.				

	NAME	DATE	
DESIGN	TAO ZI FONG	6-2020	ARIZONA DEPARTMENT OF TRANSPORTATION INFRASTRUCTURE DELIVERY AND OPERATIONS DIVISION ROADSIDE DEVELOPMENT SECTION
DESIGN	HAN MENG	6-2020	
DRAWN	TAO ZI FONG	6-2020	STORMWATER QUALITY PROTECTION & EROSION/SEDIMENT CONTROL DETAILS
DRAWN	HAN MENG	6-2020	
CHECKED	JOHN R. HUCKO	6-2020	
TEAM LEADER	E. LEROY BRADY	6-2020	
ROUTE	MP	LOCATION	SHEET OF

TRACS NO. ___ OF ___

Yr/Roadway\users\81525\ 4:45:48 PM 6/18/2020 Y:\Roadside\RdsDev\999-BMPs,CMs-999\2020_Updated_CMs-BMPs\ES3_Sediment_Wattle-2020.dgn

Contact Arizona 811 at least two full working days before you begin excavation

Call 811 or click Arizona811.com

Stantec

Stantec Consulting Services Inc.
3133 West Frye Road, Suite 300
Chandler AZ 85226 U.S.A.
Tel: (480) 687-6100
www.stantec.com

The Contractor shall verify and be responsible for all dimensions. DO NOT scale the drawing - any errors or omissions shall be reported to Stantec without delay. Reproduction or use for any purpose other than that authorized by Stantec is forbidden.
The Copyrights to all designs and drawings are the property of Stantec. Reproduction or use for any purpose other than that authorized by Stantec is forbidden.

Consultant

Revision	By	Appd	YYYY.MM.DD
Issued			

Permit/Seal

Registered Professional Engineer (Civil)
CERTIFICATE NO. 53829
MICHEAL J. SMEJKAL
Date Signed 03/23/2021
ARIZONA U.S.A.

Client/Project

Taxiway E Realignment
WILLIAMS, AZ U.S.A.

Project No.: 181711365

File Name: 11365-008_9-G8_9-SP

Scale: AS NOTED

RSC	MJS	AC	2025.03.21
Dwn.	Dsgn.	Chkd.	YYYY.MM.DD

Title

EROSION CONTROL DETAILS

Revision: 0 Sheet: 8 of 30

Drawing No.

G8

C:\users\ucochran\dc\accdocs\stantec.com\ahug\181711365_rmc_hwy_e_realign\project files\drawings\sheet_files\11365-008_9-g8_9-sp

2025.04.03 9:53:28 AM

PLOT SCALE: 1:1 (ANSI D)

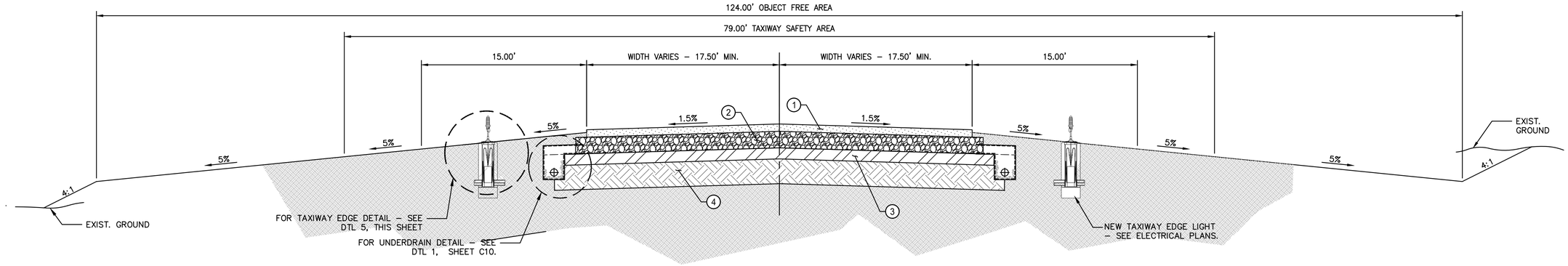

1 TYPICAL TAXIWAY SECTION

NTS

PAVEMENT LEGEND

1. 4" P–403 ASPHALT SURFACE COURSE
2. 9" P–208 AGGREGATE BASE COURSE
3. 6" P–154 RECYCLED ASPHALT PAVEMENT
4. 12" P–152 COMPACTED SUBGRADE 95% STANDARD PROCTOR

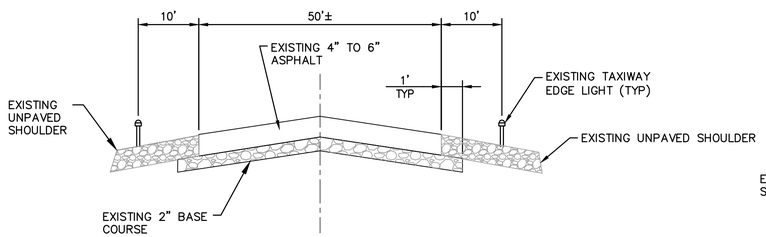

2 EXISTING TAXIWAY "E" PAVEMENT SECTION

NTS

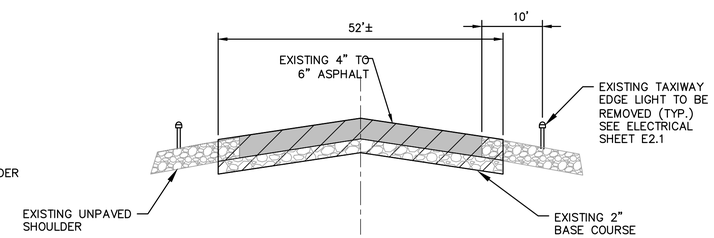

3 TAXIWAY "E" DEMOLITION PAVEMENT SECTION

NTS

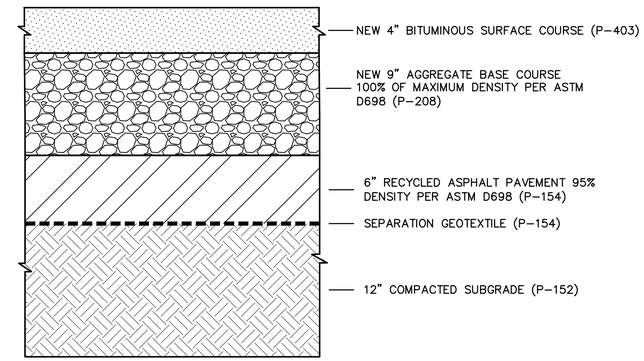

4 PAVEMENT STRUCTURAL SECTION

NTS

STRUCTURAL SECTION NOTES:

1. EXISTING ASPHALT CONCRETE SHALL BE SAWCUT FULL DEPTH AND BASE COURSE OR SUBGRADE SHALL BE REMOVED TO THE DEPTH INDICATED FOR NEW STRUCTURAL SECTION.
2. NEW AGGREGATE BASE COURSE SHALL BE MOISTURE CONDITIONED PRIOR TO PLACEMENT AND SHALL NOT BE WATER SATURATED IN PLACE.
3. NEW ASPHALT SURFACING SHALL BE CONSTRUCTED IN ACCORDANCE WITH ITEM P–403.

GENERAL NOTES:

1. SLOPES SHOWN FOR ALL TYPICAL SECTIONS ARE FOR REFERENCE. ACTUAL FIELD CONDITIONS MAY VARY.
2. IT IS THE INTENT OF THE PROJECT TO RECONSTRUCT TAXIWAY E TO THE LINES AND GRADES SHOWN ON THE PLANS.
3. THE EXISTING TYPICAL SECTIONS ARE BASED ON A GEOTECHNICAL SURVEY BY SPEEDIE AND ASSOCIATES DATED NOVEMBER 20, 2023.
4. IN AREAS OF FILL/EMBANKMENT THE CONTRACTOR SHALL SCARIFY THE EXISTING SOIL TO A DEPTH OF 8 INCHES AND COMPACT TO 95% MAXIMUM DRY DENSITY PER ASTM D698.

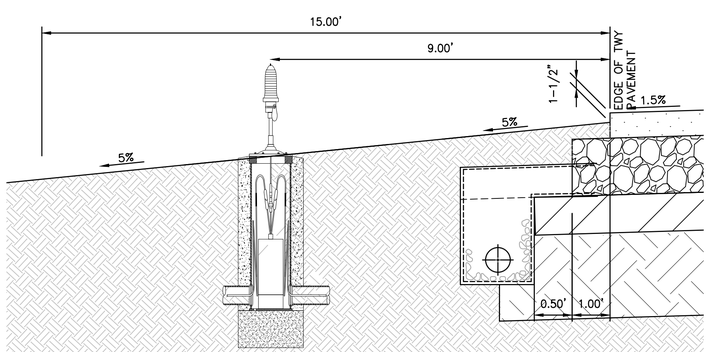

5 TYPICAL TAXIWAY EDGE DETAIL

NTS

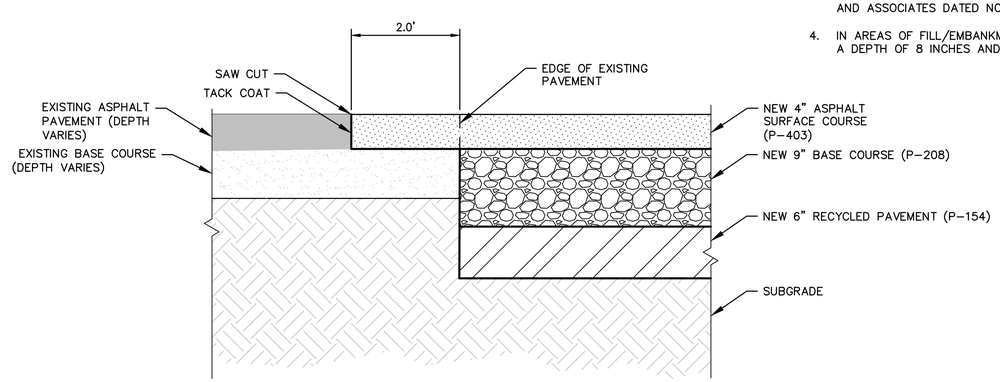

6 PAVEMENT TIE–IN DETAIL

Contact Arizona 811 at least two full working days before you begin excavation
ARIZONA811 BLUE STAKE, INC.
Call 811 or click Arizona811.com

Stantec
Stantec Consulting Services Inc.
3133 West Frye Rd, Suite 300
Chandler AZ 85226 U.S.A.
Tel: (480) 687-5100
www.stantec.com

The Contractor shall verify and be responsible for all dimensions. DO NOT scale the drawing - use only dimensions and instructions shown on this drawing. Any errors or omissions shall be reported to Stantec without delay.
The Copyrights to all designs and drawings are the property of Stantec. Reproduction or use for any purpose other than that authorized by Stantec is forbidden.

Consultant

Issued	By	Appd	YYYY.MM.DD

Revision	By	Appd	YYYY.MM.DD

Permit/Seal

Registered Professional Engineer (Civil)
CERTIFICATE NO. 53829
MICHEAL J. SMEJKAL
Date Signed 03/21/2025
ARIZONA, U.S.A.

Client/Project

Taxiway E Realignment
WILLIAMS, AZ U.S.A.

Project No.: 181711365

File Name: 11365-010-C1-SECT

Scale: AS NOTED

RSC	MJS	AC	2025.03.21
Dwn.	Dsgn.	Chkd.	YYYY.MM.DD

Title

TYPICAL SECTIONS

Revision: 0 Sheet: 9 of 30

Drawing No.

C1

C:\users\sscchorr\dc\accdocs\stantec consulting\181711365_cmr_twy_e_realign\project files\drawings\sheet_files\11365-010-c1-sect
2025.04.03 8:55:37 AM
ORIGINAL SHEET - ANSI D

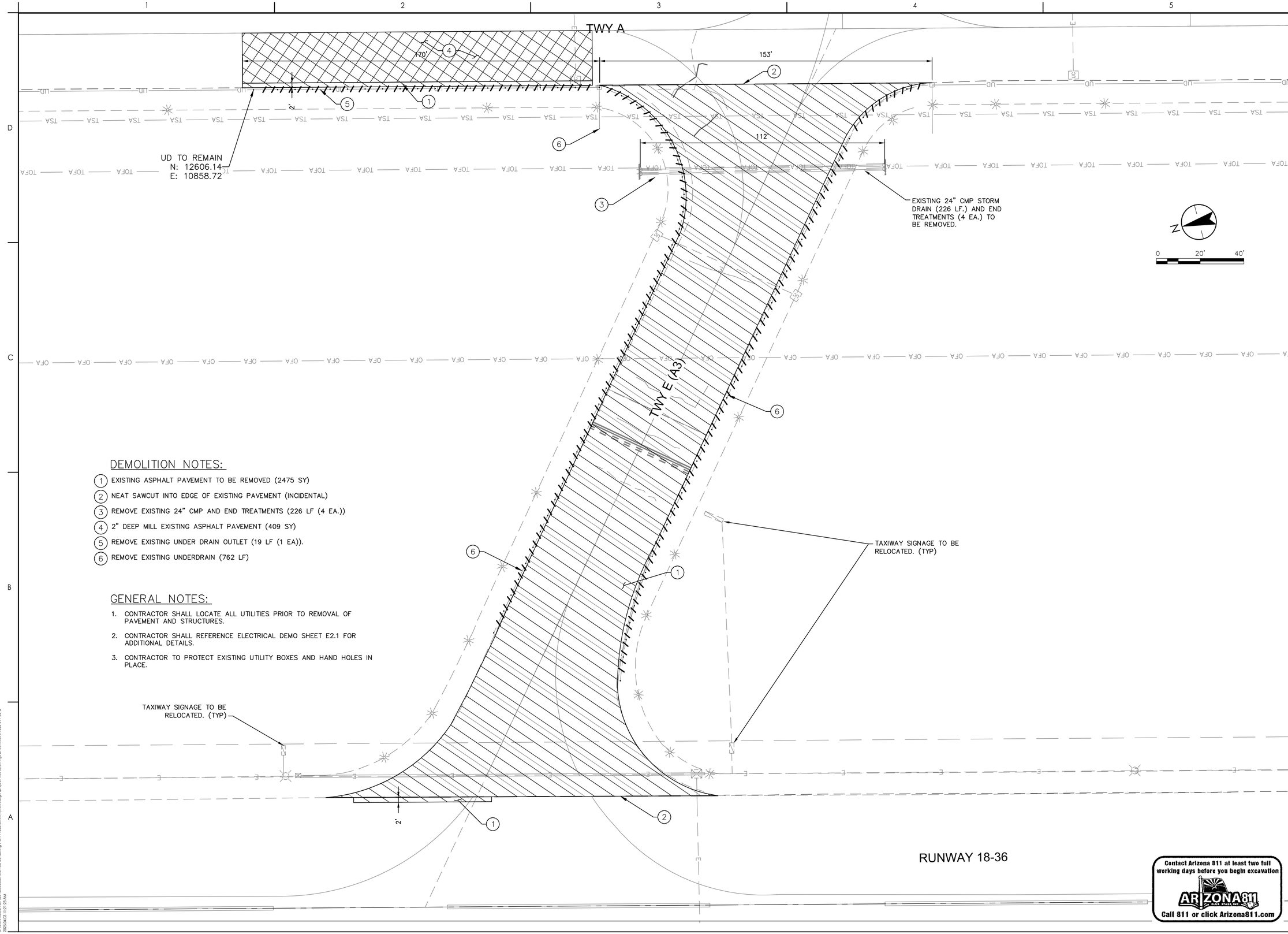

DEMOLITION NOTES:

1. EXISTING ASPHALT PAVEMENT TO BE REMOVED (2475 SY)
2. NEAT SAWCUT INTO EDGE OF EXISTING PAVEMENT (INCIDENTAL)
3. REMOVE EXISTING 24" CMP AND END TREATMENTS (226 LF (4 EA.))
4. 2" DEEP MILL EXISTING ASPHALT PAVEMENT (409 SY)
5. REMOVE EXISTING UNDER DRAIN OUTLET (19 LF (1 EA)).
6. REMOVE EXISTING UNDERDRAIN (762 LF)

GENERAL NOTES:

1. CONTRACTOR SHALL LOCATE ALL UTILITIES PRIOR TO REMOVAL OF PAVEMENT AND STRUCTURES.
2. CONTRACTOR SHALL REFERENCE ELECTRICAL DEMO SHEET E2.1 FOR ADDITIONAL DETAILS.
3. CONTRACTOR TO PROTECT EXISTING UTILITY BOXES AND HAND HOLES IN PLACE.

Contact Arizona 811 at least two full working days before you begin excavation

ARIZONA811 BLUE STAKE, INC.

Call 811 or click Arizona811.com

Stantec

Stantec Consulting Services Inc.
3333 West Frye Road, Suite 200
Chandler AZ 85226 U.S.A.
Tel: (480) 687-6100
www.stantec.com

The Contractor shall verify and be responsible for all dimensions. DO NOT scale the drawing - use only dimensions that have been provided to achieve stated purpose and design intent. The Copyright to all designs and drawings are the property of Stantec. Reproduction or use for any purpose other than that authorized by Stantec is forbidden.

Consultant

Revision	By	Appd	YYYY.MM.DD

Issued	By	Appd	YYYY.MM.DD

Permit/Seal

Registered Professional Engineer (Civil)
CERTIFICATE NO. 53829
MICHEAL J. SMEJKAL
Date Signed 03/21/2025
ARIZONA, U.S.A.

Client/Project

Taxiway E Realignment
WILLIAMS, AZ U.S.A.

Project No.: 181711365

File Name: 11365-011-C2-D

Scale: AS NOTED

RSC	MJS	AC	2025.03.21
Dwn.	Dsgn.	Chkd.	YYYY.MM.DD

Title

DEMOLITION PLAN

Revision:0 Sheet: 10 of 30

Drawing No.

C2

ORIGINAL SHEET - ANSI D

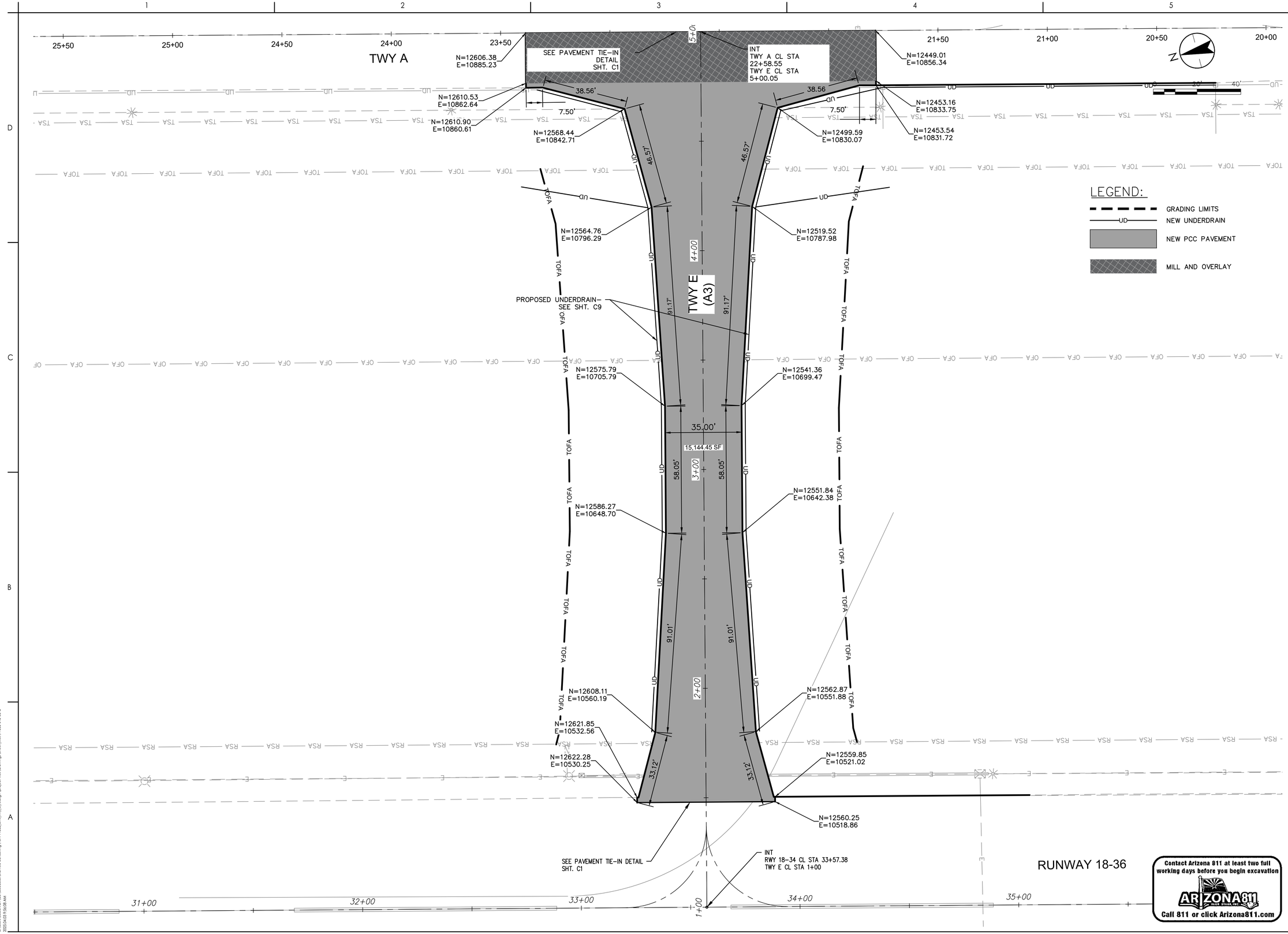

ORIGINAL SHEET - ANSI D

C:\Users\jcochran\ads\jacobs\stantec consulting\181711365_cmx_hvy_e_design\project files\drawings\sheet files\11365-012-c3-d
2025.04.03 9:56:08 AM

Stantec

Stantec Consulting Services Inc.
3131 West Frye Road, Suite 200
Chandler AZ 85226 U.S.A.
Tel: (480) 687-6100
www.stantec.com

The Contractor shall verify and be responsible for all dimensions. DO NOT scale the drawing - use only the dimensions noted/provided. Errors and omissions shall be reported to Stantec without delay. The Copyrights to all designs and drawings are the property of Stantec. Reproduction or use for any purpose other than that authorized by Stantec is forbidden.

Consultant

Issued	By	Appd	YYYY.MM.DD

Revision	By	Appd	YYYY.MM.DD

Permit/Seal

Registered Professional Engineer (Civil)
CERTIFICATE NO. 53829
MICHEAL J. SMEJKAL
Date Signed 03/21/2025
ARIZONA, U.S.A.

Client/Project

Taxiway E Realignment
WILLIAMS, AZ U.S.A.

Project No.: 181711365

File Name: 11365-012-C3-D

Scale: AS NOTED

RSC	MJS	AC	2025.03.21
Dwn.	Dsgn.	Chkd.	YYYY.MM.DD

Title

GEOMETRIC LAYOUT PLAN

Revision:0 Sheet: 11 of 30

Drawing No.

C3

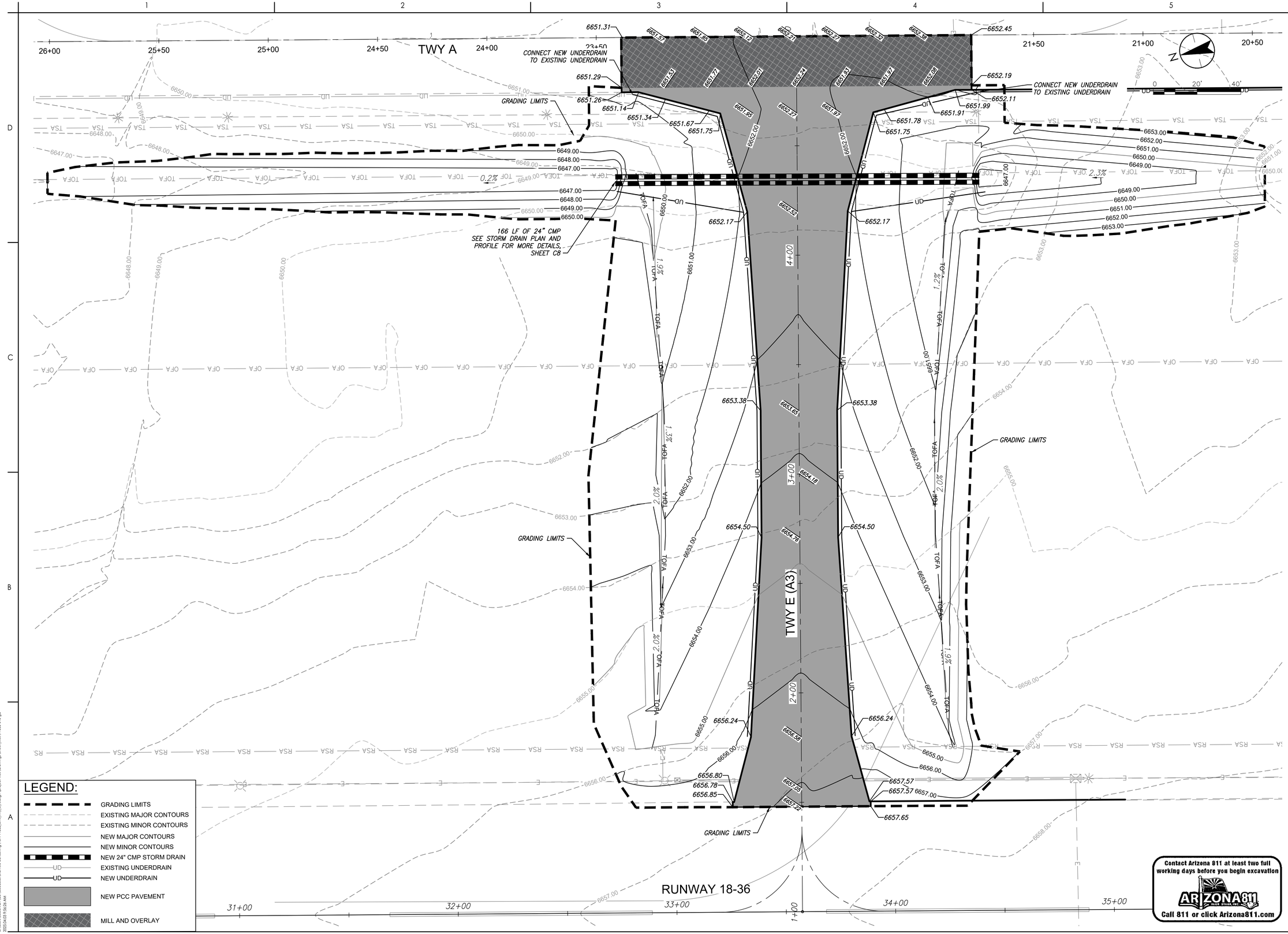

ORIGINAL SHEET - ANSI D

c:\users\scochran\dc\accdocs\stantec consulting\181711365_cmr_hwy_a_realign\project files\drawings\sheet files\11365-013-gd
2025.04.03 9:56:09 AM

Stantec

Stantec Consulting Services Inc.
3120 West Frye Road, Suite 200
Chandler AZ 85226 U.S.A.
Tel: (480) 687-6100
www.stantec.com

The Contractor shall verify and be responsible for all dimensions. DO NOT scale the drawing - use only the dimensions noted/provided. Errors and omissions shall be reported to Stantec without delay. The Copyrights to all designs and drawings are the property of Stantec. Reproduction or use for any purpose other than that authorized by Stantec is forbidden.

Consultant

Issued	By	Appd	YYYY.MM.DD

Revision	By	Appd	YYYY.MM.DD

Permit/Seal

Registered Professional Engineer (Civil)
CERTIFICATE NO. 53829
MICHEAL J. SMEJKAL
Date Signed 03/21/2025
ARIZONA U.S.A.

Client/Project

Taxiway E Realignment
WILLIAMS, AZ U.S.A.

Project No.: 181711365

File Name: 11365-013-GD

Scale: AS NOTED

RSC	BIS	RJZ	2025.03.21
Dwn.	Dsgn.	Chkd.	YYYY.MM.DD

Title

GRADING AND DRAINAGE PLAN

Revision: 0 Sheet: 12 of 30

Drawing No.

C4

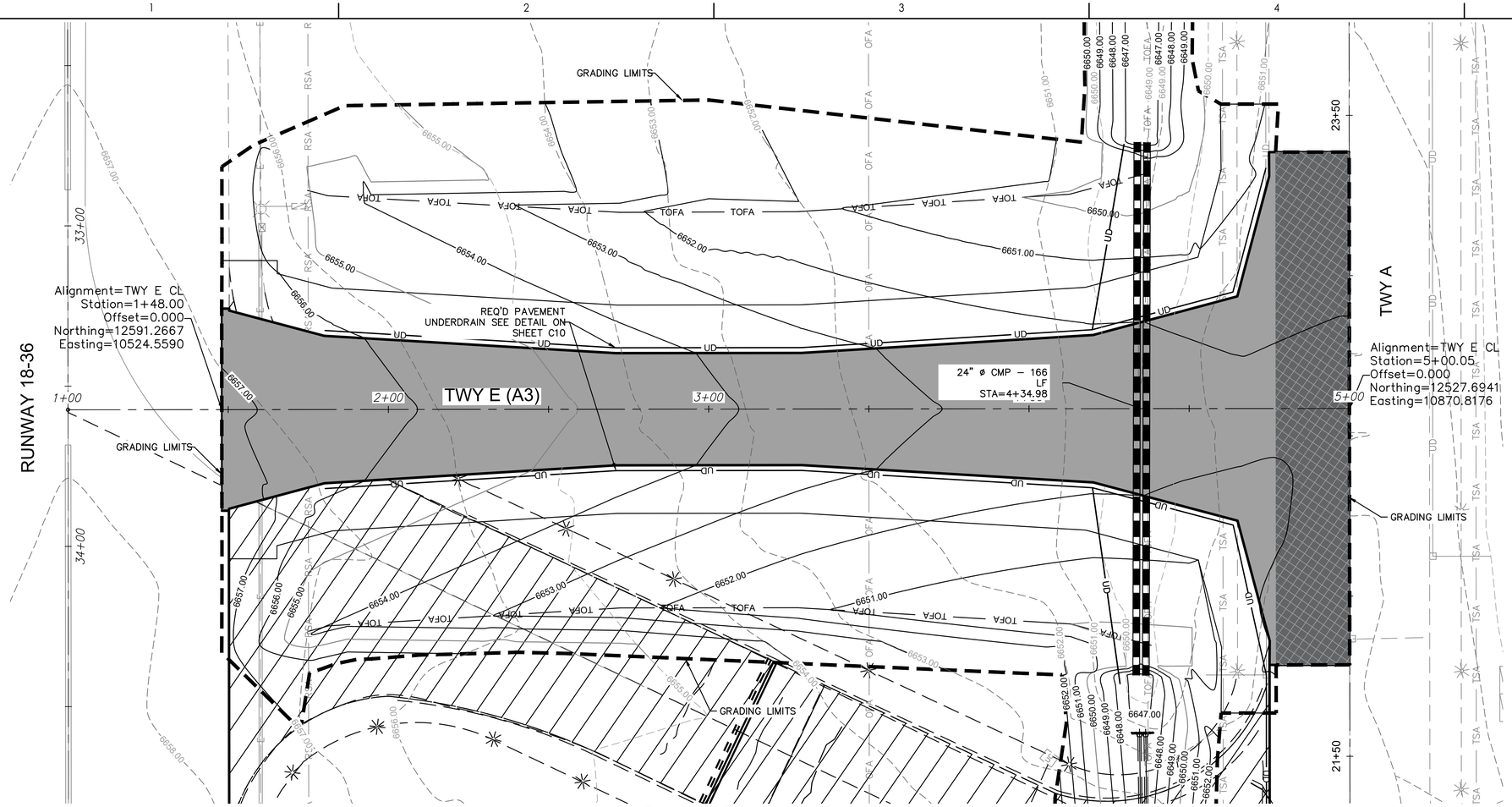

PLAN VIEW:
SCALE: 1"=20'

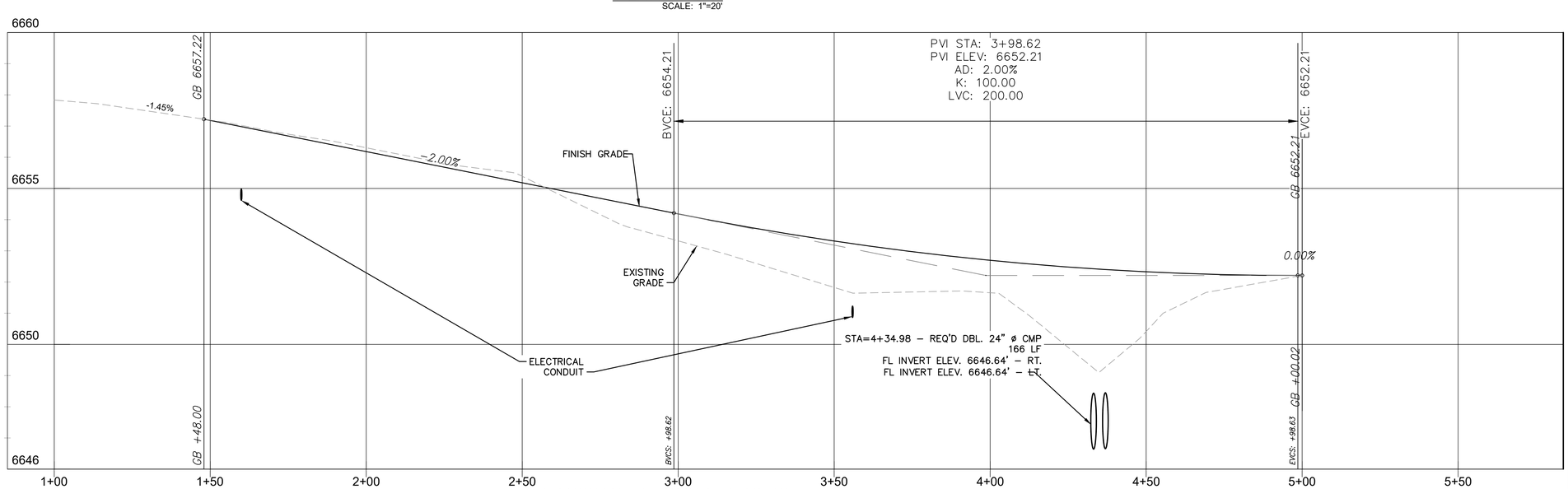

TAXIWAY E PROFILE VIEW:
SCALE: H: 1"=20'
V: 1"=2'

LEGEND:

- GRADING LIMITS
- EXISTING MAJOR CONTOURS
- EXISTING MINOR CONTOURS
- NEW MAJOR CONTOURS
- NEW MINOR CONTOURS
- NEW 24" CMP STORM DRAIN
- UD — EXISTING UNDERDRAIN
- UD — NEW UNDERDRAIN
- NEW PCC PAVEMENT
- MILL AND OVERLAY

0 20' 40'

Contact Arizona 811 at least two full working days before you begin excavation

ARIZONA811 BLUE STAKE, INC.

Call 811 or click Arizona811.com

Stantec

Stantec Consulting Services Inc.
3101 West Ray Road, Suite 300
Chandler AZ 85226 U.S.A.
Tel: (480) 687-6100
www.stantec.com

The Contractor shall verify and be responsible for all dimensions. DO NOT scale the drawing - any errors or omissions shall be reported to Stantec without delay. The Copyrights to all designs and drawings are the property of Stantec. Reproduction or use for any purpose other than that authorized by Stantec is forbidden.

Consultant

Issued	By	Appd	YYYY.MM.DD	Revision	By	Appd	YYYY.MM.DD

Permit/Seal

Register of Professional Engineer (Civil)
CERTIFICATE NO. 53829
MICHEAL J. SMEJKAL
Date Signed 03/21/2025
ARIZONA U.S.A.

Client/Project

Taxiway E Realignment
WILLIAMS, AZ U.S.A.

Project No.: 181711365

File Name: 11365-013-C4-PP

Scale: AS NOTED

RSC	BIS	RJZ	2025.03.21
Dwn.	Dsgn.	Chkd.	YYYY.MM.DD

Title

PLAN AND PROFILE

Revision:0 Sheet: 13 of 30

Drawing No.

C5

ORIGINAL SHEET - ANSI D

C:\Users\jscothran\dc\accdocs\stantec consulting\181711365_cmx_hvy_a_realign\project files\drawings\sheet_files\11365-013-c4-pp
2025.04.03 9:56:46 AM

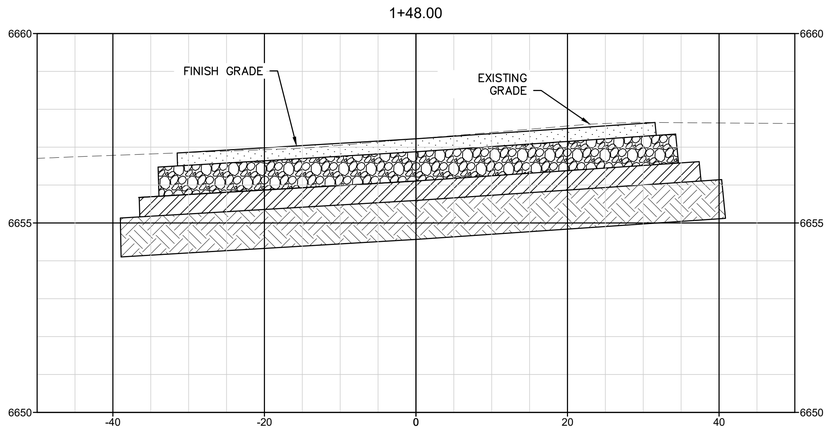

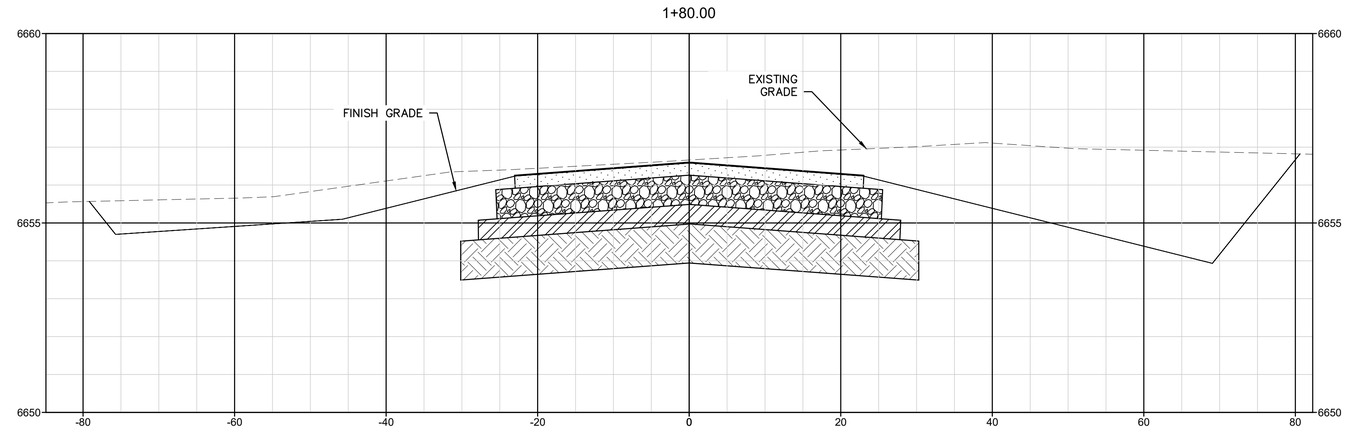

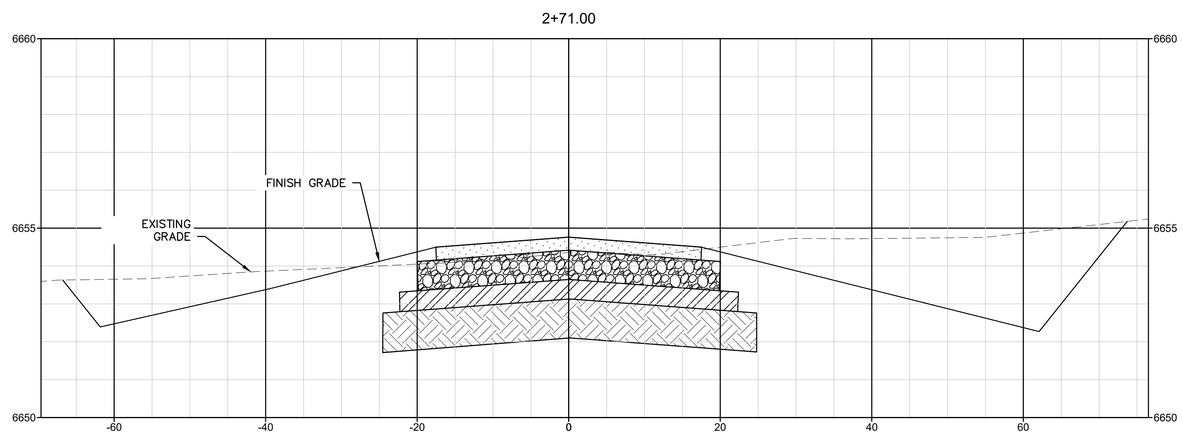

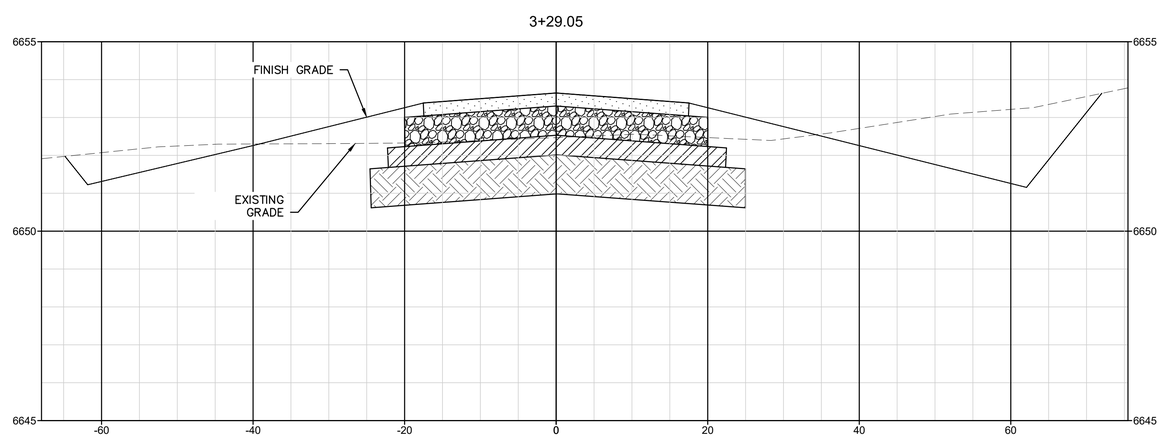

H: 1"=10'
V: 1"=2'

0 10' 20'

Contact Arizona 811 at least two full working days before you begin excavation
ARIZONA811 BLUE STAKE, INC.
Call 811 or click Arizona811.com

Stantec
Stantec Consulting Services Inc.
3133 West Frye Rd, Suite 300,
Chandler AZ 85226 U.S.A.
Tel: (480) 687-6100
www.stantec.com

The Contractor shall verify and be responsible for all dimensions. DO NOT scale the drawing - any errors or omissions shall be reported to Stantec without delay.
The Copyrights to all designs and drawings are the property of Stantec. Reproduction or use for any purpose other than that authorized by Stantec is forbidden.

Consultant

Issued	By	Appd	YYYY.MM.DD

Revision	By	Appd	YYYY.MM.DD

Permit/Seal

Registered Professional Engineer (Civil)
CERTIFICATE NO. 53829
MICHEAL J. SMEJKAL
03/21/2025
Date Signed
ARIZONA, U.S.A.

Client/Project
Taxiway E Realignment
WILLIAMS, AZ U.S.A.

Project No.: 181711365
File Name: 11365-014_15-C5_C6-XSEC

Scale: AS NOTED

RSC	MJS	AC	2025.03.21
Dwn.	Dsgn.	Chkd.	YYYY.MM.DD

Title
CROSS SECTIONS
STA 1+48 TO 3+29

Revision: 0 Sheet: 14 of 30

Drawing No.
C6

C:\Users\jacob.hron.ads\appdata\local\temp\181711365_cmx_wy_e_realign\project files\drawing\sheet files\11365-014_15-C5_C6-xsec
2025.04.03 9:37:07 AM
ORIGINAL SHEET - ANSI D

4+20.05

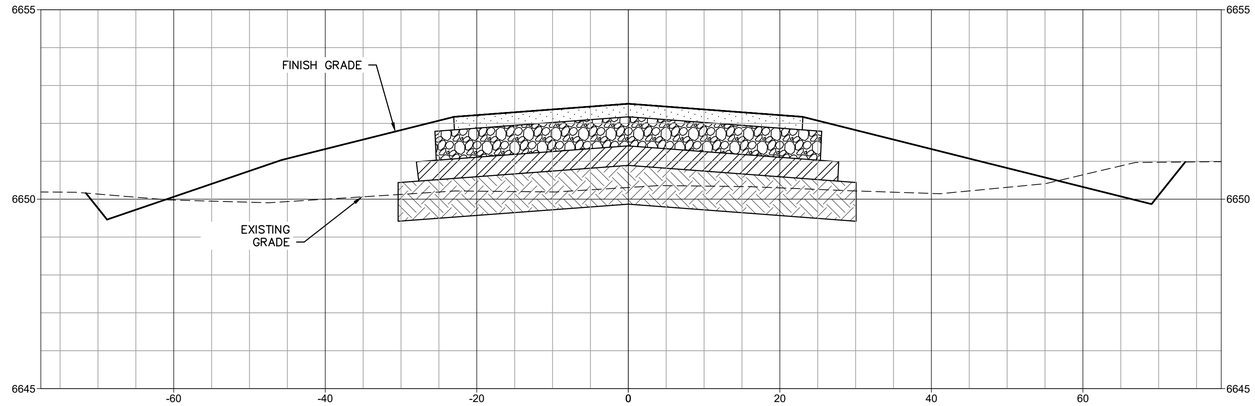

4+34.96

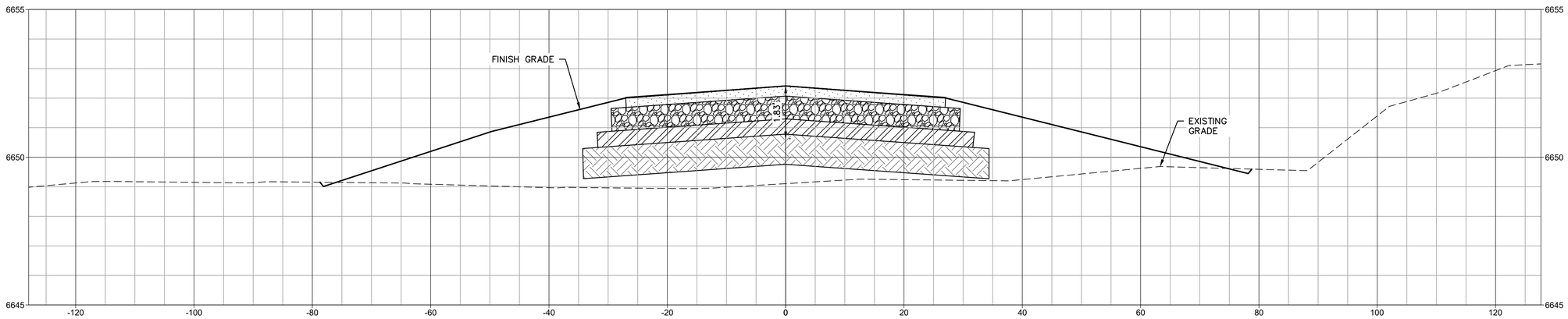

4+65.05

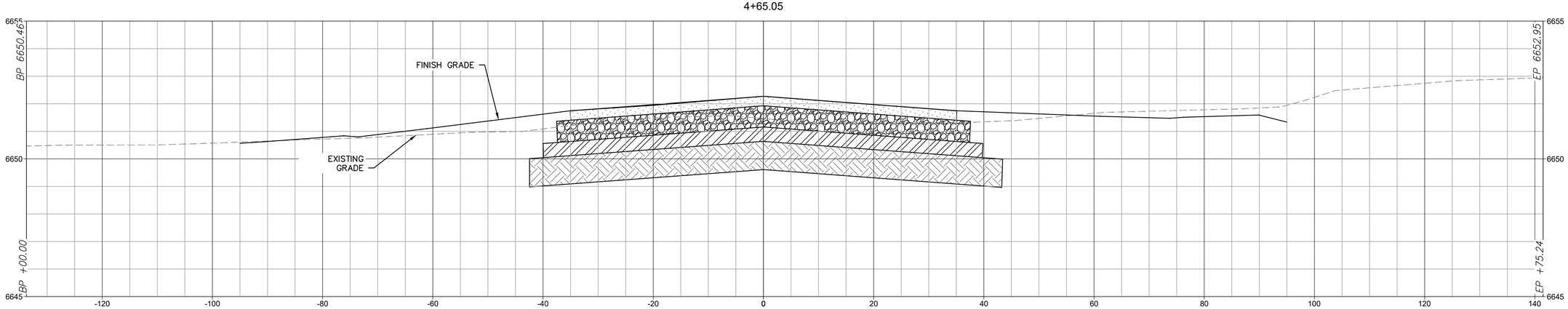

H: 1"=10'
V: 1"=2'

0 10' 20'

Contact Arizona 811 at least two full working days before you begin excavation

ARIZONA811 BLUE STAKE, INC.

Call 811 or click Arizona811.com

Stantec

Stantec Consulting Services Inc.
3133 West Frye Rd, Suite 300
Chandler AZ 85226 U.S.A.
Tel: (480) 687-6100
www.stantec.com

The Contractor shall verify and be responsible for all dimensions. DO NOT scale the drawing - use only the dimensions shown. Report any errors, omissions or conflicts to the engineer-in-charge. The Copyright to all designs and drawings are the property of Stantec. Reproduction or use for any purpose other than that authorized by Stantec is forbidden.

Consultant

Revision	By	Appd	YYYY.MM.DD

Issued	By	Appd	YYYY.MM.DD

Permit/Seal

Registered Professional Engineer (Civil)
CERTIFICATE NO. 53829
MICHEAL J. SMEJKAL
Date Signed 03/21/2025
ARIZONA U.S.A.

Client/Project

Taxiway E Realignment
WILLIAMS, AZ U.S.A.

Project No.: 181711365

File Name: 11365-014_15-C5_C6-XSEC

Scale: AS NOTED

RSC	BIS	RJZ	2025.03.21
Dwn.	Dsgn.	Chkd.	YYYY.MM.DD

Title

CROSS SECTIONS
STA 4+20 TO STA 4+65

Revision:0 Sheet: 15 of 30

Drawing No.

C7

ORIGINAL SHEET - ANSI D

c:\users\sccchson\dc\accdocs\stantec consulting\181711365_cmr_hwy_e_realign\project files\drawings\sheet_files\11365-014_15-c5_c6-xsec
2025.04.03 9:57:15 AM

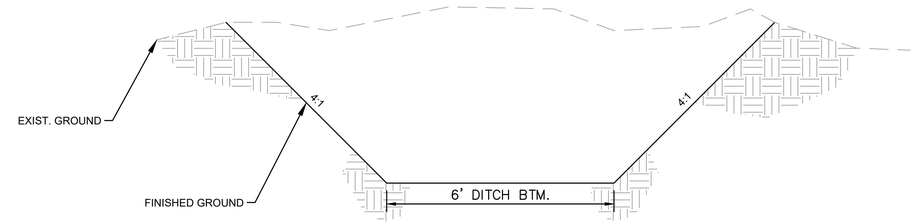

SECTION "A–A"

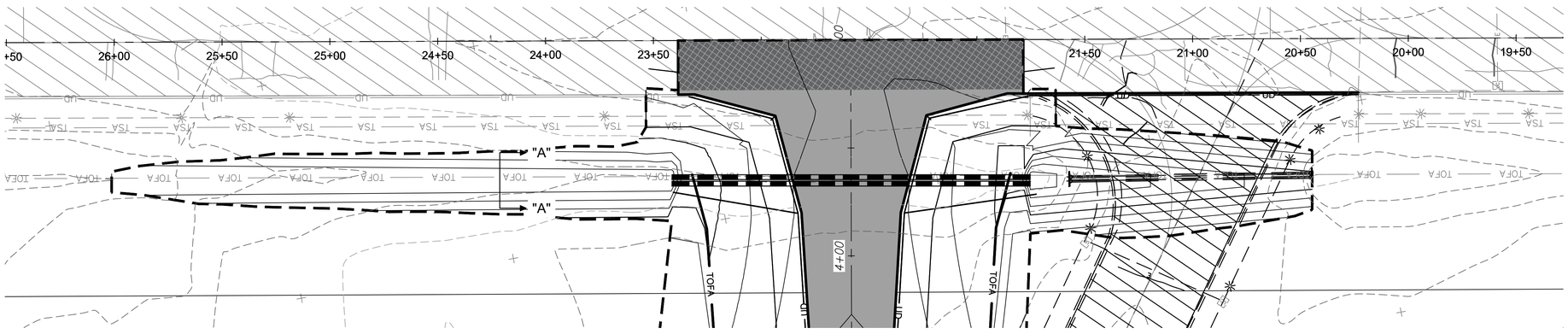

PLAN VIEW:
SCALE: 1"=30'

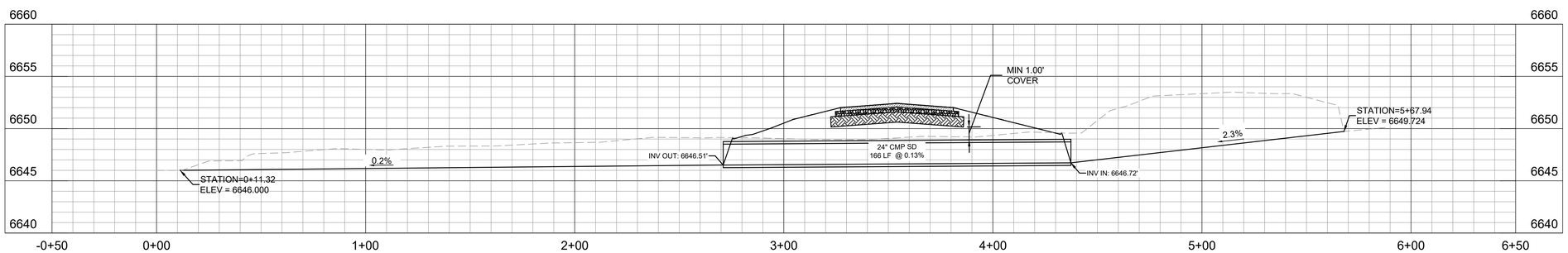

24" SD PROFILE VIEW:
SCALE: H: 1"=30'
V: 1"=2'

Contact Arizona 811 at least two full working days before you begin excavation
ARIZONA811 BLUE STAKE, INC.
Call 811 or click Arizona811.com

0 10' 20'

0 30' 60'

Stantec

Stantec Consulting Services Inc.
3133 West Frye Rd, Suite 300
Chandler AZ 85226 U.S.A.
Tel: (480) 687-6100
www.stantec.com

The Contractor shall verify and be responsible for all dimensions. DO NOT scale the drawing - use only the dimensions shown. Report any errors, omissions or conflicts to the engineer-in-charge. The Copyright to all design and drawings are the property of Stantec. Reproduction or use for any purpose other than that authorized by Stantec is forbidden.

Consultant

Issued	Revision	By	Appd	YYYY.MM.DD

Permit/Seal

Registered Professional Engineer (Civil)
CERTIFICATE NO. 53829
MICHEAL J. SMEJKAL
Date Signed 03/21/2025
ARIZONA U.S.A.

Client/Project
Taxiway E Realignment
WILLIAMS, AZ U.S.A.

Project No.: 181711365
File Name: 11365-014_15-C5_C6-XSEC

Scale: AS NOTED

RSC	BIS	RJZ	2025.03.21
Dwn.	Dsgn.	Chkd.	YYYY.MM.DD

Title
STORM DRAIN
PLAN AND PROFILE

Revision: 0 Sheet: 16 of 30

Drawing No.
C8

ORIGINAL SHEET - ANSI D

c:\users\scoshan\dc\accdocs\stantec consulting\181711365_cmr_hvy_c_redlign\project files\drawings\sheet_files\11365-014_15-C5_C6-xsec
2025.04.03 9:30 AM

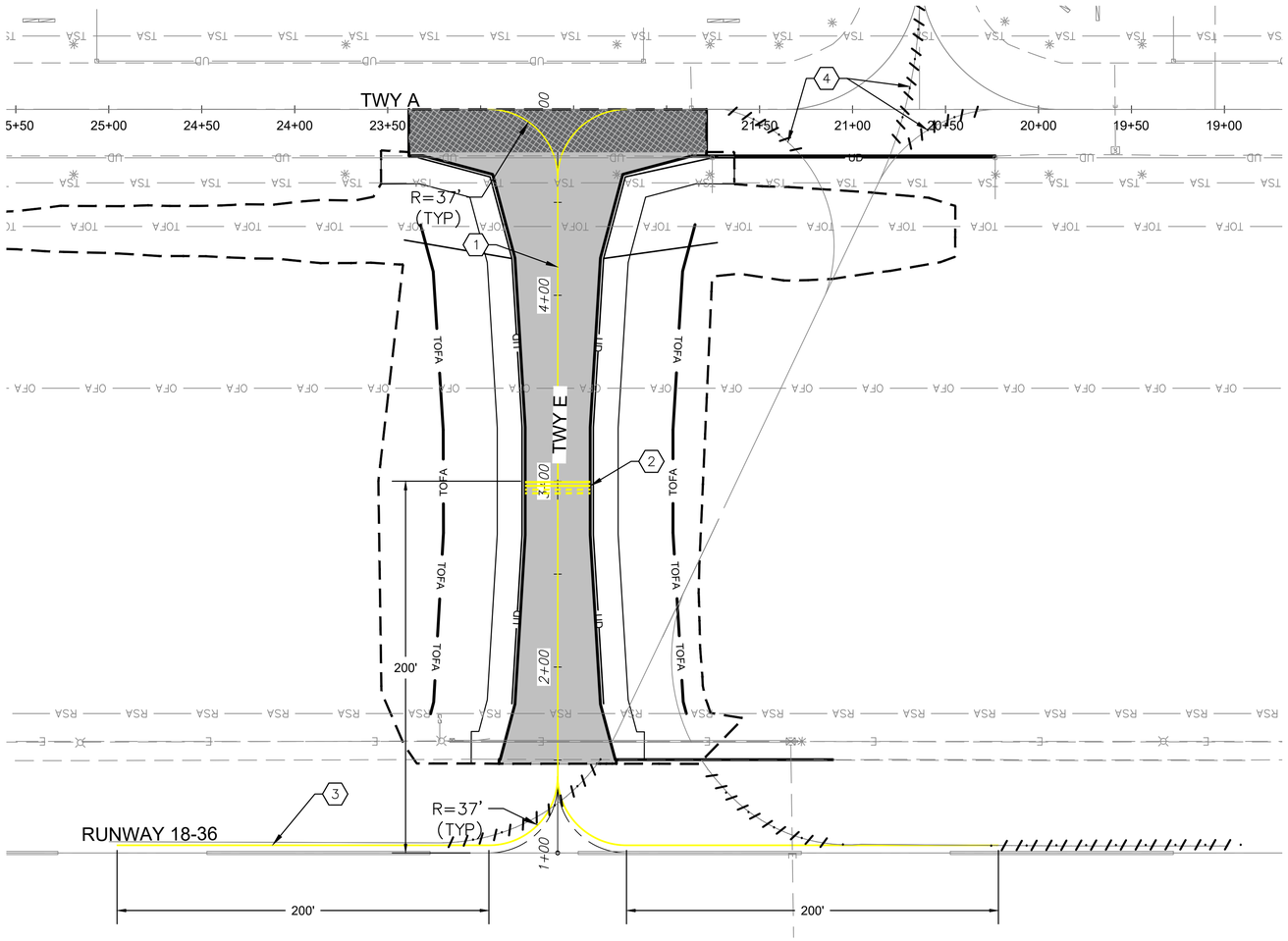

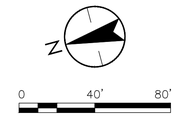

MARKING NOTES			
⬡	ITEM	UNIT	QTY.
1	INSTALL 6" WIDE YELLOW TAXIWAY CENTERLINE MARKING PER DETAIL 1 THIS SHEET	SF	275
2	INSTALL TAXIWAY HOLD BAR PER DETAIL 2 THIS SHEET	SF	55
3	INSTALL 6" WIDE YELLOW TAXIWAY CENTERLINE MARKING PER DETAIL 3 THIS SHEET	SF	200
4	OBLITERATE EXISTING 6" CENTERLINE MARKING	SF	245

GENERAL NOTES

1. PAINT WITH REFLECTIVE GLASS BEADS SHALL BE USED FOR ALL PERMANENT PAVEMENT MARKINGS. BLACK PAINT NOT REQUIRED FOR THIS PROJECT.
2. PAVEMENT MARKING DETAILS SHALL CONFORM TO THE FAA ADVISORY CIRCULAR AC–150/5340–1M–Chg–1, STANDARDS FOR AIRPORT MARKINGS, LATEST EDITION.
3. ALL TAXIWAY MARKINGS SHALL BE YELLOW.
4. FINAL MARKINGS SHALL ALIGN WITH EXISTING MARKINGS AT ALL MATCH POINTS. OVERLAP EXISTING PAVEMENT MARKINGS 5' AT ALL MATCH POINTS.
5. CONTRACTOR SHALL REINSTATE ALL PAINT MARKINGS DEGRADED/REMOVED AS A RESULT OF CONSTRUCTION AND HAULING OPERATIONS AT NO COST TO THE OWNER.
6. OBLITERATE EXISTING MARKING BY WATER BLASTING OR BEAD BLASTING. GRINDING OR PAINTING OF EXISTING MARKINGS WILL NOT BE ACCEPTABLE OBLITERATION.

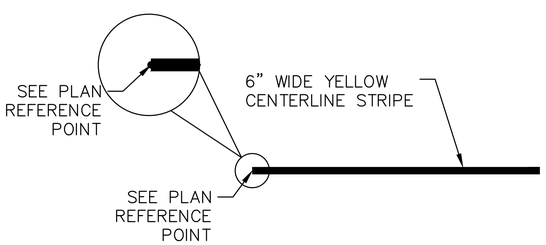

1 TAXIWAY CENTERLINE MARKING
NTS

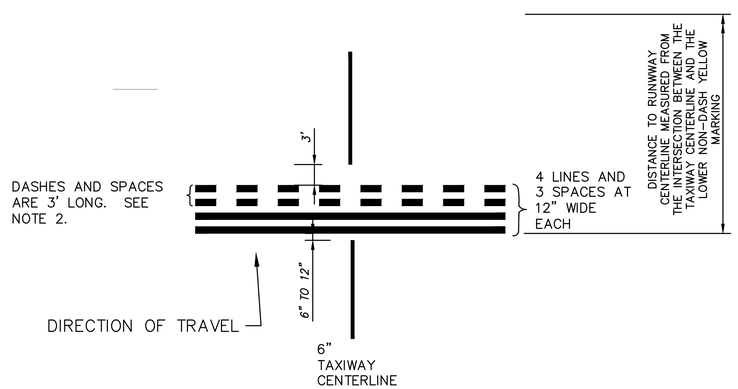

2 TAXIWAY HOLD BAR
NTS

NOTES:
1. UNLESS OTHERWISE NOTED, ALL LINES ARE YELLOW.
2. SEE PARAGRAPHS 3.3 AND 3.4, AC 150–5340–1M, FOR REDUCTIONS.

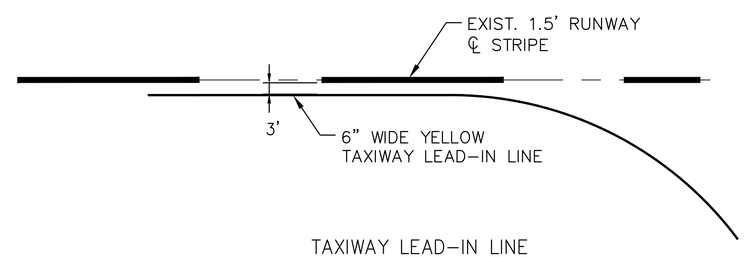

3 TAXIWAY LEAD–IN LINE SEPARATION DETAIL
NTS

Contact Arizona 811 at least two full working days before you begin excavation
ARIZONA811 BLUE STAKE, INC.
Call 811 or click Arizona811.com

Stantec
Stantec Consulting Services Inc.
3120 West Fleming Blvd., Ste. 300.
Chandler AZ 85226 U.S.A.
Tel: (480) 687-6100
www.stantec.com

The Contractor shall verify and be responsible for all dimensions. DO NOT scale the drawing - any errors or omissions shall be reported to Stantec without delay. The Copyrights to all designs and drawings are the property of Stantec. Reproduction or use for any purpose other than that authorized by Stantec is forbidden.

Consultant

Revision	By	Appd	YYYY.MM.DD

Issued	By	Appd	YYYY.MM.DD

Permit/Seal

Registered Professional Engineer (Civil)
CERTIFICATE NO. 53829
MICHEAL J. SMEJKAL
Date Signed 05/21/2025
ARIZONA U.S.A.

Client/Project
Taxiway E Realignment
WILLIAMS, AZ U.S.A.

Project No.: 181711365
File Name: 11365-016-C7-M
Scale: AS NOTED

RSC	MJS	AC	2025.03.21
Dwn.	Dsgn.	Chkd.	YYYY.MM.DD

Title
TAXIWAY MARKING AND DETAILS

Revision:0 Sheet: 17 of 30
Drawing No.
C9

c:\users\scochran\dc\accdocs\stantec consulting\181711365_crrt_hvy_c_redlign\project files\drawings\sheet_files\11365-016-C7.rvt
2025.04.03 9:27:45 AM
ORIGINAL SHEET - ANSI D

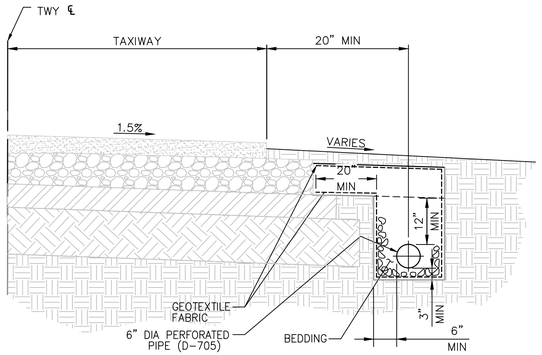

1 TYPICAL TAXIWAY UNDERDRAIN
NTS

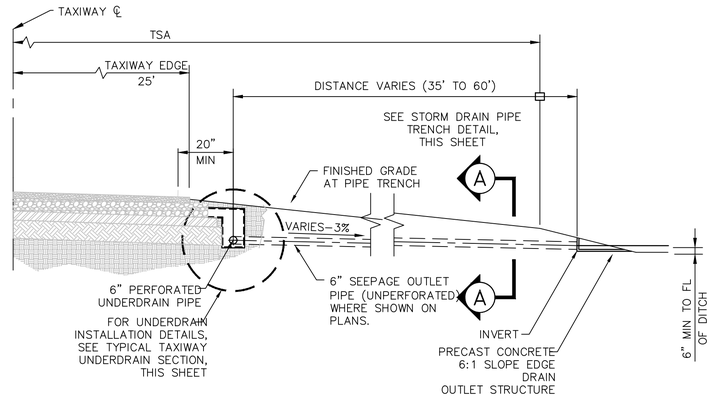

2 TYPICAL SEEPAGE OUTLET DETAIL
NTS

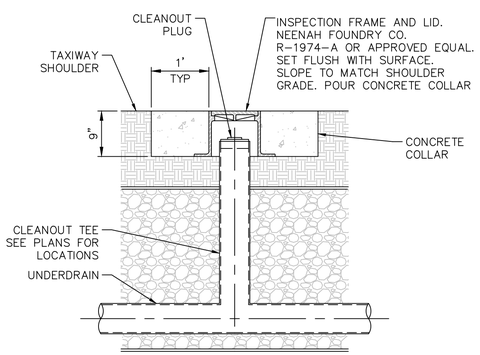

3 TYPICAL CLEANOUT TEE DETAIL
NTS

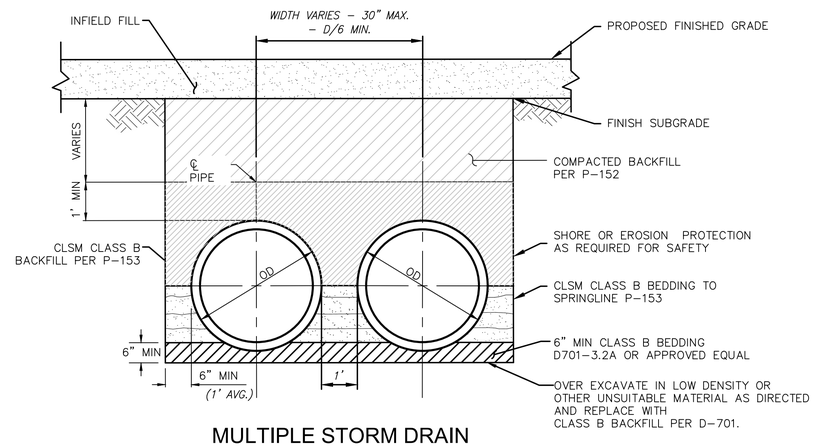

MULTIPLE STORM DRAIN PIPE TRENCH DETAIL
N.T.S.

Contact Arizona 811 at least two full working days before you begin excavation
ARIZONA811 BLUE STAKE, INC.
Call 811 or click Arizona811.com

Stantec
Stantec Consulting Services Inc.
3133 West Frye Rd, Suite 200.
Chandler AZ 85226 U.S.A.
Tel: (480) 687-6100
www.stantec.com

The Contractor shall verify and be responsible for all dimensions. DO NOT scale the drawing - any errors or omissions shall be reported to Stantec without delay. The Copyrights to all designs and drawings are the property of Stantec. Reproduction or use for any purpose other than that authorized by Stantec is forbidden.

Consultant

Revision	By	Appd	YYYY.MM.DD

Issued	By	Appd	YYYY.MM.DD

Permit/Seal

Registered Professional Engineer (Civil)
CERTIFICATE NO. 53829
MICHEAL J. SMEJKAL
Date Signed 03/21/2025
ARIZONA U.S.A.

Client/Project
Taxiway E Realignment
WILLIAMS, AZ U.S.A.

Project No.: 181711365
File Name: 11365-017-C8-DTL
Scale: AS NOTED

RSC	MJS	AC	2025.03.21
Dwn.	Dsgn.	Chkd.	YYYY.MM.DD

Title
DRAINAGE DETAILS

Revision:0 Sheet: 18 of 30
Drawing No.
C10

ELECTRICAL ABBREVIATIONS:

1/C	SINGLE CONDUCTOR
2/C	TWO CONDUCTORS
BCC	BARE COPPER CONDUCTOR (GROUND)
CCR	CONSTANT CURRENT REGULATOR
CE	CONCRETE ENCASED
CKT	CIRCUIT
DEB	DIRECT EARTH BURIED
DIA	DIAMETER
FAA	FEDERAL AVIATION ADMINISTRATION
GRS	GALVANIZED RIGID STEEL
LED	LIGHT EMITTING DIODE
LF	LINEAR FEET
LFMC	LIQUID–TIGHT FLEXIBLE METAL CONDUIT
NPI	NON–PAY ITEM
PAPI	PRECISION APPROACH PATH INDICATOR
PVC	POLY–VINYL CHLORIDE
REIL	RUNWAY END INDICATOR LIGHT
SE	SLURRY ENCASED
SGN	SIGN
TYP	TYPICAL
XFMR	TRANSFORMER

ELECTRICAL LEGEND:

(UNLESS OTHERWISE NOTED ON PLANS)

- PVC W/#8–5KV L–824 TYPE "C" CABLE PER INDICATED LIGHTING CIRCUIT. (QUANTITY AND SIZE AS INDICATED ON PLAN SHEETS) (/ – INDICATES NUMBER OF CONDUCTORS)
- E — NEW ELECTRICAL CONDUIT AND CONDUCTOR
- E — EXISTING ELECTRICAL CONDUIT AND CONDUCTOR
- SPLICE POINT OF EXISTING AND NEW CONDUIT AND CONDUCTOR
- EXISTING HANDHOLE/PULLBOX
- EXISTING RUNWAY EDGE LIGHT
- EXISTING TAXIWAY EDGE LIGHT
- EXISTING AIRFIELD GUIDANCE SIGN
- NEW L–867B JUNCTION CAN
- NEW 2'x3'x3' CONCRETE HANDHOLE
- NEW AIRFIELD GUIDANCE SIGN
- NEW L–861T(L) LED ELEVATED TAXIWAY EDGE LIGHT ON NEW L–867 BASE

SELECTED FAA ADVISORY CIRCULARS FOR AIRPORT PROJECTS (MOST RECENT VERSION):

150/5340–18	STANDARDS FOR AIRPORT SIGN SYSTEMS
150/5340–30	DESIGN & INSTALLATION DETAILS FOR AIRPORT VISUAL AIDS
150/5345–7	SPECIFICATION FOR L–824 UNDERGROUND ELECTRICAL CABLE FOR AIRPORT LIGHTING CIRCUITS
150/5345–26	SPECIFICATION FOR L–823 PLUG AND RECEPTACLE, CABLE CONNECTORS
150/5345–42	SPECIFICATION FOR AIRPORT LIGHT BASES, TRANSFORMER HOUSINGS, JUNCTION BOXES, AND ACCESSORIES
150/5345–46	SPECIFICATION FOR RUNWAY AND TAXIWAY LIGHT FIXTURES
150/5345–47	SPECIFICATION FOR SERIES TO SERIES ISOLATION TRANSFORMERS FOR AIRPORT LIGHTING SYSTEMS
150/5345–53	AIRPORT LIGHTING EQUIPMENT CERTIFICATION PROGRAM
150/5370–2	OPERATIONAL SAFETY ON AIRPORTS DURING CONSTRUCTION
150/5370–10	STANDARDS FOR SPECIFYING CONSTRUCTION OF AIRPORTS
ADDENDUM	AIRPORT LIGHTING EQUIPMENT CERTIFICATION PROGRAM (PUBLISHED MONTHLY AND LISTING APPROVED SUPPLIERS)

SHEET INDEX:

E1.1	ELECTRICAL LEGEND
E1.2	ELECTRICAL NOTES
E2.1	AIRFIELD ELECTRICAL DEMOLITION PLAN
E3.1	AIRFIELD ELECTRICAL PLAN
E4.1	AIRFIELD GUIDANCE SIGNAGE SCHEDULE
E5.1	ELECTRICAL DETAILS – DUCTBANKS
E5.2	ELECTRICAL DETAILS – GROUNDING
E5.3	ELECTRICAL DETAILS – 5KV CABLE SPLICE
E5.4	ELECTRICAL DETAILS – CONCRETE SIGN BASE
E5.5	ELECTRICAL DETAILS – 2'X3' HANDHOLE
E5.6	ELECTRICAL DETAILS – JUNCTION CAN
E5.7	ELECTRICAL DETAILS – ELEVATED EDGE LIGHT

Contact Arizona 811 at least two full working days before you begin excavation
ARIZONA811 BLUE STAKE, INC.
Call 811 or click Arizona811.com

Stantec
Stantec Consulting Services Inc.
3133 West Frye Road, Suite 200
Chandler AZ 85226 U.S.A.
Tel: (480) 687-6100
www.stantec.com

The Contractor shall verify and be responsible for all dimensions. DO NOT scale the drawing - any errors or omissions shall be reported to Stantec without delay. The Copyrights to all designs and drawings are the property of Stantec. Reproduction or use for any purpose other than that authorized by Stantec is forbidden.

Consultant
CR engineers
16719 East Palisades Blvd., Suite 202
Fountain Hills, AZ 85268
Phone: (480) 816-5541
Fax: (480) 816-5540
www.crengs.com

Revision	By	Appd	YYYY.MM.DD

Issued	By	Appd	YYYY.MM.DD

Permit/Seal

Registered Professional Engineer (Electrical) CERTIFICATE NO. 36696 CATHERINE ALCORN Date Signed 21, MAR 25 ARIZONA, U.S.A.

Client/Project

Taxiway E Realignment
WILLIAMS, AZ U.S.A.

Project No.: 181711365

File Name: 23009 E1.1 TE

Scale: NTS

JBW	RD	CA	2025.03.21
Dwn.	Dsgn.	Chkd.	YYYY.MM.DD

Title

ELECTRICAL LEGEND

Revision: 0 Sheet: 19 of 30

Drawing No.

E1.1

ELECTRICAL CONSTRUCTION PHASING NOTES

1. CONTRACTOR SHALL COORDINATE ALL WORK WITH AIRPORT MAINTENANCE, AIRPORT OPERATIONS, AND THE ENGINEER AS NECESSARY.
2. CONTRACTOR SHALL GIVE 72 HOURS NOTICE PRIOR TO WORKING ON OR AROUND ANY DUCTBANKS, HANDHOLES, ETC.
3. CONTRACTOR SHALL MAINTAIN OR HAVE SUFFICIENT MATERIAL/EQUIPMENT REQUIRED TO PROVIDE TEMPORARY LIGHTING AND CIRCUIT EXTENSIONS. THIS INCLUDES, BUT IS NOT LIMITED TO FIXTURES, TRANSFORMERS, BASES, CONDUIT, L–824 CABLE & L–823 SPLICE KITS. THESE ITEMS WILL NOT BE AVAILABLE FROM THE AIRPORT MAINTENANCE SHOP.
4. THE CONTRACTOR SHALL MAINTAIN QUALIFIED PERSONNEL WITH THE APPROPRIATE EQUIPMENT, FOR THE INSTALLATION AND SPLICING OF AIRFIELD LIGHTING. SUCH PERSONNEL SHALL BE CAPABLE OF 60 MINUTE RESPONSE TIME IF THEY ARE NOT ALREADY PRESENT ON THE AIRFIELD.
5. TURN OFF AND COVER EXISTING SIGNAGE THAT MAY POTENTIALLY MISDIRECT AIRCRAFT MOVEMENT INTO CLOSED AREAS BARRICADED FOR CONSTRUCTION. SIGNAGE REQUIRING PARTIAL COVERAGE WITH TAXIWAY LOCATION PANELS REMAINING VISIBLE SHALL REMAIN ON WITH ONLY DIRECTIONAL PORTIONS COVERED WITH SECTIONS OF DARK COLORED TARP OR DOUBLE–LAYERED BURLAP THAT DOES NOT PERMIT VISIBILITY OF COVERED PORTION OF ARRAY DAY OR NIGHT. COVERS SHALL BE SECURELY HELD IN PLACE BY RATCHETING LASHING STRAPS, NO TAPE OR ADHESIVES WILL BE PERMITTED. SEE PHASING PLANS FOR PLACEMENT OF SIGN COVERS.
6. COVER EXISTING ELEVATED EDGE LIGHT FIXTURES IN CLOSED AREA BARRICADED FOR CONSTRUCTION WITH 4" PVC PIPE. COVER SHALL EXTEND 2" MIN. ABOVE TOP OF FIXTURE.
7. PROVIDE ANY TEMPORARY AIRFIELD CIRCUIT JUMPERS REQUIRED TO MAINTAIN OPERATION OF ALL CIRCUITS AFFECTED BY CONSTRUCTION PRIOR TO START OF DEMOLITION. TEMPORARY CIRCUIT JUMPERS SHALL BE SLEEVED IN 2" CONDUIT, SANDBAGGED OR SECURED TO LOW–LEVEL BARRICADES. TEMPORARY CIRCUIT JUMPERS MAY BE ROUTED THROUGH NEW TAXIWAY CROSSINGS OR EXISTING SPARE CONDUITS AS REQUIRED AND SHALL BE COMPLETELY REMOVED WHEN NO LONGER REQUIRED FOR OPERATION. TEMPORARY JUMPER PLACEMENT SHALL NOT AFFECT AIRCRAFT MOVEMENT OR AIRPORT OPERATIONS.
8. UNCOVER SIGNS AND EDGE LIGHT FIXTURES, REMOVE TEMPORARY JUMPERS, AND VERIFY OPERATION AT THE END OF PROJECT.

ELECTRICAL GENERAL NOTES

1. GROUNDS RODS AND COUNTERPOISE WIRE ARE CONSIDERED INCIDENTAL TO FIXTURE AND CONDUIT INSTALLATION.
2. ELECTRICAL CONTRACTOR SHALL COORDINATE ALL DEMOLITION AND CONSTRUCTION WITH CIVIL CONTRACTOR TO REDUCE CONFLICTS THAT AFFECT CONSTRUCTION PHASING AND SCHEDULING.
3. CONTRACTOR SHALL FIELD VERIFY ALL FIXTURE STATION AND OFFSETS AND CONFIRM ALL LOCATIONS ARE WITHIN SPECIFICATION TOLERANCES.

ELECTRICAL DEMOLITION GENERAL NOTES:

1. WITHIN AREAS OF DEMOLITION, AND AS OTHERWISE SHOWN, CAREFULLY REMOVE IDENTIFIED LIGHT FIXTURES, BASES, ISOLATION TRANSFORMERS, HAND HOLES AND OTHER INDICATED ITEMS.
2. CABLE REMOVAL
   - A. DIRECT BURIAL: REMOVE FROM WITHIN MANHOLES AND HANDHOLES AND REMOVE IN AREAS WHERE EXCAVATION REQUIRES DISTURBING.
   - B. IN CONDUIT: REMOVE COMPLETELY BETWEEN NEAREST BASES, HANDHOLES OR MANHOLES.
   - C. RUNWAYS: REMOVE AND REPLACE FOR RECONNECTION INCREMENTALLY DURING EACH SHIFT TO MAINTAIN CIRCUIT OPERATION AS REQUIRED BY AIRPORT.
3. AT INDICATED DEVICES TO BE REMOVED OR IN DEMOLITION AREAS INDICATED, REMOVE ALL CONDUCTORS BACK TO NEAREST FIXTURE BASE OR HANDHOLE OUTSIDE DEMOLITION AREA.
4. FIXTURES, CABLES, CONDUITS, DUCTS, ETC. WHICH ARE NOT SPECIFICALLY INDICATED TO BE REMOVED (OR WHICH ARE SHOWN TO REMAIN WITHIN AREAS OF GENERAL DEMOLITION) SHALL REMAIN IN–PLACE AND FUNCTIONAL.
5. CONTRACTOR SHALL VERIFY EQUIPMENT AND CABLE DESIGNATIONS AND STATUS PRIOR TO REMOVAL OR DISCONNECTING.
6. ALL REMOVED LIGHT FIXTURES, BASES, ISOLATION TRANSFORMERS, AND SIGNS SHALL BE SALVAGED AND DELIVERED TO AIRPORT OPERATIONS AND MAINTENANCE. ALL OTHER REMOVED MATERIAL SHALL BECOME THE PROPERTY OF THE CONTRACTOR AND SHALL BE REMOVED FROM THE SITE AND PROPERLY DISPOSED OF IN ACCORDANCE WITH LOCAL ORDINANCES.
7. DRAWINGS MAY NOT DETAIL ALL EXISTING FACILITIES IN AREAS OF DEMOLITION. CONTRACTOR SHALL REVIEW THE SITE AND RECORD DRAWINGS TO VERIFY THE DEMOLITION EFFORT INVOLVED.
8. CONTRACTOR SHALL BE REQUIRED TO HAVE A PRIVATE "ON–SITE" UTILITY LOCATING COMPANY AND POTHOLE EXISTING UTILITY LINES AS NEEDED.

Contact Arizona 811 at least two full working days before you begin excavation
ARIZONA811 BLUE STAKE, INC.
Call 811 or click Arizona811.com

Stantec
Stantec Consulting Services Inc.
3133 West Frye Road, Suite 300
Chandler AZ 85226 U.S.A.
Tel: (480) 687-6100
www.stantec.com

The Contractor shall verify and be responsible for all dimensions. DO NOT scale the drawing - any errors or omissions shall be reported to Stantec without delay. The Copyrights to all designs and drawings are the property of Stantec. Reproduction or use for any purpose other than that authorized by Stantec is forbidden.

Consultant

CR engineers
16719 East Palisades Blvd., Suite 202
Fountain Hills, AZ 85268
Phone: (480) 816-5541
Fax: (480) 816-5540
www.crengr.com

Issued	By	Appd	YYYY.MM.DD

Revision	By	Appd	YYYY.MM.DD

Permit/Seal

Registered Professional Engineer (Electrical)
CERTIFICATE NO. 36696
CATHERINE ALCORN
Date Signed 27, MAR 25
ARIZONA, U.S.A.

Client/Project
Taxiway E Realignment
WILLIAMS, AZ U.S.A.

Project No.: 181711365
File Name: 23009 E1.2 TE
Scale: NTS

JBW	RD	CA	2025.03.21
Dwn.	Dsgn.	Chkd.	YYYY.MM.DD

Title
ELECTRICAL NOTES

Revision: 0 Sheet: 20 of 30
Drawing No.
E1.2

Q:\projects\23000\23009 ho class (crm) taxiway e realignment and airfield signage\cad\cad sheets\taxiway e realignment\23009 e1.2 te
2025.03.20 2:52:54 PM
ORIGINAL SHEET - ANSI D

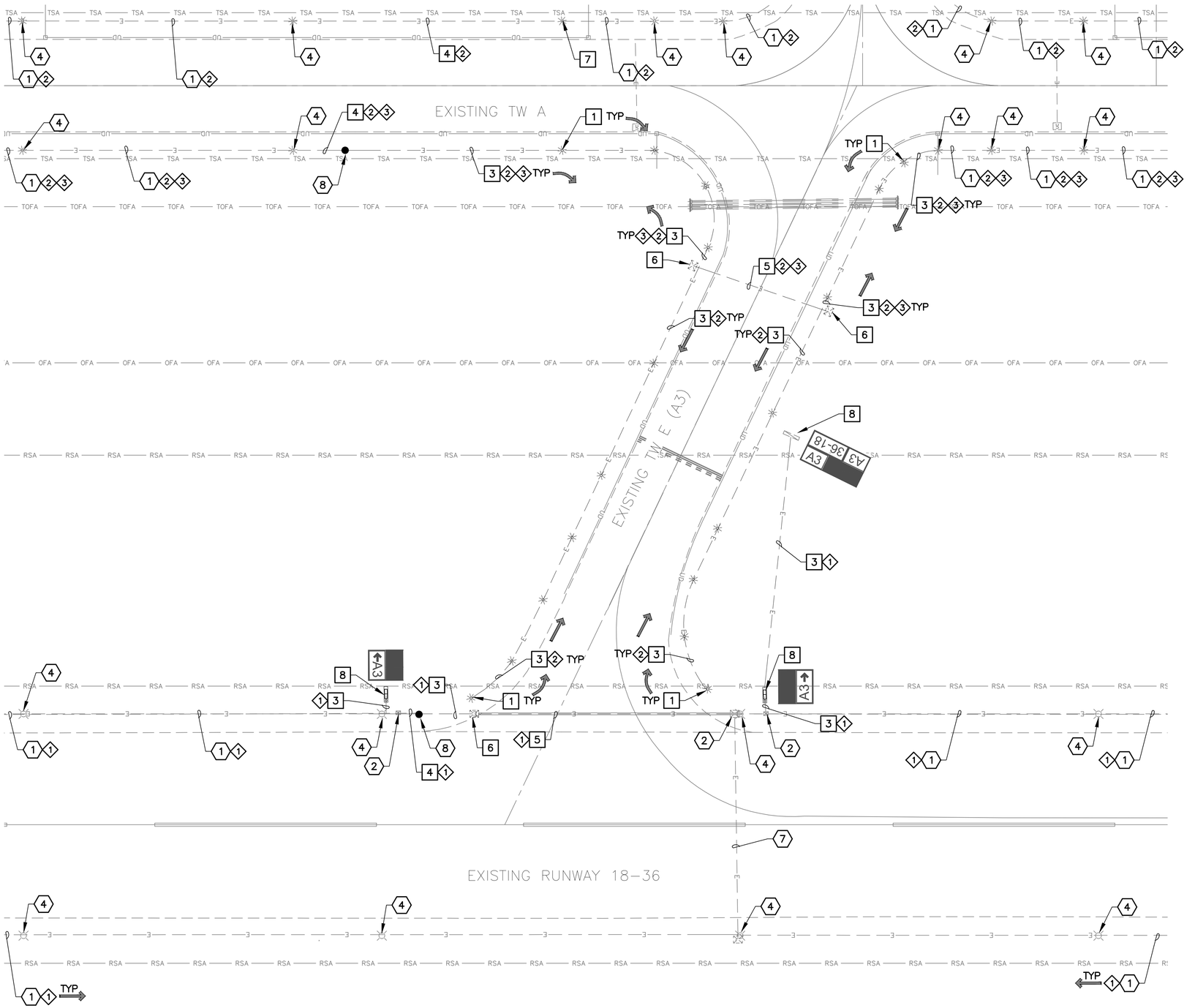

REMOVAL NOTE

1. REMOVE AND SALVAGE EXISTING TAXIWAY EDGE LIGHT AND BASE CAN. (19 TOTAL)
3. EXCAVATE AND REMOVE EXISTING CONDUIT AND CONDUCTOR(S) (1,034 LF)
4. REMOVE EXISTING CONDUCTOR(S), CONDUIT TO REMAIN. (197 LF)
5. EXCAVATE AND REMOVE EXISTING CONCRETE ENCASED DUCTBANK (228 LF)
6. EXCAVATE AND REMOVE EXISTING PULLBOX/HANDHOLE (3 TOTAL)
7. REMOVE AND SALVAGE EXISTING TAXIWAY EDGE LIGHT – BASE CAN TO REMAIN (1 TOTAL)
8. REMOVE AND SALVAGE EXISTING AIRFIELD GUIDANCE SIGN AND ISOLATION TRANSFORMER – REMOVE EXISTING CONCRETE SIGN BASE (3 TOTAL)

REFERENCE NOTE

1. EXISTING CONDUIT AND CONDUCTOR TO REMAIN – PROTECT IN PLACE
2. EXISTING PULLBOX/HANDHOLE TO REMAIN – PROTECT IN PLACE
4. EXISTING ELEVATED LIGHT FIXTURE TO REMAIN – PROTECT IN PLACE
5. EXISTING JUNCTION CAN TO REMAIN – PROTECT IN PLACE
6. EXISTING CONDUIT TO REMAIN – PROTECT IN PLACE
7. EXISTING DUCTBANK TO REMAIN – PROTECT IN PLACE
8. APPROXIMATE SPLICE POINT OF EXISTING CONDUIT AND CONDUCTOR

CIRCUIT IDENTIFICATION

1. RUNWAY
2. TAXIWAY
3. PAPI

Contact Arizona 811 at least two full working days before you begin excavation

ARIZONA811 BLUE STAKE, INC.

Call 811 or click Arizona811.com

Stantec

Stantec Consulting Services Inc.
3133 West Frye Road, Suite 200
Chandler AZ 85226 U.S.A.
Tel: (480) 687-6100
www.stantec.com

The Contractor shall verify and be responsible for all dimensions. DO NOT scale the drawing - any errors or omissions shall be reported to Stantec without delay. The Copyrights to all designs and drawings are the property of Stantec. Reproduction or use for any purpose other than that authorized by Stantec is forbidden.

Consultant

CR engineers
16719 East Palisades Blvd., Suite 202
Fountain Hills, AZ 85268
Phone: (480) 816-5541
Fax: (480) 816-5540
www.crengs.com

Issued	By	Appd	YYYY.MM.DD

Revision	By	Appd	YYYY.MM.DD

Permit/Seal

Registered Professional Engineer (Electrical) CERTIFICATE NO. 36696 CATHERINE ALCORN Date Signed 21 MAR 25 ARIZONA, U.S.A.

Client/Project

Taxiway E Realignment
WILLIAMS, AZ U.S.A.

Project No.: 181711365

File Name: 23009 E2.1 TE - INVERTED

Scale: 1" = 30'

JBW	RD	CA	2025.03.21
Dwn.	Dsgn.	Chkd.	YYYY.MM.DD

Title

AIRFIELD ELECTRICAL DEMOLITION PLAN

Revision: 0 Sheet: 21 of 30

Drawing No.

E2.1

o:\project\1\23001-23099\ho cdot\ (crm)\taxiway e realignment and airfield signage\cad\cad sheets\taxiway e realignment\23009 e2.1 te - inverted
2025.03.20 2:53:10 PM
ORIGINAL SHEET - ANSI D

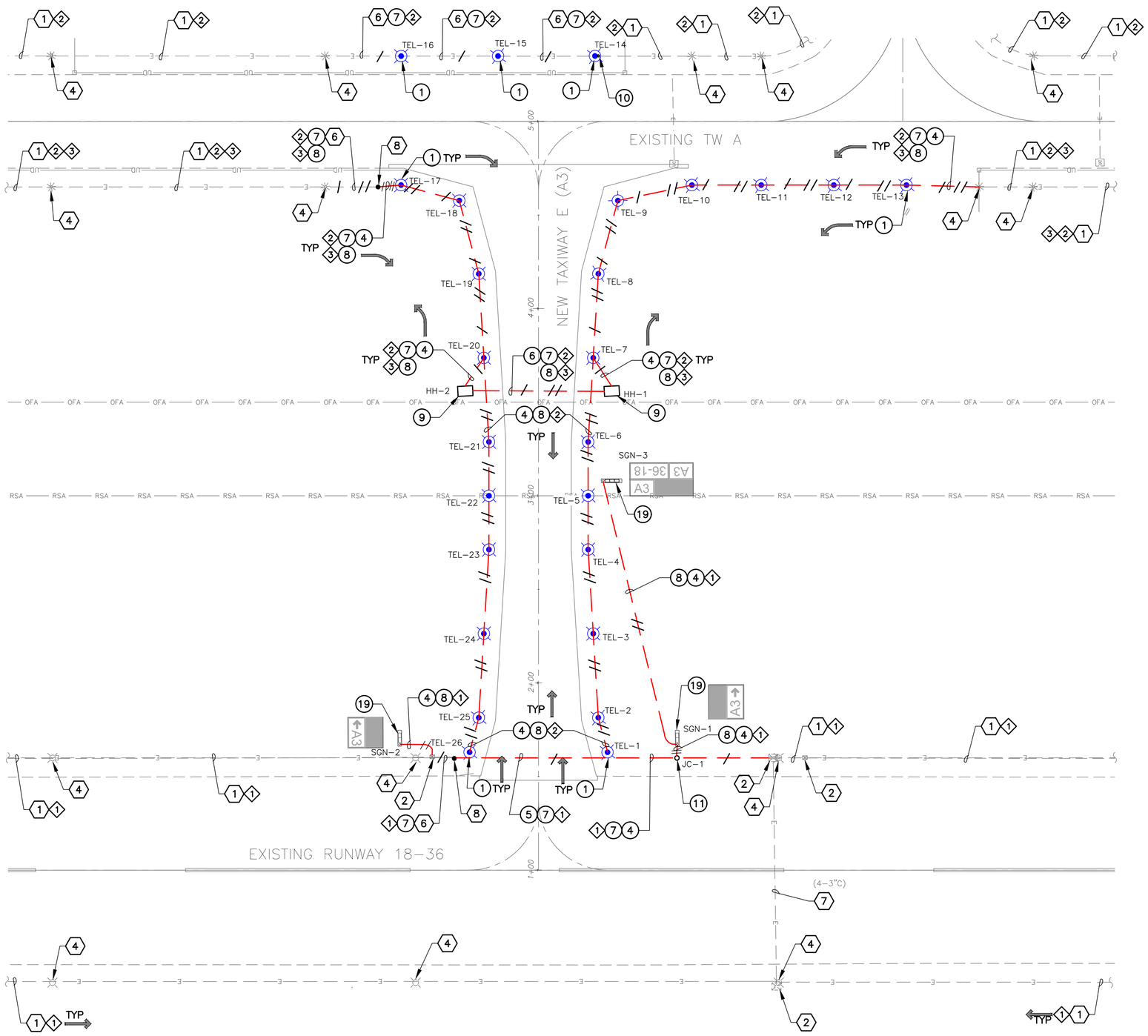

CONSTRUCTION NOTE

1. NEW L–861T(L) LED TAXIWAY EDGE LIGHT (24") AND ISOLATION TRANSFORMER ON NEW L–867 BASE CAN (26 TOTAL)
4. 1–2"C DEB (1,241 LF)
5. 1–2"C CE (95 LF)
6. 4–2"C CE (90 LF)
7. NEW 1/C, #8 5KV L–824, TYPE "C" AIRFIELD LIGHTING CABLE (1,195 LF)
8. NEW 2/C, #8 5KV L–824, TYPE "C" AIRFIELD LIGHTING CABLE (1,530 LF)
9. NEW 2'x3'x3' HANDHOLE WITH AIRCRAFT–RATED LID WITH SPRING ASSISTED OPENING (2 TOTAL)
10. NEW BLANK COVER ON EXISTING L–867 BASE CAN (1 TOTAL)
11. NEW L–867B (12" DIA.) JUNCTION CAN WITH BLANK COVER (1 TOTAL)
19. INSTALL SALVAGED AIRFIELD GUIDANCE SIGN AND ISOLATION TRANSFORMER ON NEW SIGN BASE. (3 TOTAL)

REFERENCE NOTE

1. EXISTING CONDUIT AND CONDUCTOR
2. EXISTING HANDHOLE/PULLBOX
3. EXISTING AIRFIELD GUIDANCE SIGN
4. EXISTING ELEVATED LIGHT FIXTURE
5. EXISITNG JUNCTION CAN
6. EXISTING CONDUIT
7. EXISTING DUCTBANK
8. APPROXIMATE SPLICE OF POINT OF EXISTING CONDUIT AND COUNTERPOISE

CIRCUIT IDENTIFICATION

1. RUNWAY
2. TAXIWAY
3. PAPI

Contact Arizona 811 at least two full working days before you begin excavation

ARIZONA811 BLUE STAKE, INC.

Call 811 or click Arizona811.com

Stantec

Stantec Consulting Services Inc.
3133 West Frye Road, Suite 300
Chandler AZ 85226 U.S.A.
Tel: (480) 687-6100
www.stantec.com

The Contractor shall verify and be responsible for all dimensions. DO NOT scale the drawing - any errors or omissions shall be reported to Stantec without delay. The Copyrights to all designs and drawings are the property of Stantec. Reproduction or use for any purpose other than that authorized by Stantec is forbidden.

Consultant

CR engineers
16719 East Palisades Blvd., Suite 202
Fountain Hills, AZ 85268
Phone: (480) 816-5541
Fax: (480) 816-5540
www.crengs.com

Issued	By	Appd	YYYY.MM.DD

Revision	By	Appd	YYYY.MM.DD

Permit/Seal

Registered Professional Engineer (Electrical) CERTIFICATE NO. 36696 CATHERINE ALCORN Date Signed 21, MAR 25 ARIZONA, U.S.A.

Client/Project

Taxiway E Realignment
WILLIAMS, AZ U.S.A.

Project No.: 181711365

File Name: 23009 E3.1 TE - INVERTED

Scale: 1" = 30'

JBW	RD	CA	2025.03.21
Dwn.	Dsgn.	Chkd.	YYYY.MM.DD

Title

AIRFIELD ELECTRICAL PLAN

Revision: 0 Sheet: 22 of 30

Drawing No.

E3.1

o:\project\1\23001-23009 ho cdot (crm) taxiway e realignment and airfield signage\cad\cad sheets\taxiway e realignment\23009 e3.1 te - inverted
2025.03.20 2:53:23 PM
ORIGINAL SHEET - ANSI D

H.A. CLARK MEMORIAL AIRPORT AIRFIELD GUIDANCE SIGN SCHEDULE

SIGN NUMBER	CIRCUIT	SIGN WITH FACE DESIGNATIONS	FACE A MESSAGE	FACE B MESSAGE	FACE A COLOR	FACE B COLOR	SIZE	STYLE	CLASS	SHEET NUMBER	SCOPE OF WORK
SGN–1	RWY 36–18	A B A3 →	EXISTING							E3.1	INSTALL SALVAGED AIRFIELD GUIDANCE SIGN AND ISOLATION TRANSFORMER ON NEW SIGN BASE.
SGN–2	RWY 36–18	A B ← A3	EXISTING							E3.1	INSTALL SALVAGED AIRFIELD GUIDANCE SIGN AND ISOLATION TRANSFORMER ON NEW SIGN BASE.
SGN–3	RWY 36–18	A A3 B A3 36-18	EXISTING							E3.1	INSTALL SALVAGED AIRFIELD GUIDANCE SIGN AND ISOLATION TRANSFORMER ON NEW SIGN BASE.

TAXIWAY EDGE LIGHTS

NUMBER	STATION	OFFSET
TEL–1	01+62.99	36.85' RT
TEL–2	01+81.45	31.93' RT
TEL–3	02+26.36	29.21' RT
TEL–4	02+71.27	26.50' RT
TEL–5	03+00.02	26.50' RT
TEL–6	03+28.77	26.50' RT
TEL–7	03+73.69	29.21' RT
TEL–8	04+18.60	31.93' RT
TEL–9	04+57.69	42.35' RT
TEL–10	04+65.98	81.92' RT
TEL–11	04+65.98	118.96' RT
TEL–12	04+65.98	157.75' RT
TEL–13	04+65.98	196.54' RT
TEL–14	05+34.95	30.14' RT
TEL–15	05+34.92	21.64' LT
TEL–16	05+34.89	73.41' LT
TEL–17	04+65.98	73.44' LT
TEL–18	04+57.69	42.35' LT
TEL–19	04+18.60	31.93' LT
TEL–20	03+73.69	29.22' LT
TEL–21	03+28.77	26.50' LT
TEL–22	03+00.02	26.50' LT
TEL–23	02+71.27	26.50' LT
TEL–24	02+26.36	29.22' LT
TEL–25	01+81.45	31.93' LT
TEL–26	01+62.99	36.85' LT

AIRFIELD GUIDANCE SIGNS DATA TABLE
(SEE NOTE 2)

SGN–#	STATION	OFFSET
SGN–1	01+68.23	74.13' RT
SGN–2	01+68.23	74.13' LT
SGN–3	03+08.01	35.50' RT

HANDHOLE DATA TABLE

HH–#	STATION	OFFSET	SIZE
HH–1	03+55.95	39.13' RT	2' X 3'
HH–2	03+55.95	39.13' LT	2' X 3'

JUNCTION CAN DATA TABLE

JC–#	STATION	OFFSET
JC–1	01+59.90	73.95' RT

EQUIPMENT LOCATION STANDARDS TABLE

EQUIPMENT TYPE	LOCATION STANDARD	NOTES
SIZE 1 AIRFIELD GUIDANCE SIGNS	10' – 20' (SEE NOTE 2)	MEASURE TO SIGN EDGE CLOSEST TO TAXIWAY EDGE/OUTER TAXIWAY EDGE MARKING (SEE FAA AC 1505340–18)
HANDHOLE		STATION/OFFSET GIVEN IS CENTER OF HANDHOLE LID
JUNCTION CAN		STATION/OFFSET GIVEN IS CENTER OF JUNCTION CAN LID
TAXIWAY EDGE LIGHT	2'–10' (SEE NOTE 3)	MEASURE TO CENTER OF LIGHT FIXTURE – STATION/OFFSET GIVEN IS CENTER OF LIGHT FIXTURE (SEE FAA AC 150/5340–30)

GENERAL NOTES

1. EQUIPMENT NUMBERS SHOWN ARE FOR CONSTRUCTION REFERENCE. COORDINATE WITH AIRPORT MAINTENANCE FOR LABELING OF ALL EQUIPMENT.
2. CONTRACTOR TO ENSURE AIRFIELD GUIDANCE SIGN LOCATIONS FALL WITHIN FAA SPECIFICATIONS. CONTRACTOR SHALL CONFIRM ANY DIFFERENCES OF MEASUREMENTS/DISCREPANCIES, WHEN SURVEY OF AIRFIELD GUIDANCE SIGN AND BASE IS BEING PERFORMED, WITH ENGINEER BEFORE SIGN BASE IS INSTALLED.
3. CONTRACTOR TO ENSURE NEW TAXIWAY EDGE LIGHT LOCATIONS DO NOT EXCEED 10 FEET FROM EDGE OF FULL STRENGTH PAVEMENT/OUTER EDGE OF TAXIWAY EDGE MARKING AND ARE IN–LINE WITH EXISTING TAXIWAY EDGE LIGHTING IF APPLICABLE – PERFORM FIELD ADJUSTMENTS AS NECESSARY. CONTRACTOR SHALL CONFIRM ANY DIFFERENCES OF MEASUREMENTS/DISCREPANCIES, WHEN SURVEY OF LIGHT LOCATIONS IS BEING PERFORMED, WITH ENGINEER BEFORE LIGHT BASE IS INSTALLED.
4. OFFSETS GIVEN FOR EACH EQUIPMENT TYPE ARE MEASURED FROM NEAREST TAXIWAY CENTERLINE (ALIGNMENT).

Stantec
Stantec Consulting Services Inc.
3133 West Frye Road, Suite 300
Chandler AZ 85226 U.S.A.
Tel: (480) 687-6100
www.stantec.com

The Contractor shall verify and be responsible for all dimensions. DO NOT scale the drawing - any errors or omissions shall be reported to Stantec without delay. The Copyrights to all designs and drawings are the property of Stantec. Reproduction or use for any purpose other than that authorized by Stantec is forbidden.

Consultant

CR engineers
16719 East Palisades Blvd., Suite 202
Fountain Hills, AZ 85268
Phone: (480) 816-5541
Fax: (480) 816-5540
www.crengs.com

Issued	By	Appd	YYYY.MM.DD

Revision	By	Appd	YYYY.MM.DD

Permit/Seal

Registered Professional Engineer (Electrical) CERTIFICATE NO. 36696 CATHERINE ALCORN Date Signed 2025.03.21 ARIZONA, U.S.A.

Client/Project

Taxiway E Realignment
WILLIAMS, AZ U.S.A.

Project No.: 181711365
File Name: 23009 E4.1 TE
Scale: NTS

JBW	RD	CA	2025.03.21
Dwn.	Dsgn.	Chkd.	YYYY.MM.DD

Title
AIRFIELD GUIDANCE SIGNAGE SCHEDULE

Revision: 0 Sheet: 23 of 30
Drawing No.
E4.1

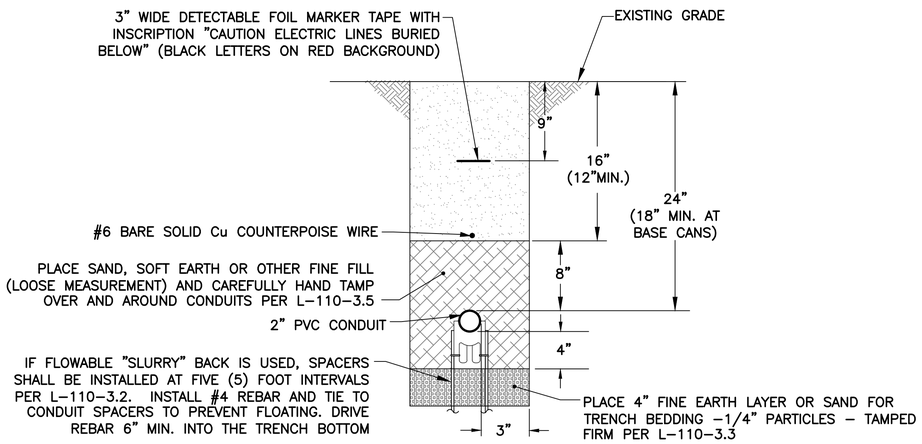

ALL DIMENSIONS ARE MINIMUM. DETAIL APPLICABLE FOR ALL CONDUIT BETWEEN L-867 BASE CANS.

500 TYP *DIRECT EARTH BURIED (DEB) CONDUIT DETAIL*

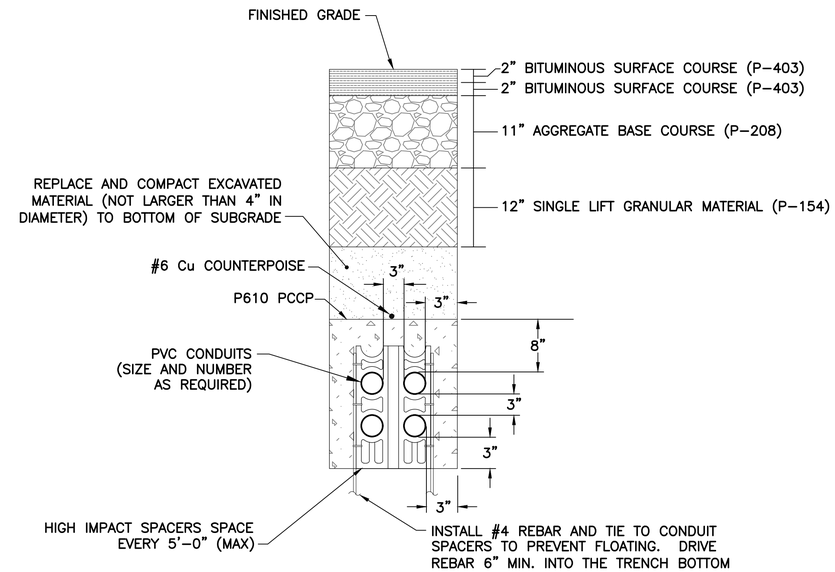

ALL DIMENSIONS ARE MINIMUM

501 TYP *CONCRETE ENCASED (CE) CONDUIT DUCTBANK*
NTS

NOTES

1. SEE CIVIL SHEETS FOR PAVEMENT STRUCTURAL SECTION

GENERAL NOTES FOR CONDUIT INSTALLATION

1. PROVIDE PULL STRING IN ALL (NEW) UNUSED CONDUITS. PLUG ENDS IN HANDHOLES.
2. P-610 CONCRETE ENCASE UNDER PAVEMENT AND DRAINAGE CHANNELS AS INDICATED ON PLANS.
3. INSTALL A #6 BARE COPPER (Cu) COUNTERPOISE ABOVE EACH DUCT ASSEMBLY FROM HANDHOLE-TO-HANDHOLE AND EXOTHERMICALLY WELD TO GROUND RODS AT EACH HANDHOLE.
4. INSTALL LIGHTING SERIES CIRCUITS AS FOLLOWS:
   A. ONE CIRCUIT (1 OR 2 CONDUCTORS) PER 2"C. LIMIT 4"C TO NO MORE THAN (8) CONDUCTORS.
   B. START INSTALLATION IN BOTTOM CONDUITS OF DUCT ARRAY, LEAVING THE UPPER CONDUITS EMPTY.
5. ALL UNDERGROUND CONDUITS SHALL MAINTAIN A 12" (MIN.) SEPARATION FROM ALL OTHER (EXISTING OR NEW) UNDERGROUND FACILITIES (I.E. WATER, SEWER, AND GAS LINES, INCLUDING BOTH PUBLIC AND PRIVATE), UNLESS NOTED OTHERWISE ON DRAWINGS.
6. CONDUIT IN DUCTBANK(S) ARE TO BE STACKED NO MORE THAN FOUR (4) CONDUITS. IF MORE CONDUITS ARE NEEDED, THE WIDTH OF THE TRENCH IS TO BE INCREASED.

Contact Arizona 811 at least two full working days before you begin excavation
ARIZONA811 BLUE STAKE, INC.
Call 811 or click Arizona811.com

Stantec
Stantec Consulting Services Inc.
3133 West Frye Road, Suite 300
Chandler AZ 85226 U.S.A.
Tel: (480) 687-6100
www.stantec.com

The Contractor shall verify and be responsible for all dimensions. DO NOT scale the drawing - any errors or omissions shall be reported to Stantec without delay. The Copyrights to all designs and drawings are the property of Stantec. Reproduction or use for any purpose other than that authorized by Stantec is forbidden.

Consultant

CR engineers
16719 East Palisades Blvd., Suite 202
Fountain Hills, AZ 85268
Phone: (480) 816-5541
Fax: (480) 816-5540
www.crengr.com

Issued	By	Appd	YYYY.MM.DD
Revision	By	Appd	YYYY.MM.DD

Permit/Seal

Registered Professional Engineer (Electrical)
CERTIFICATE NO. 36696
CATHERINE ALCORN
Date Signed 21 MAR 25
ARIZONA, U.S.A.

Client/Project
Taxiway E Realignment
WILLIAMS, AZ U.S.A.

Project No.: 181711365
File Name: 23009 ES.1 - DUCTBANKS TE
Scale: NTS

JBW	RD	CA	2025.03.21
Dwn.	Dsgn.	Chkd.	YYYY.MM.DD

Title
ELECTRICAL DETAILS - DUCTBANKS

Revision: 0 Sheet: 24 of 30
Drawing No.
E5.1

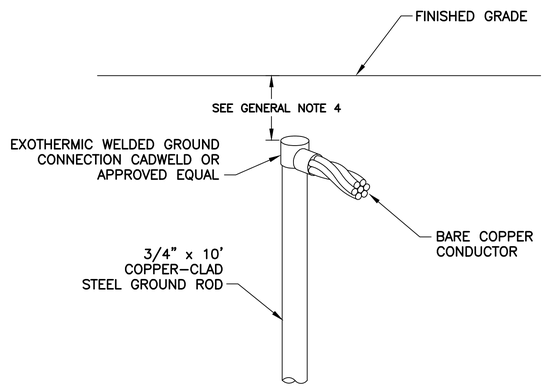

561 TYP — CABLE TO GROUND ROD CONNECTION

NTS

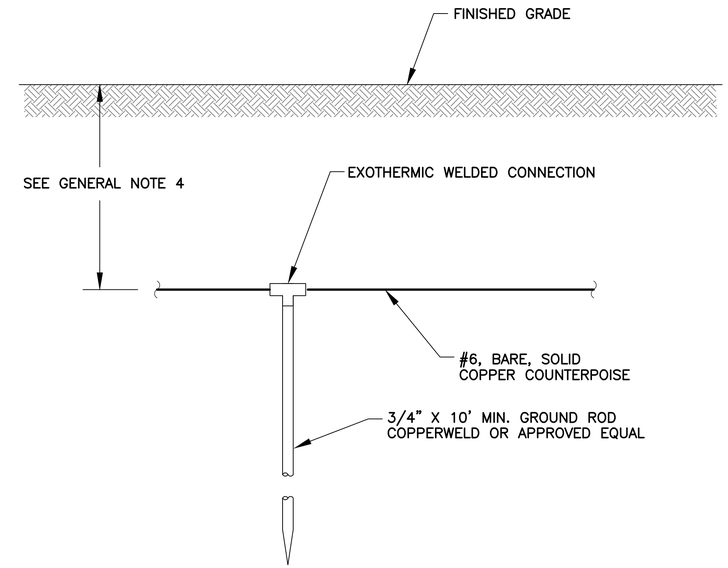

761 TYP — COUNTERPOISE INSTALLATION DETAIL

NTS

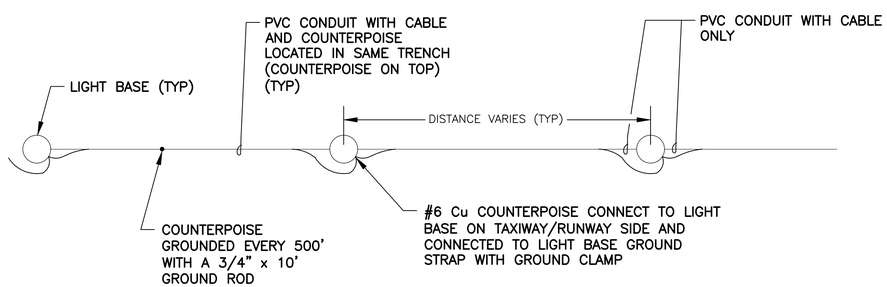

EQUIPOTENTIAL METHOD

762 TYP — COUNTERPOISE AND GROUND ROD CONNECTIONS DETAIL

NTS

GENERAL NOTES

1. COST OF GROUND RODS IS INCIDENTAL TO THE ASSOCIATED ITEMS REQUIRING GROUNDING UNLESS OTHERWISE SPECIFIED.
2. WHERE POSSIBLE, NEW COUNTERPOISE SYSTEM SHALL BE CONNECTED TO ANY EXISTING COUNTERPOISE SYSTEM ENCOUNTERED.
3. GROUNDING ELECTRODES INSTALLED AS PART OF THE COUNTERPOISE SYSTEM SHALL BE SPACED AT DISTANCES NO GREATER THAN 500 FT. (MAX).
4. REFER TO CONDUIT/DUCT BANK DETAILS FOR DEPTHS.

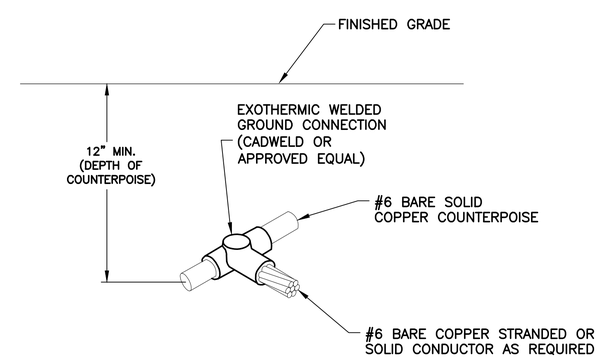

766 TYP — COUNTERPOISE TO CABLE CONNECTION DETAIL

NTS

Contact Arizona 811 at least two full working days before you begin excavation

ARIZONA811 BLUE STAKE, INC.

Call 811 or click Arizona811.com

Stantec

Stantec Consulting Services Inc.
3133 West Frye Rd, Ste 300
Chandler AZ 85226 U.S.A.
Tel: (480) 687-6100
www.stantec.com

The Contractor shall verify and be responsible for all dimensions. DO NOT scale the drawing - any errors or omissions shall be reported to Stantec without delay. The Copyrights to all designs and drawings are the property of Stantec. Reproduction or use for any purpose other than that authorized by Stantec is forbidden.

Consultant

CR engineers
16719 East Palisades Blvd., Suite 202
Fountain Hills, AZ 85268
Phone: (480) 816-5541
Fax: (480) 816-5540
www.crengr.com

Issued	By	Appd	YYYY.MM.DD

Revision	By	Appd	YYYY.MM.DD

Permit/Seal

Registered Professional Engineer (Electrical)
CERTIFICATE NO. 36696
CATHERINE ALCORN
Date Signed 21 MAR 25
ARIZONA, U.S.A.

Client/Project

Taxiway E Realignment
WILLIAMS, AZ U.S.A.

Project No.: 181711365

File Name: 23009 E5.2-GROUNDING TE

Scale: NTS

JBW	RD	CA	2025.03.21
Dwn.	Dsgn.	Chkd.	YYYY.MM.DD

Title

ELECTRICAL DETAILS - GROUNDING

Revision: 0 Sheet: 25 of 30

Drawing No.

E5.2

q:\projects\23000\23009 hos cclark (crm) taxiway e realignment and airfield signage\cad\cad sheets\taxiway e realignment\23009 e5.2-grounding te
2025.03.20 2:53:56 PM
PWSIGN-A1 SHEET - ANSI D

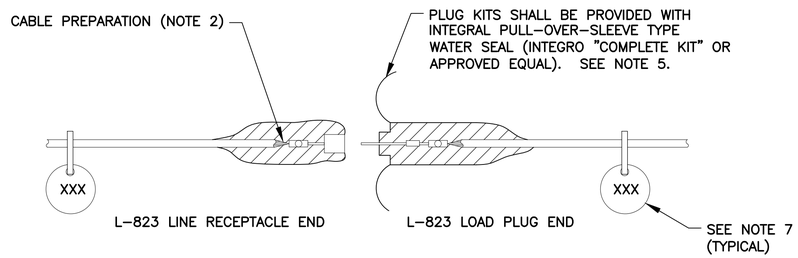

FOR SPLICES INSIDE CANS AND HANDHOLES

NOTES

1. PROVIDE MALE AND FEMALE L–823 CONNECTORS AS REQUIRED ON EACH CONDUCTOR IN EACH BASE, HANDHOLE, OR MANHOLE TO ALLOW ISOLATION OF HOMERUN CIRCUIT, NO STRAIGHT–THROUGH ALLOWED.
2. ALL CABLE ENDS SHALL BE PREPARED WITH THE USE OF A TAPERING TOOL SPECIFICALLY DESIGNED FOR USE WITH L–824 CABLES.
3. PLUG AND RECEPTACLE END FITTINGS SHALL BE CRIMPED ONTO THE CONDUCTOR BY USE OF AN AIRPORT PERSONNEL ACCEPTED RATCHETING TYPE CRIMPING TOOL.
4. AT THE POINT OF CONNECTION WITH THE EXISTING FIELD CIRCUITS, INSTALL NEW L–823 PLUGS ON BOTH THE NEW AND EXISTING CABLES. VERIFY INSULATION TYPES OF BOTH NEW AND EXISTING CABLES AND COORDINATE WITH TERMINATION KITS TO ASSURE PROPER AND WATERPROOF FIT.
5. INSTALL SCOTCH 33+ VINYL ELECTRICAL TAPE ON CONNECTION AFTER PULLING SLEEVE OVER COMPLETE KIT.
6. THERE SHALL BE NO SPLICES BETWEEN LIGHTS, ONLY IN BASES OR HANDHOLES.
7. PROVIDE AND INSTALL NON–CONDUCTIVE CIRCUIT IDENTIFICATION TAGS ATTACHED TO EACH SIDE OF ALL CONNECTOR KITS.
8. ON THE CABLES FOR THE RUNWAY CIRCUIT, TAPE FROM THE BACK END OF THE CONNECTOR KIT ONTO CABLE FOR 3" EACH, RED OR WHITE CIRCUIT TAPE FOR FASTER IDENTIFICATION AND MATCH EXISTING MANHOLE LAYOUTS.
9. ON THE CABLES FOR THE TAXIWAY AND SIGNAGE CIRCUITS, TAPE FROM THE BACK END OF THE CONNECTOR KIT ONTO CABLE FOR 3" EACH, BLUE THEN WHITE CIRCUIT TAPE FOR SIGNS, BLUE ONLY CIRCUIT TAPE FOR TAXIWAY EDGE LIGHTS, FOR FASTER IDENTIFICATION AND MATCH EXISTING MANHOLE LAYOUTS.

925 TYP — *TYPICAL 5KV CABLE SPLICE*
NTS

Contact Arizona 811 at least two full working days before you begin excavation
ARIZONA811 BLUE STAKE, INC.
Call 811 or click Arizona811.com

Stantec
Stantec Consulting Services Inc.
3133 West Frye Road, Suite 200,
Chandler AZ 85226 U.S.A.
Tel: (480) 687-6100
www.stantec.com

The Contractor shall verify and be responsible for all dimensions. DO NOT scale the drawing - any errors or omissions shall be reported to Stantec. Copyright reserved. The Copyright to all designs and drawings are the property of Stantec. Reproduction or use for any purpose other than that authorized by Stantec is forbidden.

Consultant

CR engineers
16719 East Palisades Blvd., Suite 202
Fountain Hills, AZ 85268
Phone: (480) 816-5541
Fax: (480) 816-5540
www.crengr.com

Issued	By	Appd	YYYY.MM.DD

Revision	By	Appd	YYYY.MM.DD

Permit/Seal

Registered Professional Engineer (Electrical)
CERTIFICATE NO.
36696
CATHERINE ALCORN
Date Signed 21 MAR 25
ARIZONA, U.S.A.

Client/Project

Taxiway E Realignment
WILLIAMS, AZ U.S.A.

Project No.: 181711365

File Name: 23009 ES.3-CABLE SPLICE.TE

Scale: NTS

JBW	RD	CA	2025.03.21
Dwn.	Dsgn.	Chkd.	YYYY.MM.DD

Title

ELECTRICAL DETAILS - 5KV CABLE SPLICE

Revision: 0 Sheet: 26 of 30

Drawing No.

E5.3

c:\projec~1\23009\23009 ho cork (crm) taxiway e realignment and airfield signage\cad\cad sheets\taxiway e realignment\23009 es.3-cable splice te
2025.03.20 2:54:06 PM
ORIGINAL SHEET - ANSI D

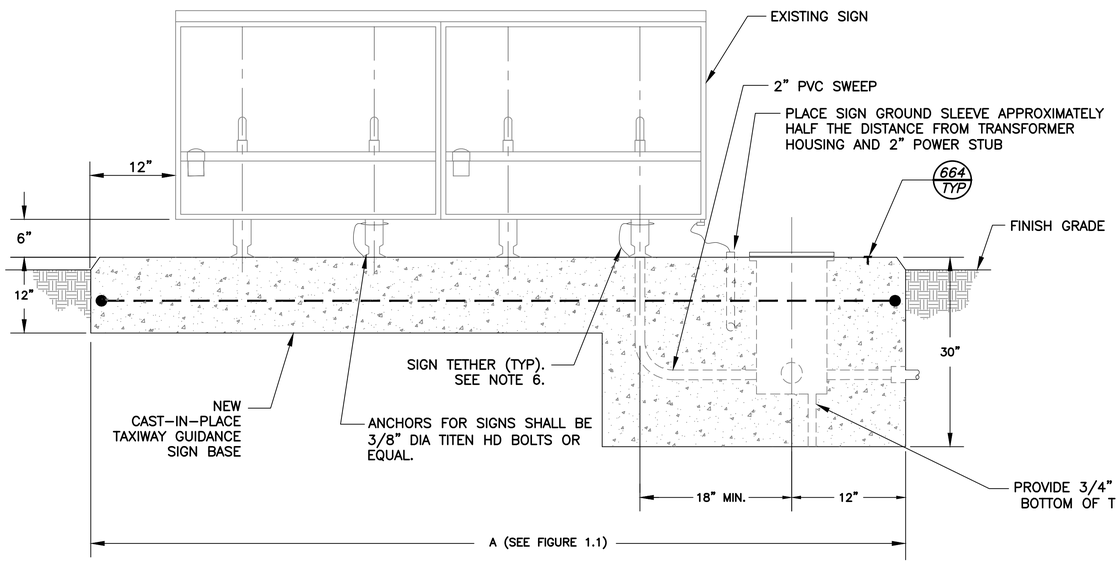

SIDE VIEW

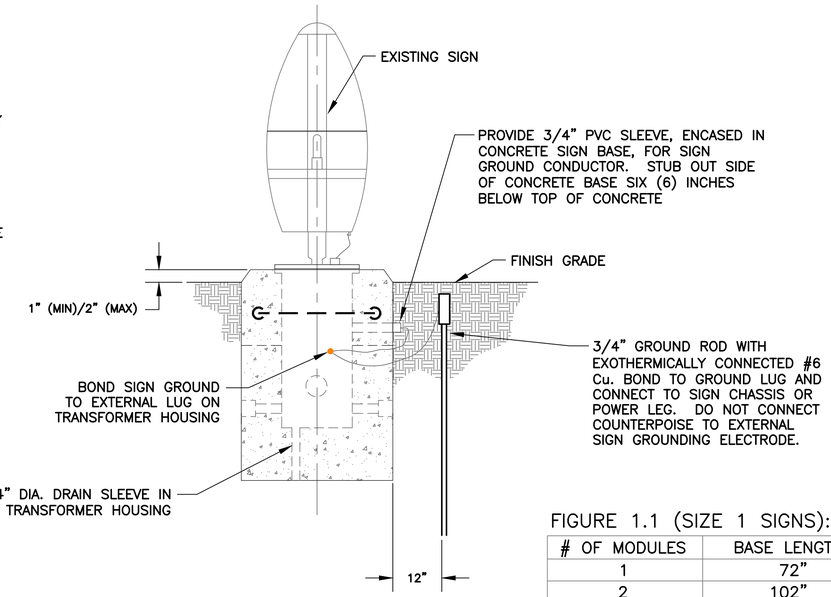

FRONT VIEW (CAN SIDE)

FIGURE 1.1 (SIZE 1 SIGNS):

# OF MODULES	BASE LENGTH (A)
1	72"
2	102"
3	132"
4	162"

*ALL LENGTHS SHOWN ARE MINIMUM

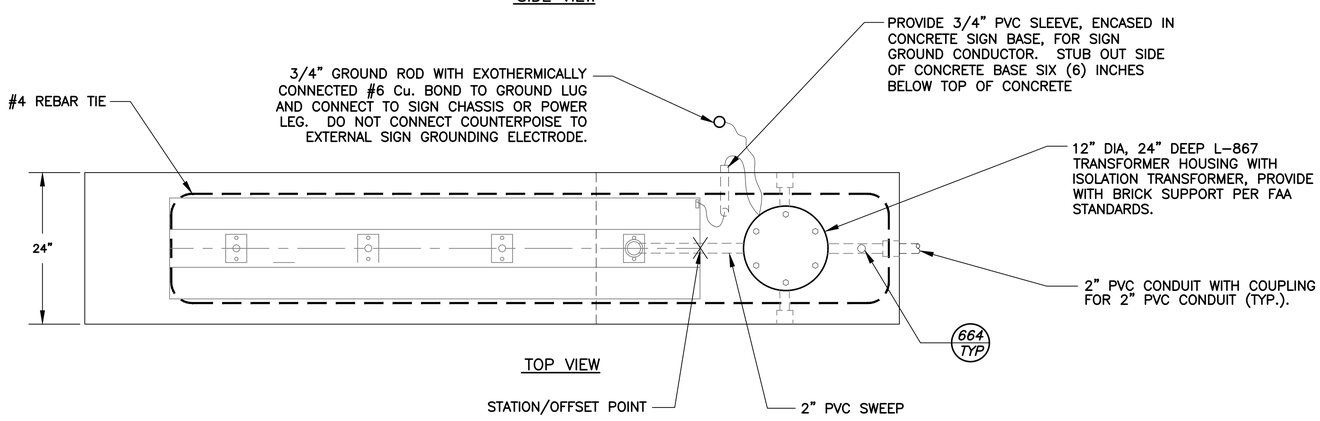

TOP VIEW

SIGN HEIGHTS AND LOCATION DISTANCES FOR AIRFIELD GUIDANCE SIGNS (PROVIDED FOR REFERENCE ONLY)

SIGN SIZE	LEGEND HEIGHT	LEGEND PANEL HEIGHT	INSTALLED* (MAX.)	PERPENDICULAR DISTANCE FROM DEFINED PAVMENT EDGE TO NEAR SIDE OF SIGN
1	12"	18"	30"	10' – 20'
2	15"	24"	36"	20' – 35'
3	18"	30"	42"	35' – 60'

* THE HEIGHT REFERRED TO IN THIS COLUMN IS THE DISTANCE FROM TOP OF THE SIGN TO GRADE MEASURED AT THE SIDE OF THE SIGN THAT IS NEAREST TO THE APPLICABLE RUNWAY, TAXIWAY, OR APRON. IN ACCORDANCE WITH PARAGRAPH 1.14, THIS HEIGHT SHOULD BE REDUCED, IF NECESSARY, TO PROVIDE THE REQUIRED 12-INCH CLEARANCE BETWEEN THE TOP OF THE SIGN AND THE CRITICAL AIRCRAFT (AS NOTED IN PARAGRAPH 1.14.3).

(SEE FAA ADVISORY CIRCULAR 150/5340-18 FOR FURTHER INFORMATION AND CLARIFICATION)

919 TYP NEW CAST-IN-PLACE GUIDANCE SIGN BASE DETAIL

NTS

NOTES

1. NEW CAST-IN-PLACE CONCRETE BASE FOR AIRFIELD GUIDANCE SIGN SHOWN WITH A TWO MODULE SIGN FOR ILLUSTRATIVE PURPOSES ONLY. SEE FIGURE 1.1 FOR ACTUAL LENGTH OF BASE NEEDED FOR MULTIPLE MODULE SIGNS.
2. TOP OF BASE SHALL BE LEVEL WITH OR NO HIGHER THAN 1" ABOVE SURROUNDING FINISHED GRADE
3. TRANSFORMER HOUSING SHALL BE ORIENTED AT RUNWAY/TAXIWAY EDGE.
4. SIGN TETHER HARD ANCHOR POINTS MUST BE PROVIDED ON ONE SIGN MOUNTING LEG ABOVE THE FRANGIBLE BREAKING POINT. TETHER ANCHOR HARD POINTS MUST BE PROVIDED SO THAT ONE END OF THE TETHER ATTACHES TO THE SIGN STRUCTURE, AND THE OTHER END ATTACHES BELOW THE FRANGIBLE POINT ON THE COUPLING TO EITHER ONE OF THE LEG MOUNTING BOLTS OR AN INDEPENDENT BOLT IN THE SIGN CONCRETE MOUNTING PAD.

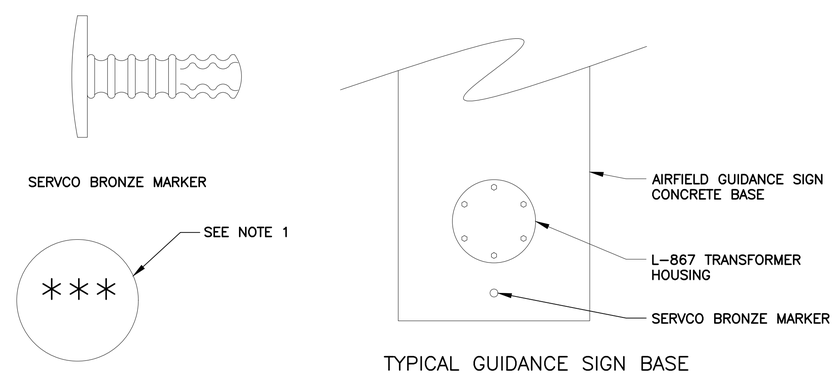

TYPICAL GUIDANCE SIGN BASE MARKER LOCATION

664 TYP SIGN BASE CIRCUIT IDENTIFICATION MARKER

NTS

NOTE:

1. STAMP CIRCUIT IDENTIFICATION INTO BASE MARKER WITH 1/2" CHARACTERS.
2. PROVIDE CIRCUIT ID MARKERS AT NEW SIGN BASES AND JUNCTION CANS.

Contact Arizona 811 at least two full working days before you begin excavation
ARIZONA811 BLUE STAKE, INC.
Call 811 or click Arizona811.com

Stantec
Stantec Consulting Services Inc.
3133 West Frye Rd, Suite 300.
Chandler AZ 85226 U.S.A.
Tel: (480) 687-6100
www.stantec.com

The Contractor shall verify and be responsible for all dimensions. DO NOT scale the drawing - any errors or omissions shall be reported to Stantec without delay. The Copyrights to all designs and drawings are the property of Stantec. Reproduction or use for any purpose other than that authorized by Stantec is forbidden.

Consultant
CR engineers
16719 East Palisades Blvd., Suite 202
Fountain Hills, AZ 85268
Phone: (480) 816-5541
Fax: (480) 816-5540
www.crengr.com

Revision	By	Appd	YYYY.MM.DD

Issued	By	Appd	YYYY.MM.DD

Permit/Seal

Registered Professional Engineer (Electrical) CERTIFICATE NO. 36696 CATHERINE ALCORN Date Signed 21 MAR 25 ARIZONA, U.S.A.

Client/Project
Taxiway E Realignment
WILLIAMS, AZ U.S.A.

Project No.: 181711365
File Name: 23009 E5.4 - SIGN BASE TE
Scale: NTS

JBW	RD	CA	2025.03.21
Dwn.	Dsgn.	Chkd.	YYYY.MM.DD

Title
ELECTRICAL DETAILS - CONCRETE SIGN BASE

Revision: 0 Sheet: 27 of 30
Drawing No.
E5.4

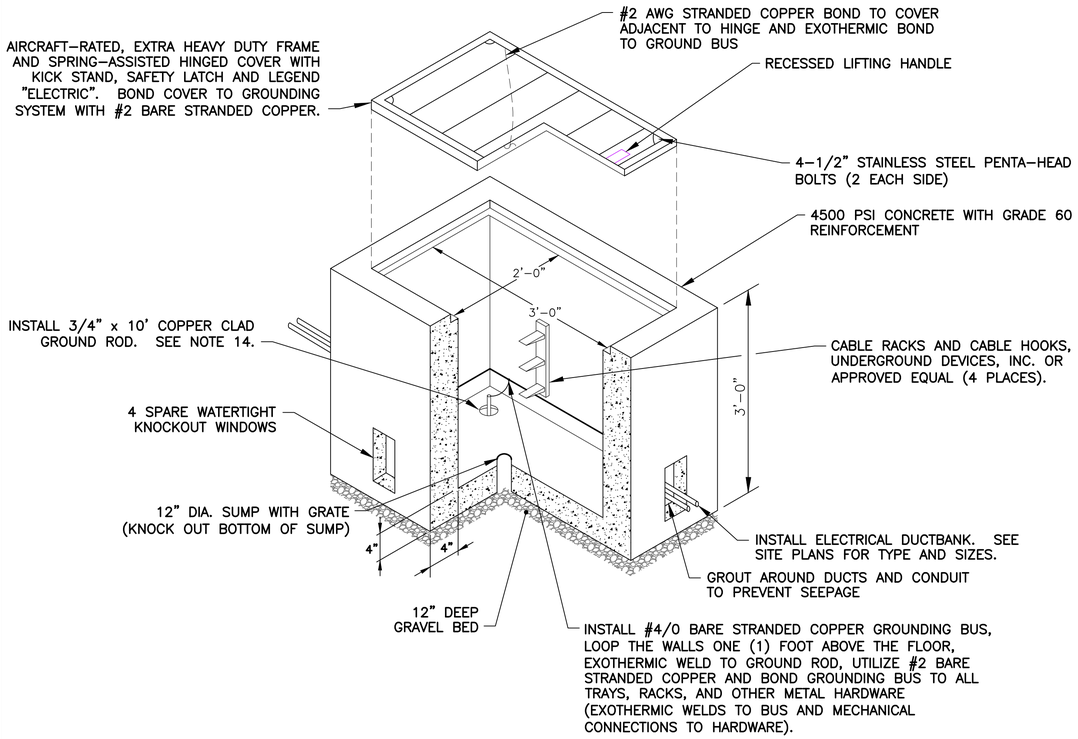

572 TYP — *2' x 3' CONCRETE HANDHOLE DETAIL*
NTS

GENERAL HANDHOLE INSTALLATION NOTES

1. PRE–CAST AIRCRAFT–RATED CONCRETE HANDHOLE AND DUCTILE IRON COVER SHALL BE DESIGNED FOR A 60 KIPS CONCENTRATED WHEEL LOAD OVER A 12" X 24" AREA, OLD CASTLE PRE–CAST CONCRETE PRODUCTS OR APPROVED EQUAL.
2. ALL CABLE THOUGH HANDHOLE SHALL HAVE SUFFICIENT SLACK SO CABLE AND CONNECTOR CAN BE BROUGHT TO SURFACE FOR SPLICING, PROVIDE MINIMUM 15 FEET OF SLACK FOR EACH CABLE ENTERING HANDHOLE.
3. AT GROUND ROD OPENING, DRIVE GROUND ROD INTO EARTH LEAVING SIX (6) INCHES EXTENDING ABOVE FLOOR. SEAL HOLE WATERTIGHT WITH PORTLAND CEMENT GROUT AROUND ROD. DO NOT INSTALL THROUGH DRAIN SUMP.
4. SUBMIT LAYOUT OF EACH HANDHOLE FOR APPROVAL BY ENGINEER, INDICATING ELECTRICAL DUCT, CONDUIT AND SPARE STUBOUTS.
5. PROVIDE HANDHOLES WITH WATERTIGHT SPARE DUCT SLOTS IN EACH EMPTY FACE.
6. EXCAVATION AND BACKFILL NECESSARY FOR THE CONSTRUCTION OF THE HANDHOLE SHALL BE PERFORMED IN ACCORDANCE WITH THE SPECIFICATION REQUIREMENTS.
7. PROVIDE END BELLS FINISHED FLUSH WITH INTERIOR WALLS AND NON–SHRINK GROUT AROUND EACH CONDUIT ENTERING THE HANDHOLE VIA A CONDUIT STUBOUT.
8. COVER SHALL BE 1" MAXIMUM ABOVE FINISHED GRADE. AREA SURROUNDING HANDHOLE SHALL BE GRADED 10' IN ALL DIRECTIONS, SUCH TO PREVENT WATER AND DIRT ACCUMULATION ACROSS THE TOP OF THE COVER AND ALLOW WATER TO DRAIN AWAY FROM THE HANDHOLE – INCIDENTAL (NPI).
9. BOND AND GROUND COVER AND FRAME TO GROUND BUS USING #2 AWG STRANDED COPPER WIRE.
10. INSTALL PULLING IRONS IN EACH FACE.
11. PROVIDE MANUFACTURER DRAWINGS AND STRUCTURAL CALCULATIONS FOR ALL CONCRETE ELEMENTS OF HANDHOLES AND FABRICATED AIRCRAFT–RATED COVERS.
12. CONNECT COUNTERPOISE TO GROUND ROD OUTSIDE HANDHOLE. ROUTE AROUND HANDHOLES.
13. A GROUND BUS OF 4/0 BARE COPPER SHALL BE EXOTHERMICALLY BONDED TO THE GROUND ROD AND LOOP THE CONCRETE STRUCTURE WALLS. THE GROUND BUS SHALL BE A MINIMUM OF ONE (1) FOOT (30 CM) ABOVE THE FLOOR OF THE STRUCTURE AND SEPARATE FROM OTHER CABLES. NO. 2 AMERICAN WIRE GAUGE (AWG) BARE COPPER PIG TAILS SHALL BOND THE GROUNDING BUS TO ALL CABLE TRAYS AND OTHER METAL HARDWARE WITHIN THE CONCRETE STRUCTURE. CONNECTIONS TO THE GROUNDING BUS SHALL BE EXOTHERMIC. IF AN EXOTHERMIC WELD IS NOT POSSIBLE, CONNECTION TO THE GROUNDING BUS SHALL BE MADE BY USING CONNECTOR APPROVED FOR DIRECT BURIAL IN SOIL OR CONCRETE PER UL 467. HARD CONNECTIONS MAY BE MECHANICAL USING A LUG DESIGNED FOR THAT PURPOSE.
14. A GROUND ROD SHALL BE INSTALLED IN THE FLOOR OF ALL CONCRETE STRUCTURE SO THAT THE TOP OF ROD EXTENDS SIX (6) INCHES (150MM) ABOVE THE FLOOR. THE GROUND ROAD SHALL BE INSTALLED WITHIN ONE (1) FOOT (30 CM) OF A CORNER OF THE CONCRETE STRUCTURE. GROUND RODS SHALL BE INSTALLED PRIOR TO CASTING THE BOTTOM SLAB. WHERE THE SOIL CONDITION DOES NOT PERMIT DRIVING THE GROUND ROD INTO THE EARTH WITHOUT DAMAGE TO THE GROUND ROD, THE CONTRACTOR SHALL DRILL A FOUR (4) INCH (100 MM) DIAMETER HOLE INTO THE EARTH TO RECEIVE THE GROUND ROD. THE HOLE AROUND THE GROUND ROD SHALL BE FILLED THROUGHOUT ITS LENGTH, BELOW SLAB, WITH PORTLAND CEMENT GROUT. GROUND RODS SHALL BE INSTALLED IN PRECAST BOTTOM SLAB OF STRUCTURES BY DRILLING A HOLE THROUGH BOTTOM SLAB AND INSTALLING THE GROUND ROD. BOTTOM SLAB PENETRATION SHALL BE SEALED WATERTIGHT WITH PORTLAND CEMENT GROUT AROUND THE GROUND ROD.

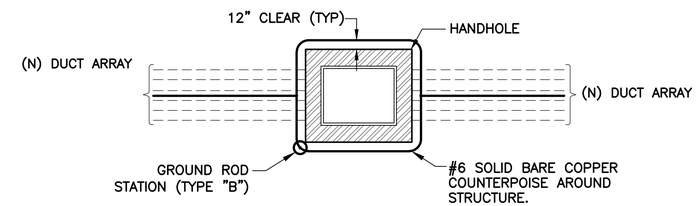

C — *HANDHOLE COUNTERPOISE DETAIL*
NTS

NOTES:

ALL COUNTERPOISE WIRES FOR DUCTBANKS AND CONDUITS TO BE EXOTHERMICALLY WELDED TO COUNTERPOISE LOOP AROUND STRUCTURE

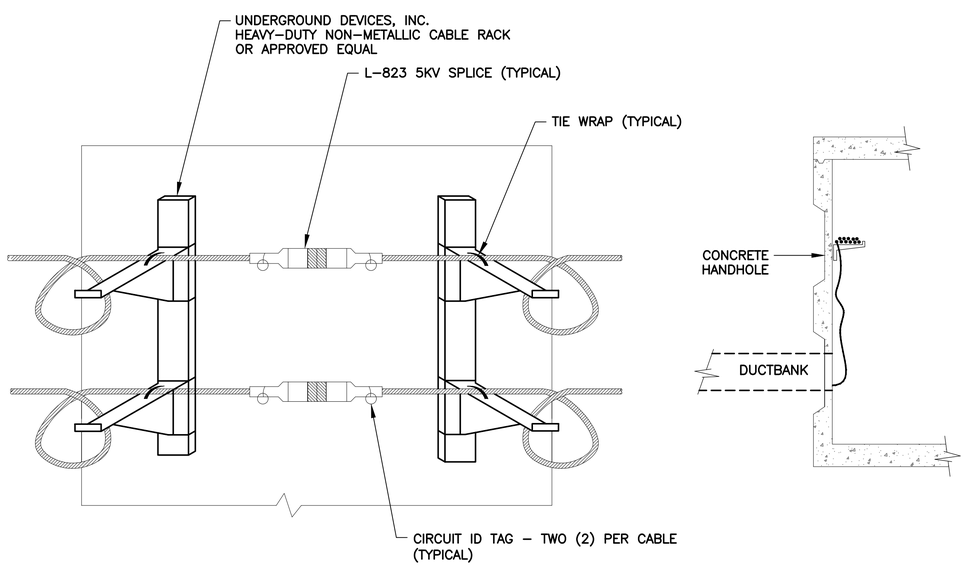

A — *CABLE RACKING DETAIL*
NTS

CABLE RACKING NOTES

1. PROVIDE NON–METALLIC, NON–CONDUCTIVE, RACK ARMS, BOLTED TO CHANNELS INSET IN HANDHOLE WALLS. PROVIDE MIN. TWO (2) ARMS FOR EVERY WALL.
2. CABLE RACKING SHALL BE LIMITED TO THE UPPER HALF OF THE HANDHOLE.
3. PROVIDE TWO (2) CIRCUIT TAGS FOR EVERY L–823 CABLE SPLICE IN HANDHOLE WITHIN 24" OF SPLICE.
4. PROVIDE A MIN. OF TWELVE (12) FEET OF CABLE BETWEEN ENTRY POINT AND L–823 SPLICE.
5. RACK AIRFIELD AND FIBER OPTICS CABLES, WHERE POSSIBLE, ON SIDE(S) OPPOSITE OF ENTRY/EXIT CONDUITS.
   a. DUCT/CONDUIT ARRAY SHALL ENTER HANDHOLE IN LOWER HALF OF THE HANDHOLE.
   b. PROVIDE BELL END FOR EVERY CONDUIT IN THE ARRAY.
   c. GROUT AROUND/BETWEEN CONDUITS AND CONCRETE WALL.

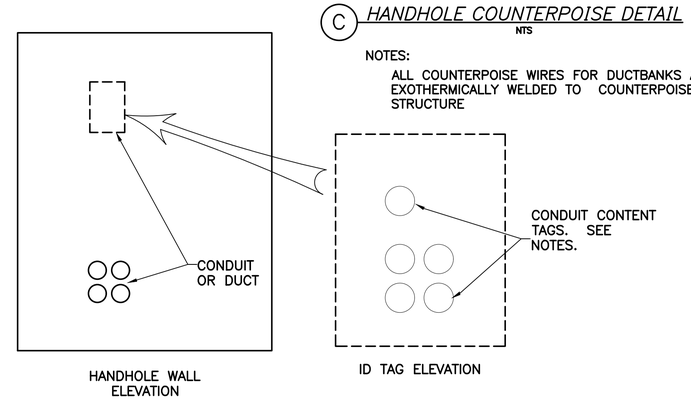

B — *CABLE ROUTING IDENTIFICATION TAG DETAIL*
NTS

PLAQUE NOTES:

1. AFFIX ENGRAVED PHENOLIC TAGS TO THE WALL WITH SILICONE SEALANT ABOVE THE DUCT OR CONDUIT ENTRY IN A WAY THAT MIMICS THE ARRAY. WIRE BRUSH CONCRETE WALL TO ASSURE ADHESION.
2. THE TAGS SHALL BE APPROX 1 1/2" DIA. AND SHALL HAVE MINIMUM 1/4" LETTERING.

Contact Arizona 811 at least two full working days before you begin excavation
ARIZONA811 BLUE STAKE, INC.
Call 811 or click Arizona811.com

Stantec
Stantec Consulting Services Inc.
3133 West Frye Road, Suite 300
Chandler AZ 85226 U.S.A.
Tel: (480) 687-6100
www.stantec.com
The Contractor shall verify and be responsible for all dimensions. DO NOT scale the drawing - any errors or omissions shall be reported to Stantec without delay. The Copyrights to all designs and drawings are the property of Stantec. Reproduction or use for any purpose other than that authorized by Stantec is forbidden.

Consultant
CR engineers
16719 East Palisades Blvd., Suite 202
Fountain Hills, AZ 85268
Phone: (480) 816-5541
Fax: (480) 816-5540
www.crengr.com

Issued	By	Appd	YYYY.MM.DD
Revision	By	Appd	YYYY.MM.DD

Permit/Seal
Registered Professional Engineer (Electrical) CERTIFICATE NO. 36696 CATHERINE ALCORN Date Signed 27, MAR 25 ARIZONA, U.S.A.

Client/Project
Taxiway E Realignment
WILLIAMS, AZ U.S.A.

Project No.: 181711365
File Name: 23009 E5.5 - 2X3 HANDHOLE TE
Scale: NTS

JBW	RD	CA	2025.03.21
Dwn.	Dsgn.	Chkd.	YYYY-MM.DD

Title
ELECTRICAL DETAILS - 2'x3' HANDHOLE

Revision: 0 Sheet: 28 of 30
Drawing No.
E5.5

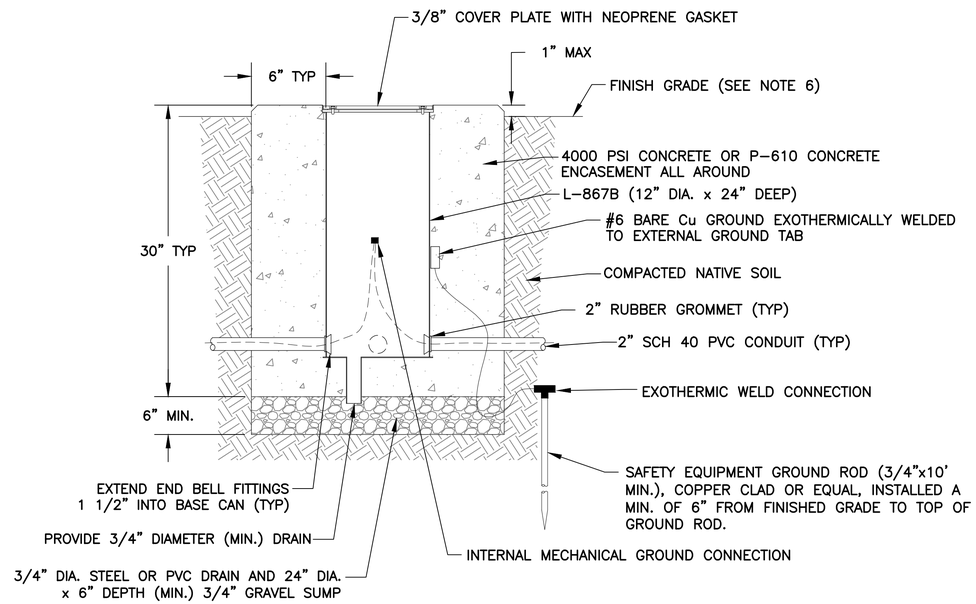

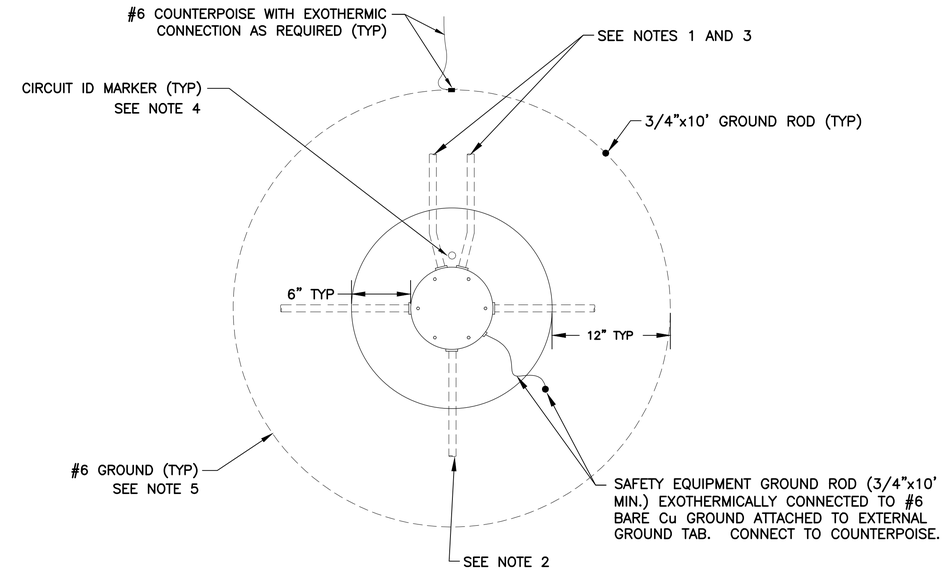

821 TYP — *L-867B JUNCTION CAN DETAIL*
NTS

NOTES:

1. NUMBER OF JUNCTION CANS AND CONDUIT CONFIGURATIONS VARY. SEE LAYOUT PLAN SHEETS FOR ORIENTATION. PROVIDE 2" SPARE CONDUIT FOR EACH CIRCUIT AT TAXIWAY CROSSINGS.
2. CONDUITS WHICH ARE NOT USED IN THE PROJECT SHALL BE CAPPED 4" OUTSIDE OF CONCRETE.
3. ORIENT JUNCTION CAN AS SHOWN ON ELECTRICAL SITE PLANS.
4. CONTRACTOR SHALL PROVIDE A 2" DIAMETER DOMED BRONZE MARKER AT EACH JUNCTION AS SHOWN. MARKER SHALL BE STAMPED WITH CIRCUIT IDENTIFICATION AS SHOWN ON DETAIL 664.
5. INSTALL GROUND ROD AND GROUND LOOP AT ALL JUNCTION CAN AS SHOWN. ONE GROUND ROD SHALL BE PROVIDED. COUNTERPOISE SHALL BE LOCATED NOMINALLY 6" ABOVE CONDUITS. BOND TO JUNCTION CANS.
6. CONTRACTOR SHALL GRADE AROUND JUNCTION CAN AS NECESSARY TO PREVENT SILT/DIRT INFILTRATION ONTO JUNCTION CAN. NO SEPARATE PAYMENT SHALL BE MADE.
7. EACH JUNCTION CAN HAS 4-2" GROMMETED HUBS. HUBS SHALL BE PLACED IN TWO LAYERS AND THE HUBS IN ONE LAYER SHALL BE 90° FROM THE HUBS IN THE OTHER LAYER. EACH PAIR OF HUBS SHALL BE 180° APART. MODIFICATION MAY BE REQUIRED TO ADD SPARE CONDUIT ENTRY HUB. SEAL UNUSED OPENINGS AS REQUIRED.
8. JUNCTION CANS SHALL BE INSTALLED SUCH THAT THE TOP FLANGE IS FLUSH (+0, -1/8") WITH THE TOP OF CONCRETE

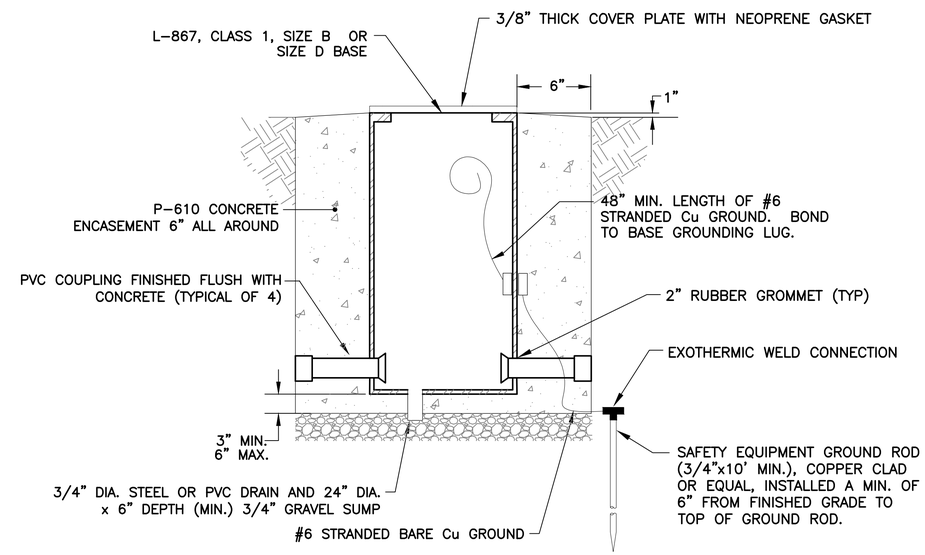

902 TYP — *PRE-CAST L-867 FIXTURE BASE/JUNCTION CAN*
NTS

NOTES:

1. CONTRACTOR MAY FURNISH PRE-CAST CONCRETE JUNCTION CANS AND FIXTURE BASES FOR INSTALLATION IN UNPAVED SHOULDERS AND INFIELDS OR RETROFIT IN EXISTING PAVED SHOULDERS. REFER TO CIVIL PLANS FOR FINISHED GRADE AND MATERIALS.
2. ONE-PIECE SONOTUBES OF CORRECT DIAMETER FOR 6" MIN. CONCRETE SURROUND MY BE UTILIZED FOR ONE-TIME USE ONLY. ROUND COLUMN FORMS SPECIFICALLY DESIGNED FOR MULTIPLE USE MAY BE USED.
3. CONTRACTOR SHALL SUBMIT ON SPECIFIC PRE-CAST MEANS AND METHODS FOR ENGINEER REVIEW AND APPROVAL.
4. REFER TO ELEVATED TAXIWAY AND/OR RUNWAY GUARD LIGHT FIXTURE AND COUNTERPOISE INSTALLATION DETAILS.

GENERAL NOTES:

1. LEAVE APPROXIMATELY SIX (6) FEET OF EACH CABLE COILED IN JUNCTION CAN SO THAT EACH CABLE MAY BE RAISED A MINIMUM OF TWO (2) FEET ABOVE TOP OF CAN.
2. CONTRACTOR SHALL PROVIDE CABLE CIRCUIT IDENTIFICATION (ID) MARKERS ATTACHED TO EACH CABLE ENTERING AND LEAVING JUNCTION CANS. IF NO L-823 CONNECTOR IS PRESENT, INSTALL ONE (1) ID MARKER.
3. TRANSITION FROM MULTI-WAY CONDUIT TRENCH TO JUNCTION CAN REQUIRES DISTRIBUTION OF 2" SCH 40 PVC TO EACH JUNCTION CAN. CONTRACTOR SHALL LIMIT CONDUIT BENDS TO 45 DEG. MAXIMUM.
4. CONTRACTOR SHALL INSTALL L-823 CONNECTORS IN A CONSISTENT MANNER FROM JUNCTION CAN TO THE NEXT. EACH SEGMENT OF #8 L-824C, 5KV CABLE IN THE AIRFIELD SHALL HAVE A MALE L-823 CONNECTOR ON ONE END AND A FEMALE CONNECTOR ON THE OTHER.

Contact Arizona 811 at least two full working days before you begin excavation
ARIZONA811 BLUE STAKE, INC.
Call 811 or click Arizona811.com

Stantec
Stantec Consulting Services Inc.
3133 West Frye Road, Suite 200,
Chandler AZ 85226 U.S.A.
Tel: (480) 687-6100
www.stantec.com

The Contractor shall verify and be responsible for all dimensions. DO NOT scale the drawing - any errors or omissions shall be reported to Stantec without delay. The Copyrights to all designs and drawings are the property of Stantec. Reproduction or use for any purpose other than that authorized by Stantec is forbidden.

Consultant
CR engineers
16719 East Palisades Blvd., Suite 202
Fountain Hills, AZ 85268
Phone: (480) 816-5541
Fax: (480) 816-5540
www.crengs.com

Issued	By	Appd	YYYY.MM.DD	Revision	By	Appd	YYYY.MM.DD

Permit/Seal

Registered Professional Engineer (Electrical) CERTIFICATE NO. 36696 CATHERINE ALCORN Date Signed 21 MAR 25 ARIZONA, U.S.A.

Client/Project
Taxiway E Realignment
WILLIAMS, AZ U.S.A.

Project No.: 181711365
File Name: 23009 E5.6 - JUNCTION CAN TE
Scale: NTS

JBW	RD	CA	2025.03.21
Dwn.	Dsgn.	Chkd.	YYYY.MM.DD

Title
ELECTRICAL DETAILS - JUNCTION CAN

Revision: 0 Sheet: 29 of 30
Drawing No.
E5.6

G:\Projects\23000\23009 Fsc clark (crm) taxiway e realignment and airfield signage\cad\cad sheets\taxiway e realignment\23009 e5.6 - junction can te
2025.03.20 2:54:36 PM
ORIGINAL SHEET - ANSI D

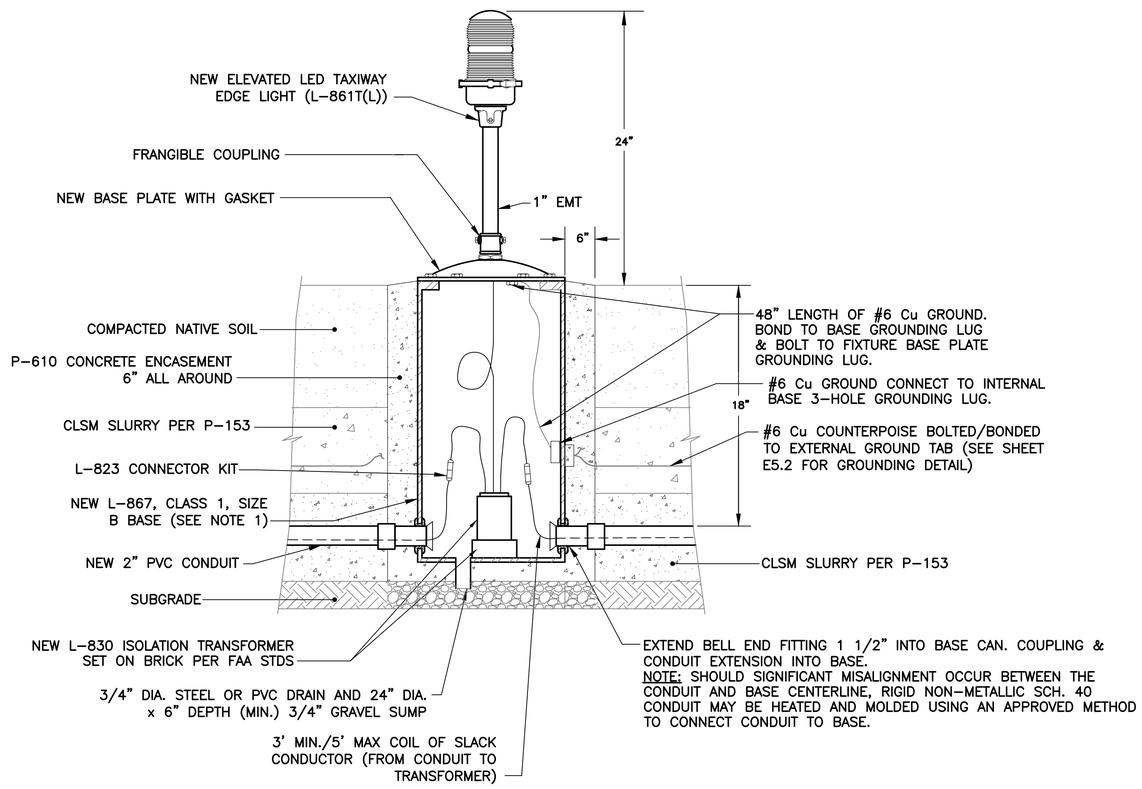

901 TYP *ELEVATED EDGE LIGHT DETAIL*
NTS

Contact Arizona 811 at least two full working days before you begin excavation
ARIZONA811 BLUE STAKE, INC.
Call 811 or click Arizona811.com

Stantec
Stantec Consulting Services Inc.
3133 West Frye Rd, Suite 300,
Chandler AZ 85226 U.S.A.
Tel: (480) 687-6100
www.stantec.com

The Contractor shall verify and be responsible for all dimensions. DO NOT scale the drawing - any errors or omissions shall be reported to Stantec without delay. The Copyrights to all designs and drawings are the property of Stantec. Reproduction or use for any purpose other than that authorized by Stantec is forbidden.

Consultant
CR engineers
16719 East Palisades Blvd., Suite 202
Fountain Hills, AZ 85268
Phone: (480) 816-5541
Fax: (480) 816-5540
www.crengr.com

Issued	Revision	By	Appd	YYYY.MM.DD

Issued	By	Appd	YYYY.MM.DD

Permit/Seal

Registered Professional Engineer (Electrical)
CERTIFICATE NO. 36696
CATHERINE ALCORN
Date Signed 21 MAR 25
ARIZONA, U.S.A.

Client/Project
Taxiway E Realignment
WILLIAMS, AZ U.S.A.

Project No.: 181711365
File Name: 23009 E5.7 - TAXIWAY LIGHT TE

Scale: NTS

JBW	RD	CA	2025.03.21
Dwn.	Dsgn.	Chkd.	YYYY.MM.DD

Title
ELECTRICAL DETAILS - ELEVATED EDGE LIGHT

Revision: 0 Sheet: 30 of 30

Drawing No.
E5.7

o:\projects\23000\23009\ha class (crm) taxiway e realignment and airfield signage\cad\cad sheets\taxiway e realignment\23009 e5.7 - taxiway light te
2025.03.20 2:52:27 PM
ORIGINAL SHEET - ANSI D