Docusign Envelope ID: 4069BD5A-1B40-8EB2-8027-936A78D1D4A5

F.H.W.A. REGION	STATE	PROJECT NO.	SHEET NO.	TOTAL SHEETS	RECORD DRAWING
9	AZ	TT0372	1	224	

MARICOPA COUNTY

PLANS FOR THE CONSTRUCTION OF NORTHERN PARKWAY, 103RD AVENUE TO 91ST AVENUE - PHASE 1

PROJECT NO. TT0372

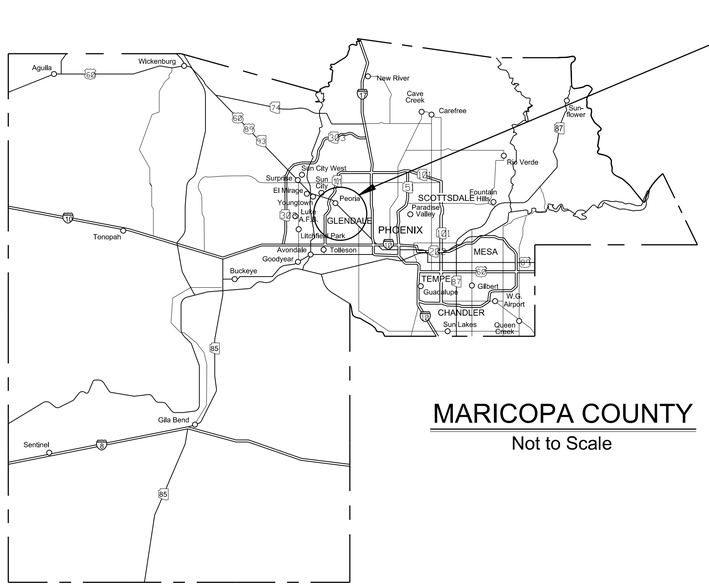

MARICOPA COUNTY
Not to Scale

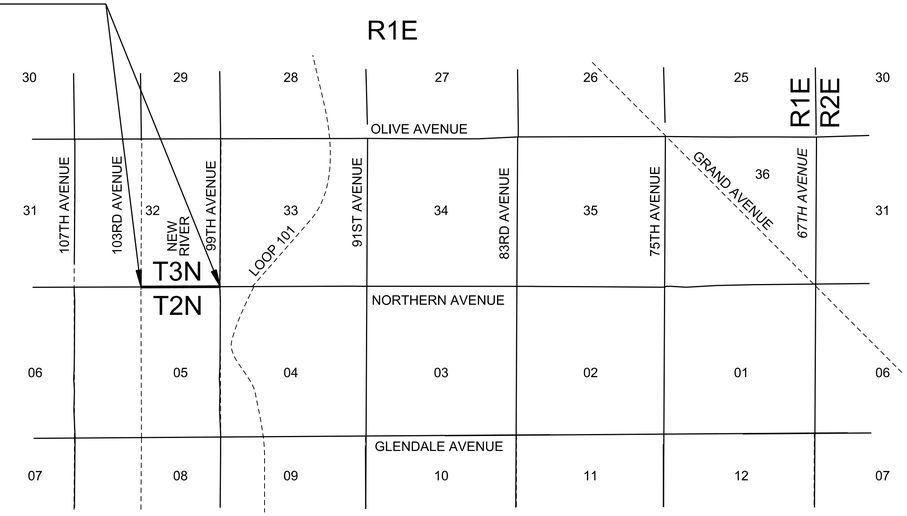

VICINITY MAP
Not to Scale

LOCATIONS FOR AS-BUILT INDEXING

Township	Range	Section	Quarter
2N	1E	05	NE
2N	1E	05	NW
3N	1E	32	SE
3N	1E	32	SW
2N	1E	04	NW
3N	1E	33	SW

IN COOPERATION WITH:
ARIZONA DEPARTMENT OF TRANSPORTATION
CITY OF GLENDALE
CITY OF PEORIA
CITY OF EL MIRAGE

MARICOPA COUNTY DEPARTMENT OF TRANSPORTATION

RECOMMENDED FOR CONSTRUCTION:

DocuSigned by: Marcellus Lisotta — 5/28/2026
MARCELLUS LISOTTA, P.E.
PROJECT MANAGER — DATE

ISSUED FOR CONSTRUCTION:

Signed by: Jesse Gutierrez — 5/28/2026
JESSE GUTIERREZ, P.E.
COUNTY ENGINEER/
DIRECTOR OF TRANSPORTATION — DATE

COUNTY BOARD OF SUPERVISORS

KATE BROPHY MCGEE - CHAIR

DISTRICT 1	MARK STEWART
DISTRICT 2	THOMAS GALVIN
DISTRICT 3	KATE BROPHY MCGEE
DISTRICT 4	DEBBIE LESKO
DISTRICT 5	STEVE GALLARDO

BRENAN POE — REGISTERED PROFESSIONAL ENGINEER — ARIZONA, U.S.A.

TRACS NO.

$PLTDRVS$ $PENTBLS$ 10:27:22 AM 5/7/2026 pw://tyli-pw.bentley.com:tyli-pw-01/Documents/Projects/221991.00_TT0372/600_CADD/05_Official/Dgn_PHASE 1/Sheets/TT0372_S5_FaceSht.dgn$USER$

F.H.W.A. REGION	STATE	PROJECT NO.	SHEET NO.	TOTAL SHEETS	RECORD DRAWING
9	AZ	TT0372	2	224	

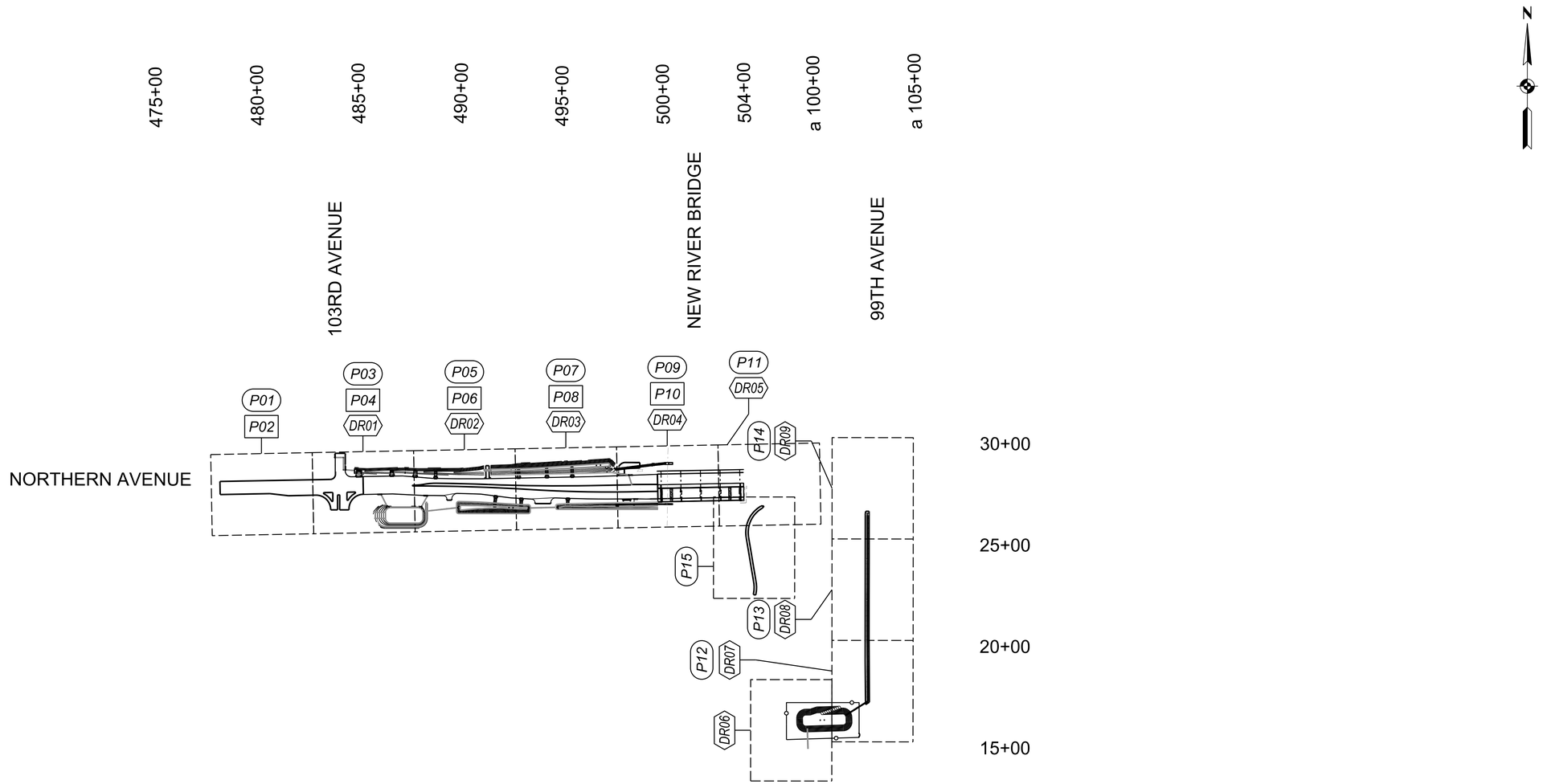

KEY MAP

Not to Scale

- (PXX) PLAN/PLAN & PROFILE SHEETS
- [PXX] PROFILE SHEETS
- ⟨DRXX⟩ STORM DRAIN PLAN SHEETS

SCALE: Hor: 1"=300'
Vert: N/A

300 0 300 600
SCALE IN FEET

Contact Arizona 811 Two Working Days Before You Dig
ARIZONA811 BLUE STAKE, INC.
Call 811 or Click Arizona811.com

NO.	REVISION	BY	DATE
3			
2			
1			

MARICOPA COUNTY

NORTHERN PARKWAY
103RD AVENUE TO 91ST AVENUE - PHASE 1
PROJECT NO. TT0372

	BY	DATE
DESIGNED	B. POE	05/2026
DRAWN	C. BURDETT	05/2026
CHECKED	J. BARR	05/2026

BRENAN POE
Registered Professional Engineer
ARIZONA, U.S.A.

TYLin

KEY MAP

SHEET GN01

TRACS NO.

pw://tylj-pw.bentley.com:tylj-pw-01/Documents/Projects/221991.00_TT0372/600_CADD/05_Official/Dgn_PHASE 1/Sheets/TT0372_SS_KeyMap.dgn$NAME$ $USER$ 10:28:04 AM 5/7/2026 $PENTBLS$ $PLTDRVS$

F.H.W.A. REGION	STATE	PROJECT NO.	SHEET NO.	TOTAL SHEETS	RECORD DRAWING
9	AZ	TT0372	3	224	

ABBREVIATIONS *

AASHTO.... American Association of State Highway and Transportation Officials
AB..... Aggregate Base
Abut..... Abutment
AC..... Asphaltic Concrete
AC..... Aluminum Cap
ACBC..... Asphaltic Concrete Base Course
ACFC..... Asphalt Concrete Friction Course
ACI..... American Concrete Institute
ACP..... Asbestos Cement Pipe
ACSC..... Asphalt Concrete Surface Course
ADOT..... Arizona Department of Transportation
Ahd..... Ahead
AISC..... American Institute of Steel Construction
AL..... Aluminum
APS..... Arizona Public Service Company
Asph..... Asphalt
ASTM..... American Society for Testing Materials
AWS..... American Welding Society

B/C..... Back of Curb
BC..... Brass Cap
BCR..... Begin Curb Return
BCT..... Breakaway Cable Terminal
Bdy..... Boundary
Bev..... Bevel(ed)
BFS..... Begin Full Super
Bit..... Bituminous
Bk..... Back
Bkfl..... Backfill
BLM..... Bureau of Land Management
BM..... Bench Mark
BOR..... Bureau of Reclamation
Br..... Bridge

C&G..... Curb and Gutter
Cab..... Cabinet
CAP..... Corrugated Aluminum Pipe
CAPA..... Corrugated Aluminum Pipe Arch
CB..... Catch Basin
CBC..... Concrete Box Culvert
CG..... Cattle Guard
CIP..... Cast Iron Pipe
CIPP..... Cast-in-Place Pipe
CITY..... Municipality/City/Town Utility
CL..... Centerline
Clr..... Clear(ance)
CLD..... Concrete Lined Ditch
CLK..... Century Link
CMP..... Corrugated Metal Pipe
CMPA..... Corrugated Metal Pipe Arch
CO..... Clean Out
Conc..... Concrete
Conn..... Connection
Const..... Construction
Cont..... Continuous
Cop..... Copper
COP..... City of Peoria
Cor..... Corner
Corr..... Correction (VPI to VC)

CP..... Concrete Pipe
CR..... Crown
CSP..... Corrugated Steel Pipe
CSPA..... Corrugated Steel Pipe Arch
CTB..... Concrete Treated Base

DA..... Drainage Area
DBC..... Direct Buried Cable
DDI..... Diverging Diamond Intersection
DE..... Drainage Easement
Defl..... Deflection
Det..... Detail
Dia..... Diameter
DIP..... Ductile Iron Pipe
Drn..... Drain(age)
D/W..... Driveway
Dwg..... Drawing

E..... Electric(ity)
e..... External
EA..... Each
ECR..... End Curb Return
EFS..... End Full Super
El..... Elevation
Emb..... Embankment
EP..... Edge of Pavement
Esmt..... Easement
Exc..... Excavation
Exist..... Existing
Exp Jt..... Expansion Joint

F/C..... Face of Curb
FCDMC..... Flood Control District of Maricopa County
Fd..... Found
FF..... Finished Floor (Elevation)
FH..... Fire Hydrant
FO..... Fiber Optic
Fwy..... Freeway

G..... Gas
GFL..... Gutter (Flow Line Elevation)
ga..... Gauge
GB..... Grade Break
GLO..... General Land Office
GM..... Gas Meter
Gnd..... Ground
GP..... Guy Pole
Gr..... Grade
GR..... Guardrail
GV..... Gas Valve

HDPE..... High Density Polyethylene
Hdwl..... Headwall
HERGRCP Horizontal Elliptical Rubber Gasket Reinforced Concrete Pipe
HH..... Hand Hole
Hi..... High
HW..... High Water

ID..... Inside Diameter
ift..... International Feet
Inv..... Invert
Irr..... Irrigation
L..... Length of Curve

LC..... Long Chord
LS..... Lump Sum
Lt..... Left
MAG..... Maricopa Association of Governments
Matl..... Material
MC..... Maricopa County
MCDOT.... Maricopa County Department of Transportation
MGS..... Midwest Guardrail System
MH..... Manhole
Min..... Minimum
Mkd..... Marked
Mod..... Modify
Mon..... Monument

NC..... Normal Crown
NPDES..... National Pollutant Discharge Elimination System
NTS..... Not to Scale

OC..... On Center
OD..... Outside Diameter
OFF..... Offset

P..... Pavement (Surface Elevation)
PE..... Polyethylene
Pl..... Plastic
Ped..... Pedestal
PC..... Point of Curvature
PCC..... Point of Compound Curvature
PCC..... Portland Cement Concrete
PCCP..... Portland Cement Concrete Pavement
PH..... Pothole
PI..... Point of Intersection
Pkwy..... Parkway
PMTR..... Polymer Modified Terminal Blend Rubberized
POB..... Point of Beginning
POC..... Point on Curve
POE..... Point of End
POT..... Point on Tangent
PP..... Power Pole
PRC..... Point of Reverse Curvature
Prel..... Preliminary
Proj..... Project
Prop..... Proposed
PSS..... Pavement Structural Section
PT..... Point of Tangency
PVC..... Point of Vertical Curvature
PVC..... Poly Vinyl Chloride
PVI..... Point of Vertical Intersection
Pvmt..... Pavement
PVRC..... Point of Vertical Reverse Curvature
PVT..... Point of Vertical Tangency

Q..... Quantity of Drainage Runoff
Qtr..... Quarter

R..... Radius
R..... Range
RCP..... Reinforced Concrete Pipe
Rdwy..... Roadway

Rebar..... Reinforcing Bar
Reinf..... Reinforced(ing)
Reloc..... Relocate
Ret..... Retain(ing)
RGRCP..... Rubber Gasket Reinforced Concrete Pipe
RR..... Railroad
Rt..... Right
R/W..... Right of Way

S..... Slope
SCCP..... Steel Cylindrical Cement Pipe
Sch..... Schedule
SCS..... Soil Conservation Service
SD..... Sight Distance
SD..... Storm Drain
SE..... Slope Easement
Sec..... Section
SG..... Subgrade
Shldr..... Shoulder
Shr..... Shrinkage
Sht..... Sheet
Sk..... Skew
Specs..... Specifications
SRP..... Salt River Project
SS..... Sanitary Sewer
SSD..... Stopping Sight Distance
Sta..... Station
Std..... Standard
Stl..... Steel
Struc..... Structural
Subdiv..... Subdivision
Super..... Superelevation
Sw..... Swell
S/W..... Sidewalk
SWG..... Southwest Gas Corporation

T..... Tangent Length
T..... Telephone
T..... Township
TC..... Top of Curb
TCB..... Temporary Concrete Barrier
TCE..... Temporary Construction Easement
Trans..... Transition
TS..... Traffic Signal Pole
TSC..... Traffic Signal Conduit
Typ..... Typical

UUA..... Unincorporated Urbanized Areas
VC..... Vertical Curve
VCP..... Vitrified Clay Pipe
VG..... Valley Gutter
VLVR..... Very Low Volume Road
VPD..... Vehicles per Day

W..... Water
w/..... with
w/o..... without
WM..... Water Meter
WV..... Water Valve
WWF..... Welded Wire Fabric

* Standard dictionary abbreviations not shown.

SYMBOLS

Exist Edge of Pvmt
Exist R/W Line
Property Line
Railroad Tracks
New Edge of Pavement
New Unpaved Roadway/Driveway
Catch point Top of Embankment Cut
Catch point Toe of Filled Slope
Trans Cut to Fill
Exist Barb Wire Fence
Exist Chain Link Fence & Gate
Exist Block Wall & Gate
Exist Wood Fence
Exist Guardrail
Exist Water Line**
Exist Sanitary Sewer Line**
Exist Buried Electric Line
Exist Electric Duct Bank
Exist Gas Line (Matl)**
Exist Irrigation Line (Matl)**
Exist Storm Drain Line (Matl)**
Exist Buried Cable TV Line
Exist Buried Telephone Line
Exist Fiber Optic Line
New Pipe **
Easement
Forest or Reservation Boundary
Flow Line
Jurisdictional Boundary
New Guardrail
New Chain Link Fence
New Barb Wire Fence
New Handrail
Overhead Power
Overhead Telephone
New Retaining Wall

** Scale to Actual Width for Pipes > 12"

Ground Surface (Section)
New Bit Pvmt (Section)
New ABC (Section)
Riprap (Plan & Section)
New Conc (Section)
Angular Riprap
Milling
Roadway Obliteration
New Bit Pvmt (Plan)
New Conc Pvmt (Plan)
Angle Point
Bench Mark
Center Line
Flow Line
Monument Line
Property Line or Plate

Manhole
US Mail Box
Water Valve
Water Meter
Wood Utility Pole
Steel Utility Pole
Pole Steel
Concrete Utility Pole
Guy Wire
Street Light on Mast Arm
Utility Pedestal
Irr Stand Pipe
Fire Hydrant
Slope Direction
Survey Monument
Survey Monument in HandHole
Boring Location
Flow Arrow Symbol

Street Name Sign
Sign (1 Post)
Sign (2 Posts)
Traffic Control Cabinet
Traffic Pull Box
Traffic Signal Pole and Foundation
Tree or Hedge Line
Palm Tree
Deciduous Tree
Mesquite Tree
Pine Tree
Saguaro Cactus
Palo Verde Tree
Yucca Cactus
Cholla Cactus
Prickly Pear Cactus
Barrel Cactus

GENERAL NOTES

1 All work shall conform with the 2026 Edition of the Uniform Standard Specifications for Public Works Construction published by the Maricopa Association of Governments (MAG) as modified by the MCDOT Supplement to the MAG Standard Specifications dated January, 2026 and the project Special Provisions.

2 Standard Details refer to the Maricopa County Supplement to the MAG Standard Specifications and Details unless noted otherwise.

3 All existing utility lines shown on the plans are from available utility records. The Contractor shall verify the actual location before starting construction. The Contractor shall contact "Arizona811" at 811 or (602) 263-1100 two working days prior to beginning any excavation.

4 Utilities interfering with construction shall be reset or relocated by the utility company concerned unless noted otherwise.

5 Disposal of all waste material, broken concrete, etc. will be the responsibility of the Contractor, subject to the approval of the Engineer.

6 All stations and call out distances left and right refer to the construction centerline unless noted otherwise.

7 All trees, bushes and obstacles inside the existing right-of-way which interfere with construction, shall be removed by the Contractor unless noted otherwise. Any fences damaged during construction shall be restored by the Contractor at no additional cost to the County.

8 All paved turnouts shall have the same asphalt and base requirements as the adjacent roadway unless noted otherwise.

9 The Contractor shall obtain all the necessary permits from local governments for work within their jurisdiction.

10 Construction activities shall not interfere with mail delivery. The Contractor shall temporarily relocate mailboxes as necessary to provide uninterrupted mail service. This is a non-pay item.

11 Irrigation sleeves are shown on Paving Plans. See Irrigation Pipe Sleeve Summary Sheets for more information.

MCDOT FCD GENERAL NOTES

1. All work perfomed within Flood Control District of Maricopa County (District) rights-of-way (ROW) shall conform to the latest District Standard Procedures and Details as published on the District's web site.

2. The Permittee shall obtain a copy of the executed District ROW Use Permit prior to commencement of work within District right-of-way, maintain a copy of the permit and stamped approved plans on the project site at all times, and shall be available upon request.

3. The Permittee shall notify the District's assigned Operations and Maintenance (O&M) Inspector or Dam Safety Inspector at least 48 hours in advance prior to any excavation, backfill, slurry, concrete, and/or riprap placement being performed within the District's ROW. Refer to the executed District Permit for the O&M Inspector's contact information. If work is impacting a District Levee, Dam or Flood Retarding Structure (FRS), refer to the executed District Permit for the Levee/Dam Safety Inspector's contact information.

4. The Permittee performing excavation operations is responsible for locating and protecting all underground utilities. To expedite this process, the Permittee shall call Arizona 811 (formerly Arizona Blue Stake) at 811 or 1-800-782-5348 to identify underground utilities at least 48 hours in advice prior to start of the work.

5. Any damage or distrubance to District structures, equipment, materials, vegetation, or surrounding District ROW shall be replaced or repaired, in-kind, to the satisfaction of the District's O&M Inspector or Levee/Dam Safety Inspector.

6. In the event the terms and conditions in the District's permit are not consistent with the District-approved plans, the District's permit will have precedence.

7. In order to close out the District's Permit and release performance bonds, all work (including associated punch-list items) must be completed in full to the satisfaction of the District's inspector and engineer. Certified as-built plans along with required quality assurance tests must be provided and accepted by the District, and all easements required by the project must be recorded prior to Permit closeout. If the work only involves geotechnical analysis, site investigations, surveys, or flood related studies, then finalized reports, studies and/or survey plans must be provided and accepted by the District prior to Permit closeout.

DESIGN DATA

NORTHERN AVENUE
CLASSIFICATION.....PRINCIPAL ARTERIAL, URBAN
TERRAIN.....LEVEL
DESIGN SPEED.....55 MPH
(2018) AVERAGE DAILY TRAFFIC.....23,300-36,050/VPD
(2040) AVERAGE DAILY TRAFFIC.....35,000-70,000/VPD

99TH AVENUE
CLASSIFICATION.....PRINCIPAL ARTERIAL, URBAN
TERRAIN.....LEVEL
DESIGN SPEED.....55 MPH
(2018) AVERAGE DAILY TRAFFIC.....2,723/VPD
(2040) AVERAGE DAILY TRAFFIC.....9,000/VPD

SEE GN03 FOR INDEX OF SHEETS

PRIMARY CONTROL

GPS NAME:	553_2015
NGS PID:	N/A
LATITUDE:	33°32'56.34096000" N
LONGITUDE:	112°17'23.673289" W
ELLIPSOID HEIGHT:	991.6950'
GRID NORTHING:	927,477.890'
GRID EASTING:	586,286.965'
GROUND NORTHING:	927,626.286'
GROUND EASTING:	586,380.771'
ELEVATION (NAVD88 GDACS):	1090.896'

LENGTH OF PROJECT

Northern Avenue STA 478+24.00 TO STA a 100+40.00 = 2958.03 ft

99th Avenue STA 16+83.80 TO STA 26+20.00 = 936.20 ft

TOTAL = 2,954.23 ft

2,955/5280 = 0.56 miles

PROJECT DISTURBED AREA

TOTAL DISTURBED AREA: 483,847.351 ft² = 11.11 Acres

NO.	REVISION	BY	DATE
3			
2			
1			

MARICOPA COUNTY

NORTHERN PARKWAY
103RD AVENUE TO 91ST AVENUE - PHASE 1
PROJECT NO. TT0372

	BY	DATE
DESIGNED	B. POE	05/2026
DRAWN	C. BURDETT	05/2026
CHECKED	J. BARR	05/2026

BRENAN POE
Date Signed 05/06/2026
ARIZONA, U.S.A.

TYLin

GENERAL NOTES

SHEET GN02

TRACS NO.

$PLTDRVS$ $PENTBLS$ 10:28:19 AM 5/7/2026 $USER$ $TIME$
pw://tyli-pw.bentley.com:tyli-pw-01/Documents/Projects/221991.00_TT0372/600_CADD/05_Official/Dgn_PHASE 1/Sheets/TT0372_SS_GeneralNotes.dgn

F.H.W.A. REGION	STATE	PROJECT NO.	SHEET NO.	TOTAL SHEETS	RECORD DRAWING
9	AZ	TT0372	4	224	

INDEX

TITLE	SHEET NO.
FACE SHEET	01
KEY MAP	02 (GN01)
GENERAL NOTES	03 (GN02)
INDEX OF SHEETS	04 (GN03)
QUANTITY SUMMARY	05 - 07 (QS01-QS03)
PAVEMENT STRUCTURAL SECTIONS	08 (PS01)
TYPICAL SECTIONS	09 - 13 (TY01-TY05)
GEOMETRIC CONTROL	14 - 18 (GC01-GC05)
BARRIER SUMMARY	19 (BS01)
PAVING PLAN AND PROFILES	20 - 34 (P01-P15)
SIDEWALK RAMP	35 (RD01)
DRIVEWAY PLAN AND PROFILES	36 - 38 (RD02-RD04)
CROWN AND CROSS SLOPE DETAILS	39 - 42 (RD05-RD08)
SIDEWALK TRANSITION DETAIL	43 (RD09)
INTERSECTION DETAIL PLANS	44 (ID01)
STORM DRAIN PLANS	45 - 54 (DR01-DR10)
DRAINAGE PROFILES	55 - 59 (DP01-DP05)
DRAINAGE DETAILS	60 - 65 (DT01-DT06)
UTILITY PLANS	66 - 80 (U00-U14)
TRAFFIC CONTROL NOTES	81 (TC01)
TRAFFIC CONTROL QUANTITIES	82 (TC02)
MAINTENANCE OF TRAFFIC	83 (TC03)
TRAFFIC CONTROL DETAILS	84 - 86 (TC04-TC06)
ADVANCE WARNING SIGNS	87 (TC07)
TRAFFIC CONTROL PLANS	88 - 105 (TC08-TC25)
SIGNING & PAVEMENT MARKING FACE SHEET	106 (SN00)
SIGNING & PAVEMENT MARKING NOTES	107 - 108 (SN01-SN02)
SIGNING & PAVEMENT MARKING QUANTITIES	109 (SN03)
SIGN SUMMARY	110 - 111 (SS01-SS02)
SIGNING & PAVEMENT MARKING PLANS	112 - 116 (SM01-SM05)
SIGN FORMATS	117 (SM06)
STREET LIGHTING GENERAL NOTES	118 - 122 (LN01-LN05)
STREET LIGHTING PLANS	123 - 127 (LT01-LT05)
LIGHTING POLE SCHEDULE	128 (LT06)
ROADWAY LIGHTING CONDUCTOR SCHEDULE	129 (LT07)
LIGHTING DETAILS	130 -132 (LT08-LT10)
TRAFFIC SIGNAL PLANS	133 - 138 (ST01-ST06)
ITS PLANS	139 - 144 (IC01-IC06)
BRIDGE PLANS	145 - 179 (SB01-SB35)
FOUNDATION DATA	180 - 185 (FD01-FD06)

TITLE	SHEET NO.
EROSION CONTROL INDEX	186 (ED01)
EROSION CONTROL SUMMARY	187 (ED02)
EROSION CONTROL DETAILS	188 - 190 (ED03-ED05)
EROSION CONTROL PLANS	191 - 194 (EC01-EC04)
LANDSCAPE GENERAL NOTES	195 (LD01)
LANDSCAPE SHEET KEYMAP	196 (LD02)
LANDSCAPE DETAILS	197 - 198 (LD03-LD04)
LANDSCAPE PLANTING PLANS	199 - 205 (LS01-LS07)
LANDSCAPE IRRIGATION NOTES	206 (ID01)
LANDSCAPE IRRIGATION DETAILS	207 - 208 (ID02-ID03)
LANDSCAPE IRRIGATION SLEEVE SUMMARY	209 (ID31)
LANDSCAPE IRRIGATION PLANS	210 - 216 (IR01-IR07)
BRIDGE AESTHETICS DETAILS	217 - 224 (BR301-BR308)

Contact Arizona 811 Two Working Days Before You Dig
Call 811 or Click Arizona811.com

NO.	REVISION	BY	DATE
3			
2			
1			

MARICOPA COUNTY

NORTHERN PARKWAY
103RD AVENUE TO 91ST AVENUE - PHASE 1
PROJECT NO. TT0372

	BY	DATE
DESIGNED	B. POE	05/2026
DRAWN	C. BURDETT	05/2026
CHECKED	J. BARR	05/2026

BRENAN POE
Date Signed 05/06/2026
ARIZONA, U.S.A.

TYLin

INDEX OF SHEETS

SHEET GN03

TRACS NO.

GN_bwpdf.pltcfg
MCDOT_TYLIN_PRINT.tbl
2:56:12 PM 5/8/2026
Courtney Burdett OpenRoads_Imperial
c:\bmstylin_amer\d0573032\TT0372_SS_Index.dgn

F.H.W.A. REGION	STATE	PROJECT NO.	SHEET NO.	TOTAL SHEETS	RECORD DRAWING
9	AZ	TT0372	5	224	

SUMMARY OF ESTIMATED QUANTITIES

ITEM NUMBER	ITEM DESCRIPTION	UNIT	SHEET NUMBER															SHEET TOTAL	PROJ. TOTAL
			P01	P03	P05	P07	P09	P11	P12	P13	P14	P15							
301.01000	Subgrade Preparation	SY	3657	6064	4590	5853	2657		593	933	275	625						25,247	**25,247**
310.03001	Aggregate Base Course	CY	1727	2498	1348	1613	674		198	311	92	69						8,530	**8,530**
321.01202	Asphalt Concrete Pavement (Superpave ½ in Mix, High Traffic)	Ton	398	660	502	638	298		107	168	49							2,820	**2,820**
321.01302	Asphalt Concrete Pavement (Superpave ¾ in Mix, High Traffic)	Ton	597	989	735	948	380		71	112	33							3,865	**3,865**
324.01080	Portland Cement Concrete Pavement (PCCP) 8 in Thick	SY										625						625	**625**
329.01000	Bituminous Tack Coat SS-1h or CSS-1h, Diluted	Ton	1.22	2.03	1.51	1.94	0.78		0.2	0.3	0.09							9	**9**
340.01110	Vertical Curb & Gutter, Type A, H=6 in, MAG Det 220	LF		719	937	886	363											2,905	**2,905**
340.01160	Single Curb, Type B, MAG Det 222	LF					43											43	**43**
340.01210	Concrete Sidewalk, MAG Det 230	SF		5578	6860	6695	3987											23,120	**23,120**
340.01314	30 ft R Directional Curb Ramp Attached SW Dual Ramp MAG Det 237-1	EA		1														1	**1**
340.01405	Driveway Entrance, MAG Det 250-1, Commercial/Industrial	SF			254		901											1,155	**1,155**
340.01459	Driveway 9 in Thick Class A Concrete	SF					154											154	**154**
340.01479	Driveway, City of Peoria Std Det PE-251-2	SF			769	2240												3,009	**3,009**
345.01100	Adjust Exist Manhole Frame & Cover, MAG Det 422, Type A	EA	1	5	1	1	4											12	**12**
345.01200	Adjust Valve Box & Cover, MAG Det 391-1-A	EA	1	9	2	2	0											14	**14**
350.01800	Remove Concrete Curb and Gutter	LF		802	621	408												1,831	**1,831**
350.01803	Remove Concrete Scupper						1											1	**1**
350.01900	Remove Concrete Sidewalk	SF		2130	2580	2459	778					6078						14,025	**14,025**
350.01901	Remove Concrete Sidewalk Ramp	EA		2														2	**2**
350.01905	Remove Post	EA			2	7												9	**9**
350.02000	Remove Gate	EA			2	1	1	1										5	**5**
350.02101	Remove Concrete Driveway	SF			223													223	**223**
350.02251	Remove Concrete Spillway	SF					343											343	**343**
350.05000	Remove Guardrail	LF					108											108	**108**
350.07501	Removal of Pavement	SY	3657	5172	3005	2676	1037		592	931	232							17,302	**17,302**
350.30005	Remove Barbed Wire Fence	LF		335	482	502	53	349										1,722	**1,722**
350.31000	Remove Chain Link Fence	LF			353	371	57	114										895	**895**
350.32000	Remove Block Wall	LF		327	106													433	**433**
351.01670	New Water Meter and Service Line Tap, COP Std Det PE-363	EA		1														1	**1**
405.01100	Survey Marker, Type A, MAG Det 120	EA		1														1	**1**
417.04000	Furnish and Install Barrier Attenuator	EA					1											1	**1**
421.14100	Barbed Wire Fence, Type 1, ADOT C-12.10	LF		306	504	519	44											1,373	**1,373**
515.20006	Bollard, Type 1, 6 in Diameter, MAG Det 140	EA										1						1	**1**
520.01035	Safety Rail, Height 3 ft - 6 in MAG Det 145	LF				151	247											398	**398**
610.27601	Remove Existing Hydrant and Replace, Peoria Std PE-350-2	EA		1														1	**1**
610.27602	Remove Existing Fire Hydrant and Replace, Glendale Std G-660	EA		1														1	**1**

NOTES:
1. See Sheet SB04 for Bridge Quantity Summary.
2. See Sheet SN03 for Signing and Pavement Marking Quantity Summary.

Contact Arizona 811 Two Working Days Before You Dig
Call 811 or Click Arizona811.com

NO.	REVISION	BY	DATE
3			
2			
1			

MARICOPA COUNTY

NORTHERN PARKWAY
103RD AVENUE TO 91ST AVENUE - PHASE 1
PROJECT NO. TT0372

	BY	DATE
DESIGNED	B. POE	05/2026
DRAWN	C. BURDETT	05/2026
CHECKED	J. BARR	05/2026

BRENAN POE
Date Signed 05/20/2026
ARIZONA, U.S.A.

TYLin

QUANTITY SUMMARY

SHEET QS01

TRACS NO.

OpenRoads_Imperial 3:56:14 PM 5/20/2026 MCDOT_TYLIN_HALF_PRINT.tbl TYLI_GN_bwpdf Half.pltcfg
c:\bmsi\tylin_amer\d0573032\TT0372_SS_QuantitySummary_01.dgn

F.H.W.A. REGION	STATE	PROJECT NO.	SHEET NO.	TOTAL SHEETS	RECORD DRAWING
9	AZ	TT0372	6	224	

SUMMARY OF ESTIMATED DRAINAGE QUANTITIES

ITEM NUMBER	ITEM DESCRIPTION	UNIT	SHEET NUMBER									TOTAL
			DR01	DR02	DR03	DR04	DR05	DR06	DR07	DR08	DR09	
215.01100	Channel Excavation	CY	1680	1500								3180
215.01510	Earthwork for Retention Basins	CY	5239	14706	14665	1159		25174				60943
220.10150	Riprap, D50=6 in	CY	8	8	3	2	43	12				76
220.10225	Riprap, D50=9 in	CY	60	72	38							170
220.10300	Riprap, D50=12 in	CY				20						20
220.20380	Grouted Riprap, D50=12 in	CY				18						18
301.13012	Maintenance Road, FCD Det FCD201-2	SF	206					41				247
350.01100	Remove Pipe, Backfill & Compact, D<30 in	LF		66	40							106
350.01500	Remove Headwall	EA		2	2	1						5
350.01800	Remove Concrete Curb & Gutter	LF						310				310
350.01803	Remove Scupper	EA	1	2	1							4
350.01997	Remove Junction Structure	EA				1						1
350.02000	Remove Gate	EA						1				1
350.02101	Remove Concrete Driveway	SF				84						84
350.07501	Removal of Pavement	SY						2538				2538
350.31000	Remove Chain Link Fence	LF						512				512
420.00126	6 ft Chain Link Fence, Type 1, ADOT C-12.20	LF						1080				1080
420.02624	6 ft x 24 ft Chain Link Fence Gate, MAG Det 160	EA						1				1
505.06508	Concrete Scupper, MAG Det 206, S/W=6 ft, 2-4 ft Curb Opening	EA		2	1							3
505.06512	Concrete Scupper Spillway, MAG Det OROW-510-2, 2-4 ft Curb Openings	LF		138	101							239
505.06513	Concrete Scupper Spillway, MAG Det OROW-510-2, 3-4 ft Curb Openings	LF	36									36
505.06514	Concrete Scupper, MAG Det 206, S/W=8 ft, 2-4 ft Curb Opening	EA		2	2							4
505.06516	Concrete Scupper Spillway, MAG Det OROW-510-2, 5-4 ft Curb Openings	LF	22									22
505.06517	Concrete Scupper, MAG Det 206, S/W=8 ft, 3-4 ft Curb Opening	EA	2									2
505.06518	Concrete Scupper, MAG Det 206, S/W=8 ft, 5-4 ft Curb Opening	EA	1									1
505.12311	Double Catch Basin, ADOT C-15.81, Modified	EA			1							1
505.12312	Triple Catch Basin, ADOT C-15.81, Modified	EA				1						1
505.15117	Catch Basin, MAG Det 542-1, Type M-1, L=17 ft	EA	3	1		2						6

NO.	REVISION	BY	DATE
3			
2			
1			

MARICOPA COUNTY

NORTHERN PARKWAY
103RD AVENUE TO 91ST AVENUE - PHASE 1
PROJECT NO. TT0372

	BY	DATE
DESIGNED		5/6/2026
DRAWN		5/6/2026
CHECKED		5/6/2026

Registered Professional Engineer (Civil) CERTIFICATE NO. 62327 WILLIAM FOGELL STATE OF ARIZONA U.S.A.

J2 Design

QUANTITY SUMMARY

SHEET QS02

TRACS NO.

TYLI_GN_bwpdf.pltcfg
MCDOT_TYLIN_PRINT.tbl
5/21/2026 2:23:12 PM
OpenRoads_Imperial
c:\bmstyli-pw\abramhall__j2\designd\0573068\TT0372_SS_QuantitySummary_03.dgn

F.H.W.A. REGION	STATE	PROJECT NO.	SHEET NO.	TOTAL SHEETS	RECORD DRAWING
9	AZ	TT0372	7	224	

SUMMARY OF ESTIMATED DRAINAGE QUANTITIES

ITEM NUMBER	ITEM DESCRIPTION	UNIT	SHEET NUMBER									TOTAL
			DR01	DR02	DR03	DR04	DR05	DR06	DR07	DR08	DR09	
505.32000	Headwall, Outlet, Special Detail	EA				2						2
505.33000	Sediment Trap, MAG Det OROW-511	EA	3	4	2							9
510.14836	Concrete Junction Box, 1-48 in (in) 2-36 in (out), Special Detail	EA			1							1
520.01035	Safety Rail, Height 3 ft - 6 in, MAG Det 145	LF	140	138	127	12		24				441
523.10119	Headwall, Det 5524, Straight Type, 18 in Pipe, Modified	EA	1									1
523.10231	Headwall, Det 5524, Straight Type, 2-30 in Pipe, Modified	EA		2								2
523.12119	Headwall, Det 5524, U Type, 18 in Pipe, Modified	EA	2	1	1	1						5
523.12125	Headwall, Det 5524, U Type, 24 in Pipe, Modified	EA			2							2
523.12137	Headwall, Det 5524, U Type, 36 in Pipe, Modified	EA						1				1
523.15119	Headwall, Drop Inlet, MAG Det 501-5, 18 in Pipe, Modified	EA	1									1
523.15125	Headwall, Drop Inlet, MAG Det 501-5, 24 in Pipe, Modified	EA						1				1
523.15149	Headwall, Drop Inlet, MAG Det 501-5, 48 in Pipe, Modified	EA			1							1
523.20118	Inlet with Trash Rack, 18 in Pipe, MAG Det 502-1	EA	1									1
523.20120	Outlet Barrier Gate For 24" Pipe, ADOT Std. Det C-13.75	EA				1						1
523.20122	Outlet Barrier Gate For 36" Pipe, ADOT Std. Det C-13.75	EA				2						2
523.20124	Inlet with Trash Rack, 24 in Pipe, MAG Det 502-1	EA						1				1
523.20148	Inlet with Trash Rack, 48 in Pipe, MAG Det 502-1	EA			1							1
618.00818	Pipe Plug, MAG Det 427, 18 in Pipe	EA				1			1	2	2	6
618.00836	Pipe Plug, MAG Det 427, 36 in Pipe	EA									1	1
618.00924	Concrete Pipe Collar for 24 in Pipe, MAG Det 505	EA			1							1
618.20418	18 in RGRCP, Class IV	LF	269	158	106	99			8	16	16	672
618.20424	24 in RGRCP, Class IV	LF			176	192		104				472
618.20430	30 in RGRCP, Class IV	LF		70								70
618.20436	36 in RGRCP, Class IV	LF			80	386		180	350	500	28	1524
618.20448	48 in RGRCP, Class IV	LF			24							24
625.01100	Storm Drain Manhole, MAG Det 520 & 522	EA	2		1			1	1	2	1	8
625.01107	Storm Drain Outlet, ADOT Det C-13.76	EA						1				1
625.10230	Drywell, MaxWell Plus or Equal, Basic Depth 30 ft	EA		1	1			1				3

NO.	REVISION	BY	DATE
3			
2			
1			

MARICOPA COUNTY

NORTHERN PARKWAY
103RD AVENUE TO 91ST AVENUE - PHASE 1
PROJECT NO. TT0372

	BY	DATE
DESIGNED		5/6/2026
DRAWN		5/6/2026
CHECKED		5/6/2026

Registered Professional Engineer (Civil) CERTIFICATE NO. 62327 WILLIAM FOGELL ARIZONA U.S.A.

J2 Design

QUANTITY SUMMARY

SHEET QS03

TRACS NO.

TYLI_GN_bwpdf.pltcfg
MCDOT_TYLIN_PRINT.tbl
5/21/2026 2:23:19 PM
OpenRoads_Imperial
c:\bmstyli-pw\abramhall__j2design\0573068\TT0372_SS_QuantitySummary_04.dgn

F.H.W.A. REGION	STATE	PROJECT NO.	SHEET NO.	TOTAL SHEETS	RECORD DRAWING
9	AZ	TT0372	8	224	

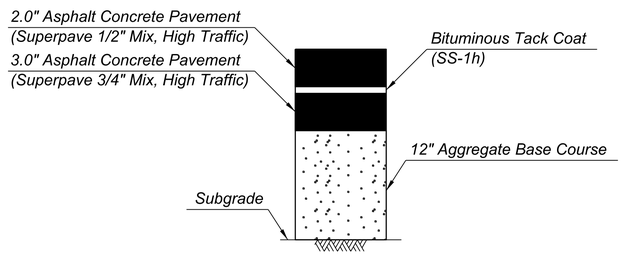

Total Thickness = 17.0"

PAVEMENT STRUCTURAL SECTION D

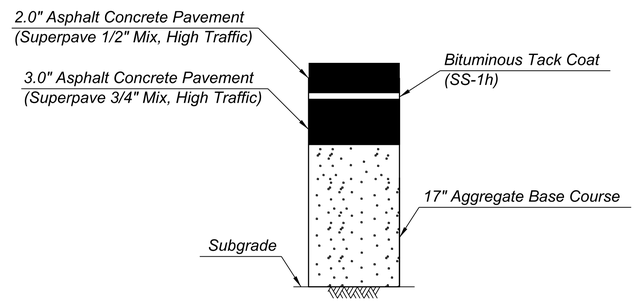

Total Thickness = 22.0"

PAVEMENT STRUCTURAL SECTION G

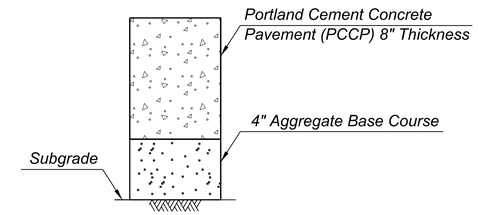

Total Thickness = 12"

PAVEMENT STRUCTURAL SECTION H

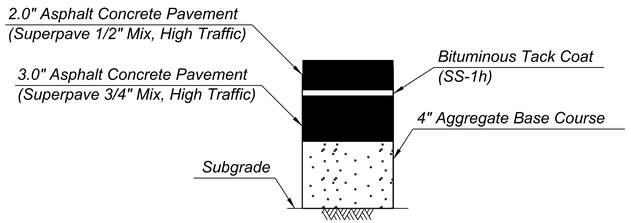

Total Thickness = 9.0"

PAVEMENT STRUCTURAL SECTION I

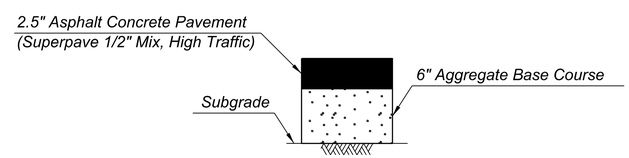

Total Thickness = 8.5"

PAVEMENT STRUCTURAL SECTION F

Contact Arizona 811 Two Working Days Before You Dig
ARIZONA811 BLUE STAKE, INC.
Call 811 or Click Arizona811.com

NO.	REVISION	BY	DATE
3			
2			
1			

MARICOPA COUNTY

NORTHERN PARKWAY
103RD AVENUE TO 91ST AVENUE - PHASE 1
PROJECT NO. TT0372

	BY	DATE
DESIGNED	B. POE	05/2026
DRAWN	C. BURDETT	05/2026
CHECKED	J. BARR	05/2026

BRENNAN POE
Date Signed 05/08/2026
ARIZONA, U.S.A.

TYLin

PAVEMENT STRUCTURAL SECTIONS

SHEET PS01

TRACS NO.

pw://tyli-pw.bentley.com:tyli-pw-01/Documents/Projects/221991.00_TT0372/600_CADD/05_Official/Dgn_PHASE 1/Sheets/TT0372_SS_Pavement_Sections01.dgn $USER$ 10:29:17 AM 5/7/2026 $PENTBLS$ $PLTDRVS$

F.H.W.A. REGION	STATE	PROJECT NO.	SHEET NO.	TOTAL SHEETS	RECORD DRAWING
9	AZ	TT0372	9	224	

A - 34.25' to 34.13', Sta 478+24 to Sta 480+69.21
34.13' to 46.14', Sta 480+69.21 to Sta 481+60.27
46.14' to 46.09', Sta 481+60.27 to Sta 482+95.41

B - 15.25', Sta 478+24 to Sta 480+69.30
15.25' to 12', Sta 480+69.30 to Sta 481+60.39
12', Sta 481+60.39 to Sta 482+95.41

C - 0', Sta 478+24 to Sta 480+69.30
0' to 15.15', Sta 480+69.30 to Sta 481+60.39
15.15' to 15.34', Sta 481+60.39 to Sta 482+95.41

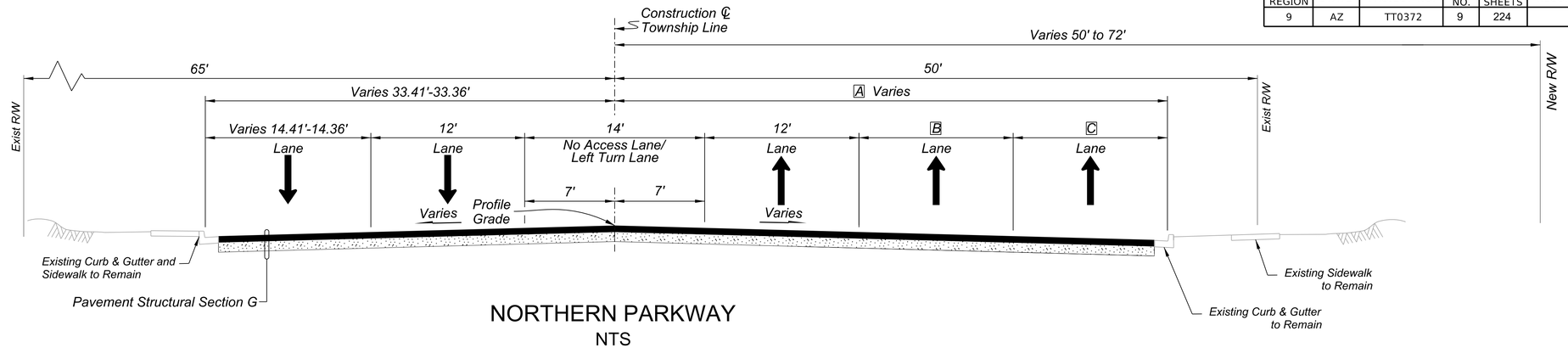

NORTHERN PARKWAY
NTS

Sta 478+24.00 to Sta 482+95.41

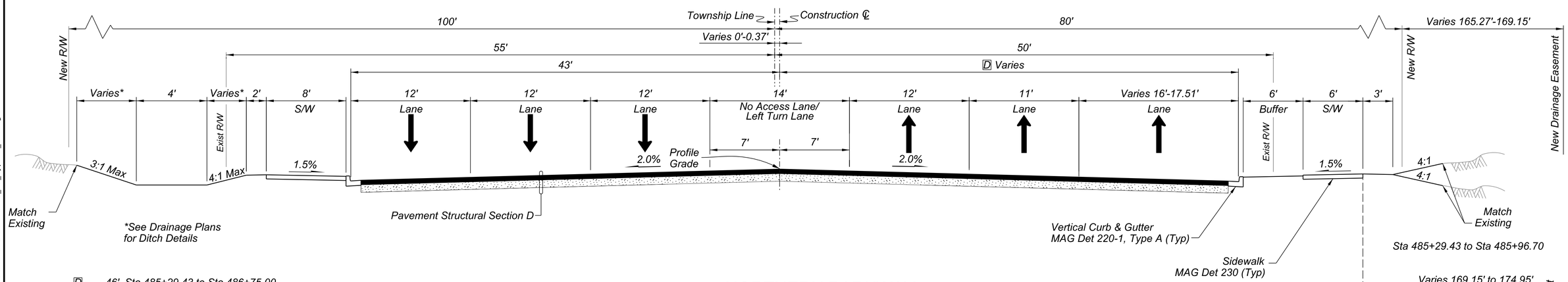

D - 46', Sta 485+29.43 to Sta 486+75.00
46' to 47.51', Sta 486+75.00 to Sta 487+00.00

NORTHERN PARKWAY
NTS

Sta 485+29.43 to Sta 487+00.00

Sta 485+29.43 to Sta 485+96.70

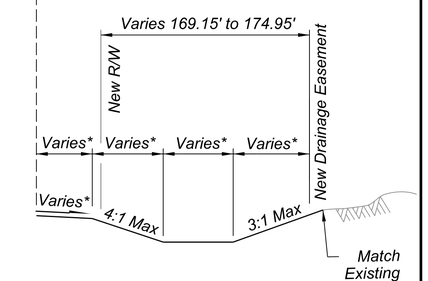

*See Drainage Plans
for Ditch Details

Sta 485+96.70 to Sta 487+00.00

NOTES:
1. Roadway width indicates width to Gutter Flow Line (GFL).

Contact Arizona 811 Two Working Days Before You Dig
ARIZONA811 BLUE STAKE, INC.
Call 811 or Click Arizona811.com

NO.	REVISION	BY	DATE
3			
2			
1			

MARICOPA COUNTY

NORTHERN PARKWAY
103RD AVENUE TO 91ST AVENUE - PHASE 1
PROJECT NO. TT0372

	BY	DATE
DESIGNED	G. MCCAIG	05/2026
DRAWN	C. STARK	05/2026
CHECKED	D. LENZER	05/2026

Registered Professional Engineer (Civil) CERTIFICATE NO. 79706 JAMES G. MCCAIG Date Signed 05/08/26

BURGESS & NIPLE
1230 W. WASHINGTON ST. SUITE 511
TEMPE, AZ 85288

TYPICAL SECTION

SHEET TY01

TRACS NO.

pw://tyli-pw.bentley.com:tyli-pw-01/Documents/Projects/2219991.00_TT0372/600_CADD/05_Official/Dgn_PHASE 1/Sheets/B&N/TT0372_SS_Typical_00A.dgn 10:56:42 AM5/8/2026

F.H.W.A. REGION	STATE	PROJECT NO.	SHEET NO.	TOTAL SHEETS	RECORD DRAWING
9	AZ	TT0372	10	224	

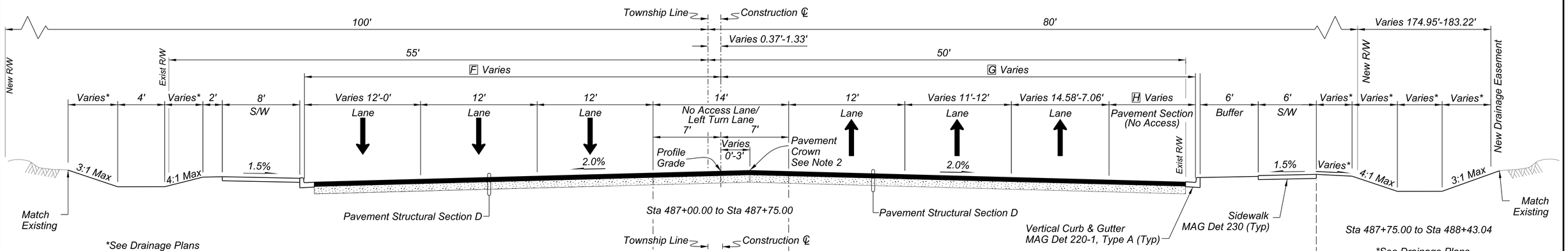

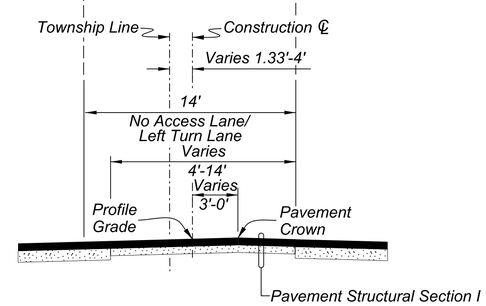

Sta 487+75.00 to Sta 488+89.12

NOTES:
1. Roadway width indicates width to Gutter Flow Line (GFL).

2. See crown and cross slope detail sheets RD05-RD06 for finished grade staking information.

3. Attached sidewalk (S/W) Lt ends at Sta 489+02.55

F - 43', Sta 487+00.00 to Sta 487+25.06
43' to 31', Sta 487+25.06 to Sta 488+75.00
31', Sta 488+75.00 to Sta 488+89.12

G - 47.51' to 54', Sta 487+00.00 to Sta 488+25.00
54', Sta 488+25.00 to Sta 488+89.12

H - 2.92' to 15.93', Sta 487+00.00 to Sta 488+89.12

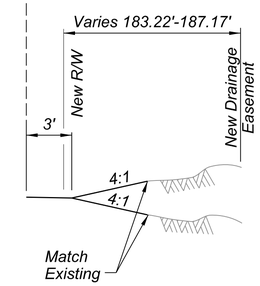

Sta 488+43.04 to Sta 488+89.12

NORTHERN PARKWAY
NTS

Sta 487+00.00 to Sta 488+89.12

NO.	REVISION	BY	DATE
4			
3			
2			
1			

MARICOPA COUNTY

NORTHERN PARKWAY
103RD AVENUE TO 91ST AVENUE - PHASE 1
PROJECT NO. TT0372

	BY	DATE
DESIGNED	G. MCCAIG	05/2026
DRAWN	C. STARK	05/2026
CHECKED	D. LENZER	05/2026

Registered Professional Engineer (Civil) CERTIFICATE NO. 79706 JAMES G. MCCAIG Date of Expiration 06/30/2027

BURGESS & NIPLE
1230 W. WASHINGTON ST. SUITE 511
TEMPE, AZ 85288

Contact Arizona 811 Two Working Days Before You Dig
ARIZONA811 BLUE STAKE, INC.
Call 811 or Click Arizona811.com

TYPICAL SECTION

SHEET TY02

TRACS NO.

pw://tyli-pw.bentley.com:tyli-pw-01/Documents/Projects/221991.00_TT0372/600_CADD/05_Official/Dgn_PHASE 1/Sheets/B&N/TT0372_SS_Typical_008.dgn

10:57:08 AM5/8/2026

F.H.W.A. REGION	STATE	PROJECT NO.	SHEET NO.	TOTAL SHEETS	RECORD DRAWING
9	AZ	TT0372	11	224	

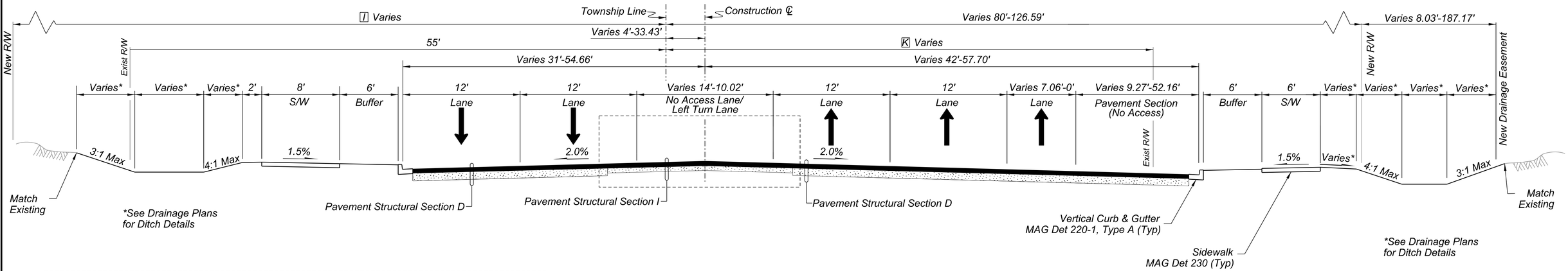

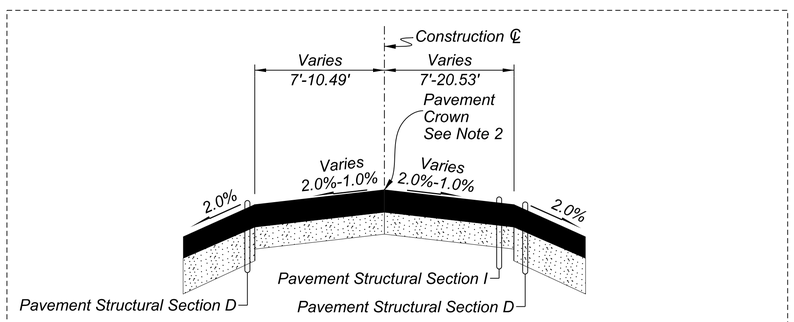

Pavement Crown Detail
Sta 488+89.12 to Sta 496+50.00

NORTHERN PARKWAY
NTS

Sta 488+89.12 to Sta 496+50.00

J - *100', Sta 488+89.12 to Sta 493+01.33*
125', Sta 493+00.57 to Sta 496+50.00

K - *50', Sta 488+89.12 to Sta 489+19.28*
55', Sta 489+19.28 to Sta 496+50.00

NOTES:
1. Roadway width indicates width to Gutter Flow Line (GFL).

2. See crown and cross slope detail sheets RD06-RD07 for finished grade staking information.

3. Detached sidewalk (S/W) Lt begins at Sta 489+12.84.

NO.	REVISION	BY	DATE
3			
2			
1			

MARICOPA COUNTY

NORTHERN PARKWAY
103RD AVENUE TO 91ST AVENUE - PHASE 1
PROJECT NO. TT0372

	BY	DATE
DESIGNED	G. MCCAIG	05/2026
DRAWN	C. STARK	05/2026
CHECKED	D. LENZER	05/2026

Registered Professional Engineer (Civil) CERTIFICATE NO. 79706 JAMES G. MCCAIG Date signed 05/08/2026

BURGESS & NIPLE
1230 W. WASHINGTON ST. SUITE 511
TEMPE, AZ 85288

Contact Arizona 811 Two Working Days Before You Dig
ARIZONA811 BLUE STAKE, INC.
Call 811 or Click Arizona811.com

TYPICAL SECTION

SHEET TY03

TRACS NO.

pw://tyli-pw.bentley.com:tyli-pw-01/Documents/Projects/221991.00_TT0372/600_CADD/05_Official/Dgn_PHASE 1/Sheets/B&N/TT0372_S5_Typical_00C.dgn
10:57:30 AM5/8/2026

F.H.W.A. REGION	STATE	PROJECT NO.	SHEET NO.	TOTAL SHEETS	RECORD DRAWING
9	AZ	TT0372	12	224	

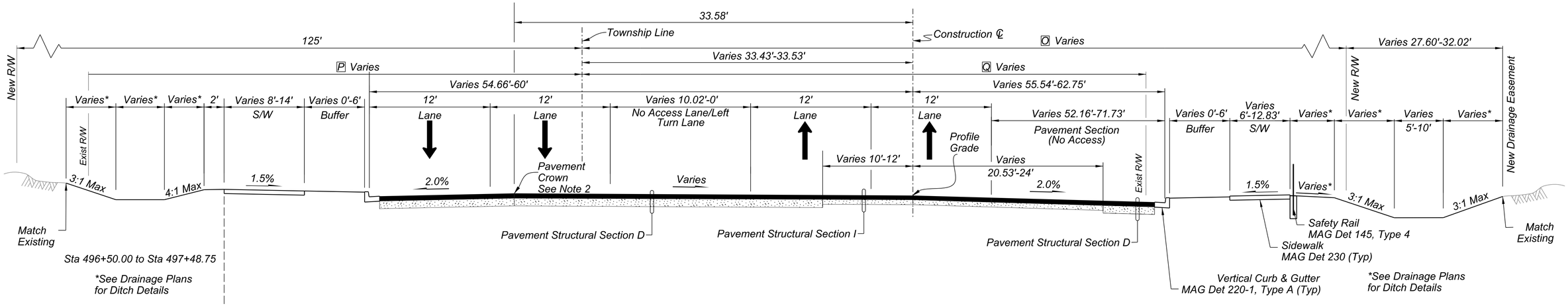

Sta 496+50.00 to Sta 497+48.75

*See Drainage Plans for Ditch Details

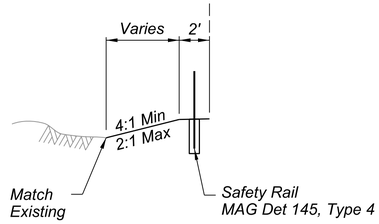

Sta 497+48.75 to Sta 499+81.00

Begin Safety Rail Sta 498+99.98
End Safety Rail Sta 499+81.00

NORTHERN PARKWAY
NTS

Sta 496+50.00 to Sta 499+81.00

Q - 110.10', Sta 496+50.00 to Sta 497+73.56
110.10' to 111.36', Sta 497+73.56 to Sta 498+47.61
111.36', Sta 498+47.61 to Sta 499+48.28

P - 55', Sta 496+50.00 to Sta 496+79.32
55' to 100', Sta 496+79.32 to Sta 498+81.38
40.11', Sta 498+81.38 to Sta 499+81.00

Q - 55', Sta 496+50.00 to Sta 497+28.81
55' to 100.14', Sta 497+28.81 to Sta 499+48.50

NOTES:
1. Roadway width indicates width to Gutter Flow Line (GFL).

2. See crown and cross slope detail sheets RD07-RD08 for finished grade staking information.

Contact Arizona 811 Two Working Days Before You Dig
ARIZONA811 BLUE STAKE, INC.
Call 811 or Click Arizona811.com

NO.	REVISION	BY	DATE
3			
2			
1			

MARICOPA COUNTY

NORTHERN PARKWAY
103RD AVENUE TO 91ST AVENUE - PHASE 1
PROJECT NO. TT0372

Registered Professional Engineer (Civil) CERTIFICATE NO. 79706 JAMES G. MCCAIG Date in 05/08/26

	BY	DATE
DESIGNED	G. MCCAIG	05/2026
DRAWN	C. STARK	05/2026
CHECKED	D. LENZER	05/2026

BURGESS & NIPLE
1230 W. WASHINGTON ST. SUITE 511
TEMPE, AZ 85288

TYPICAL SECTION

SHEET TY04

TRACS NO.

pw://tyli-pw.bentley.com:tyli-pw-01/Documents/Projects/221991.00_TT0372/600_CADD/05_Official/Dgn_PHASE 1/Sheets/B&N/TT0372_SS_Typical_00D.dgn
10:57:57 AM5/8/2026

F.H.W.A. REGION	STATE	PROJECT NO.	SHEET NO.	TOTAL SHEETS	RECORD DRAWING
9	AZ	TT0372	13	224	

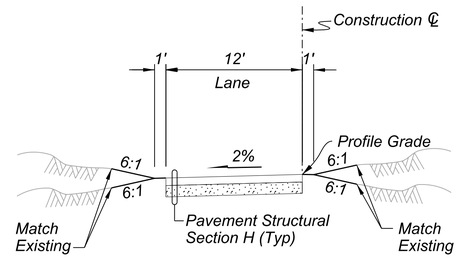

NEW RIVER TRAIL

(Not To Scale)

Sta 10+10.00 to Sta 14+80.64

Contact Arizona 811 Two Working Days Before You Dig

Call 811 or Click Arizona811.com

NO.	REVISION	BY	DATE
3			
2			
1			

MARICOPA COUNTY

NORTHERN PARKWAY
103RD AVENUE TO 91ST AVENUE - PHASE 1
PROJECT NO. TT0372

	BY	DATE
DESIGNED	B. POE	05/2026
DRAWN	C. BURDETT	05/2026
CHECKED	J. BARR	05/2026

BRENAN POE
Registered Professional Engineer
ARIZONA, U.S.A.

TYLin

TYPICAL SECTION

SHEET TY05

TRACS NO.

pw://tyl-pw.bentley.com:tyli-pw-01/Documents/Projects/221991.00_TT0372/600_CADD/05_Official/Dgn_PHASE 1/Sheets/TT0372_SS_Typical_01.dgn $USER$ 10:29:51 AM 5/7/2026 $PENTBLS$ $PLTDRVS$ $NAME$

F.H.W.A. REGION	STATE	PROJECT NO.	SHEET NO.	TOTAL SHEETS	RECORD DRAWING
9	AZ	TT0372	14	224	

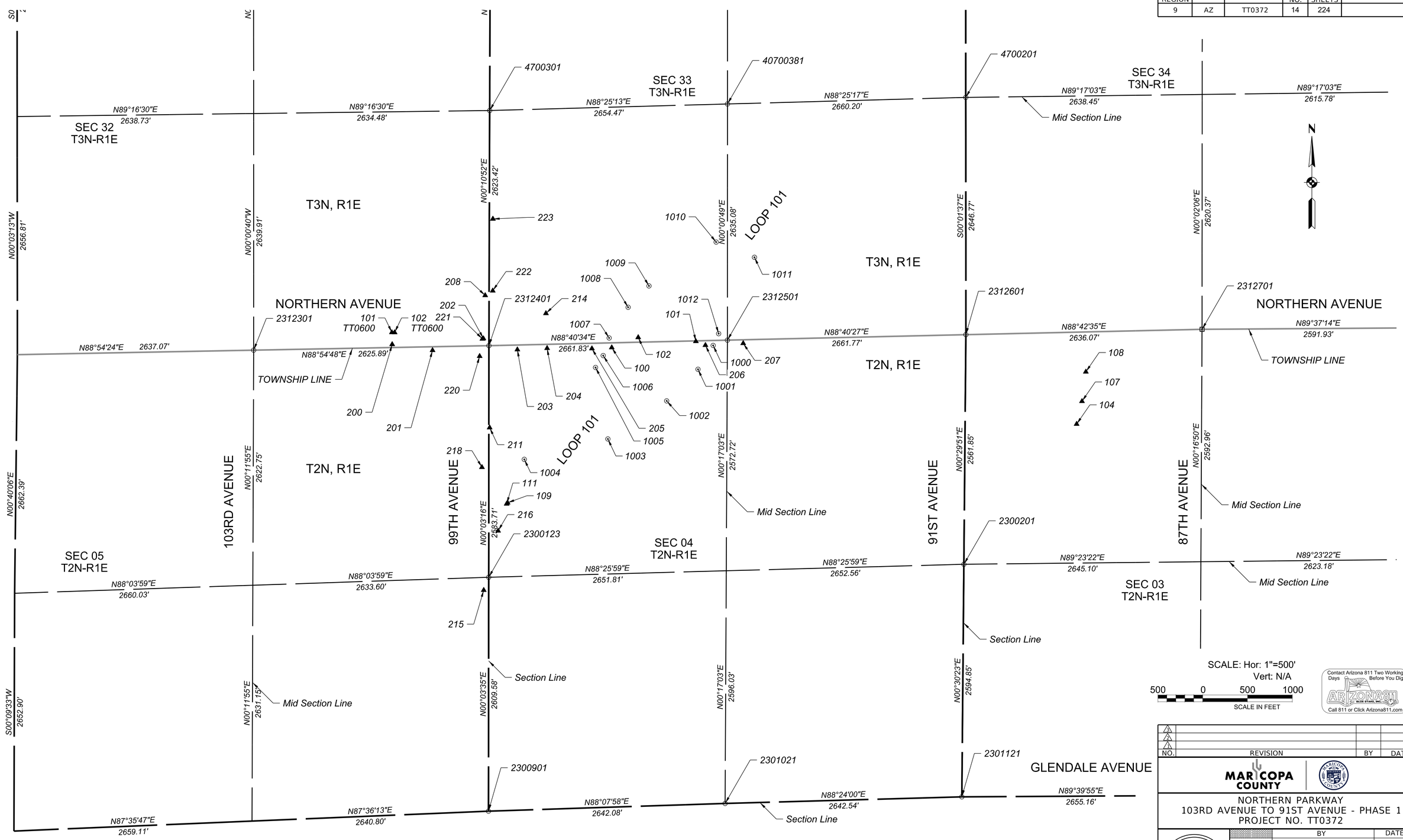

SCALE: Hor: 1"=500'
Vert: N/A

500 0 500 1000
SCALE IN FEET

Contact Arizona 811 Two Working Days Before You Dig
ARIZONA811 BLUE STAKE, INC.
Call 811 or Click Arizona811.com

NO.	REVISION	BY	DATE
3			
2			
1			

MARICOPA COUNTY

NORTHERN PARKWAY
103RD AVENUE TO 91ST AVENUE - PHASE 1
PROJECT NO. TT0372

	BY	DATE
DESIGNED	B. POE	05/2026
DRAWN	C. BURDETT	05/2026
CHECKED	J. BARR	05/2026

BRENAN POE
Date Signed
ARIZONA, U.S.A.

TYLin

GEOMETRIC CONTROL

SHEET GC01

TRACS NO.

NOTE: See Sheets GC 03, GC04, GC 05 for geometry plan information

$PLTDRVS$ $PENTBLS$ 10:30:03 AM 5/7/2026 $USER$ $JOBNAME$
pw://tylin-pw.bentley.com:tylin-pw-01/Documents/Projects/221991.00_TT0372/600_CADD/05_Official/Dgn_PHASE 1/Sheets/TT0372_SC_GeoControl_GC01.dgn

F.H.W.A. REGION	STATE	PROJECT NO.	SHEET NO.	TOTAL SHEETS	RECORD DRAWING
9	AZ	TT0372	15	224	

PROJECT MONUMENTS

COORDINATE LIST

	POINT	NORTHING	EASTING	ELEVATION	CODE
*	100_ADJ	928451.43	593068.07	1085.95	MCXS
*	101_ADJ	928520.49	594006.81	1089.59	MCXS
	102_ADJ	928564.38	593363.19	1086.89	MNS
*	104_ADJ	927597.70	598255.45	1095.48	MACS
*	107_ADJ	927852.27	598315.03	1095.88	MACS
*	108_ADJ	928180.91	598358.09	1095.60	MPKS
*	109_ADJ	926719.25	591905.15	1086.15	MACS
	111_ADJ	926707.64	591895.05	1086.12	MNWS
*	131	928453.09	589259.38	1085.17	MCXS
*	132	928458.49	589559.22	1082.31	MCXS
*	133	928464.10	589858.94	1081.68	MCXS
*	134	928469.97	590158.98	1081.38	MCXS
*	135	928488.10	590458.20	1083.44	MCXS
*	136	928348.46	592107.69	1080.04	MACS
*	137	928443.20	593630.06	1087.06	MACS
*	138	928586.99	593342.25	1086.62	MACS
*	139	928566.36	593735.23	1087.98	MPKS
*	140	928460.34	593218.28	1086.25	MPKS
*	141	927893.66	592604.75	1080.83	MPKS
*	142	928026.81	592543.89	1080.88	MPKS
*	143	928357.98	592587.02	1081.38	MACS
*	144	928326.78	591778.16	1080.40	MACS
*	145	928124.06	591690.30	1079.14	MPKS
*	146	928634.29	594746.45	1091.29	MACS
*	147	928412.28	594130.22	1086.54	MACS
*	148	928646.07	595271.45	1091.86	MACS
*	149	928667.03	595832.10	1094.96	MACS
*	200_ADJ	928486.97	590617.77	1085.80	MRS
*	201_ADJ	928420.71	591067.95	1084.87	MRS
*	202_ADJ	928552.38	591635.89	1081.02	MRS
*	203_ADJ	928428.17	592014.81	1080.80	MRS
*	204_ADJ	928443.57	592346.61	1081.89	MRS
*	205_ADJ	928440.60	592846.52	1084.54	MRS
*	206_ADJ	928477.94	594113.39	1089.19	MRS
*	207_ADJ	928498.38	594534.99	1090.67	MRS
*	208_ADJ	929033.07	591655.55	1080.27	MRS
*	211_ADJ	927557.97	591705.32	1077.04	MRS
*	214_ADJ	928832.72	592333.54	1082.93	MRS
*	215_ADJ	925744.50	591639.26	1074.26	MACS
*	216_ADJ	926406.92	591799.62	1081.39	MACS
*	218_ADJ	927116.02	591619.22	1077.28	MPKS
*	220_ADJ	928354.63	591593.64	1085.58	MACS
*	221_ADJ	928548.28	591624.67	1081.35	MACS
*	222_ADJ	929084.77	591739.58	1080.95	MNS
*	223_ADJ	929886.27	591741.65	1084.59	MBSS
*	553_2015	927626.29	586380.77	1090.90	MBCS
	1000	928475.19	594199.27	1089.48	MACF
	1001	928208.86	594030.06	1086.92	MACF
	1002	927856.54	593680.70	1084.68	MACF
	1003	927431.82	593024.53	1082.93	MACF
	1004	927203.72	592091.85	1077.98	MACF
	1005	928229.22	592887.00	1082.86	MACF
	1006	928362.18	592972.49	1084.63	MACF
	1007	928558.45	593038.88	1086.26	MACF
	1008	928900.66	593250.68	1086.96	MACF
	1009	929138.93	593483.23	1087.99	MACF
	1010	929627.99	594232.82	1091.78	MACF
	1011	929458.37	594660.37	1093.05	MMF
	1012	928606.52	594260.89	1089.36	MACF
	1165	926427.45	587132.78	1082.21	MBCF
	1174	927038.98	587584.61	1084.32	MBCF
	1175	927050.35	587624.60	1084.93	MBCF
	1176	927291.87	588587.44	1083.13	MBCF
	68004	925717.14	587124.56	0.00	CALC
	68005	926427.42	587132.78	0.00	CALC
	68007	927050.34	587624.57	0.00	CALC
	68008	927302.50	588629.80	0.00	CALC
*	151233	928283.56	586863.86	1092.10	MACS
*	151243	928477.56	589881.80	1080.74	MACS
*	151244	928467.21	589479.44	1082.70	MACS
*	151245	928457.12	589111.41	1087.68	MCXS
*	151246	928307.33	589065.61	1088.21	MACS
*	151248	928357.97	588020.88	1093.48	MACS
*	151249	928639.86	588000.78	1093.75	MCXS
*	151250	928338.38	586980.29	1095.51	MACS
*	151251	928339.72	586838.55	1094.74	MACS
	339044	931307.89	602272.08	1112.83	MBCFHH
	504847	928372.26	586435.31	0.00	MBCFHH
	2300001	925710.05	586404.26	1088.43	MBCF
*	2300123	925888.67	591694.86	1074.62	MACS
	2300201	926033.72	596997.26	1087.94	MBCF
	2300301	926089.87	602265.24	1108.80	MBCFHH
	2300701	923057.16	586396.88	1076.09	MBCF
	2300801	923168.68	589053.65	1066.37	MBCF
	2300901	923279.10	591692.14	1068.79	MBCF
	2301021	923365.19	594332.81	1070.04	MACS
	2301121	923438.97	596974.32	1080.42	MACS
	2301201	923454.48	599629.44	1091.43	MBCFHH
	2301301	923470.35	602284.06	1097.29	MBCF
*	2312301	928422.57	589071.90	1087.98	MBCF
*	2312401	928472.38	591697.32	1078.76	MBCFHH
*	2312501	928533.88	594358.45	1089.51	MBCF
*	2312602	928588.90	597019.63	1097.45	MBCF
*	2312701	928654.83	599654.91	1098.63	MBCFHH
-	2312801	928672.40	602262.16	1104.28	MBCF
*	2312802	928672.00	602246.78	1103.46	MBCFHH
-	2312803	928657.95	602246.87	1104.29	MBCF
-	2312804	928658.35	602262.23	1104.31	MBCF
	4700201	931242.24	597018.26	1104.17	MBCF
	4700281	931240.54	597016.66	1104.67	MPKF
	4700282	931244.12	597016.51	1104.55	MPKF
	4700283	931243.79	597019.74	1104.57	MPKF
	4700284	931240.54	597019.82	1104.64	MPKF
	4700301	931095.78	591705.61	1088.93	MBCF
	4700381	931168.96	594359.07	1095.50	MBCF
	4700401	931029.07	586432.83	1105.08	MBCFHH
	4700601	933684.58	586430.93	1111.57	MBCF
	4700701	933703.05	589070.83	1094.84	MBCF
	4700801	933718.91	591713.98	1094.89	MBCF
	4700901	933809.18	594359.43	1102.80	MBCF
	4701001	933888.68	597016.91	1111.80	MBCF
	4701101	933916.79	599658.12	1118.92	MBCFHH
	4701201	933942.63	602297.04	1124.81	MBCFHH
*101_TT600_ADJ		928620.14	590614.36	1082.53	MRS
*102_TT600_ADJ		928619.84	590644.88	1079.63	MPKS
1004_TT600		927865.03	589070.09	1081.98	MBCF
+1005_TT600		925718.33	587124.57	1081.02	MBCF

* = MAY BE USED FOR BENCHMARK
\+ = TO BE REPLACED OR PROTECTED IF AFFECTED BY CONSTRUCTION
\- = DO NOT REPLACE OR PROTECT IF AFFECTED BY CONSTRUCTION

Note that 6xxx - 8xxx "CALC" points not annotated are "office calc points"

Code	Description
CALC	CALCULATED POINT
CONTROL	CONTROL MONUMENT
MACF	ALUMINUM CAP FOUND
MACS	ALUMINUM CAP SET
MBCF	BRASS CAP FOUND
MBCFHH	BRASS CAP FOUND IN HAND HOLE
MBCS	BRASS CAP SET
MBSS	BRIDGE SPIKE SET
MCXS	CHISELED X SET
MMF	MISC SURVEY MON FOUND
MNS	NAIL SET
MNWS	NAIL + WHISKER SET
MPKF	PK NAIL FOUND
MPKS	PK NAIL SET
MRS	REBAR SET

SECTION CORNER NOTES

The coordinate values for the section corners and quarter corners (listed in the coordinate list on the left side of this file) may vary slightly from those in the MCDOT Land Survey Point Database due to regular measurement variation in land surveying. The differences are well within measurement tolerance.

MARICOPA COUNTY DEPARTMENT OF TRANSPORTATION SURVEY BRANCH

Survey Project#: TT0372
Project: Northern Parkway - 103rd Ave to 91st Ave
author: erik.hornaday
date created: 12/19/2025 10:20:18 AM
last changed by: erik.hornaday
date changed: 3/9/2026 2:45:02 PM
CAD version: OpenRoads Designer v10.12.02.4
DGN name: TT0372_BC_GeoControl.dgn
Field Survey date: 2025-11-05 R. Doetsch 3308
Field Survey date:
Field Survey date:

COORDINATE SYSTEM METADATA

Linear Units: **International Feet**

Ground Scale Factor: **0.99984003 (from TT0195)**

Horizontal Coordinate System / Datum:
Datum: North American Datum of 1983(NAD83) [1992 epoch]

Projection: This project is in a GROUND coordinate system however it is based on the Arizona Coordinate System, 1983 Central Zone, otherwise known as the Arizona State Plane Central Zone (ASPCZ) or "Grid."

In order to obtain ASPCZ coordinates;
- Scale (multiply) both the northings (Y component) and eastings (X component) value by the scale factor shown above.

Distances displayed are horizontal and are not slope.

Vertical Datum:
Vertical Datum: NAVD88 (North American Vertical Datum of 1988)
Geodetic Datum: NAD83 adjustment 1992
Geoid: Geoid 2003

PRIMARY CONTROL

GPS NAME:	553_2015
NGS PID:	N/A
LATITUDE:	N33°32'56.34096000"
LONGITUDE:	W112°17'23.673289"
ELLIPSOID HEIGHT:	991.6950'
GRID NORTHING:	927,477.890'
GRID EASTING:	586,286.965'
GROUND NORTHING:	927,626.286'
GROUND EASTING:	586,380.771'
ELEVATION (NAVD88 GDACS):	1090.896'

SURVEYOR'S NOTES

The original mapping and control for project TT0372 was performed in a MCDOT calibrated site. It was decided in 2018 to transform the coordinates for TT0372 to the TT0195 Northern Ave Pkwy: Sarival to Dysart PHASE 1 coordinate system. This put project TT0372 on the same coordinate system as adjacent Northern Parkway projects TT0573 and TT0600.

The original scope of this project was Northern Ave from 99th Ave to 93rd Ave. This corridor was mapped on the ground, using conventional methods. During the early design phase of TT0372, a scoping project was performed under the name TT0573 Northern Parkway - Loop 101 to Grand Ave. TT0573 was mapped via photogrammetry, with supplemental mapping performed conventionally in certain areas. When the scope of TT0372 was expanded to it's current state of 99th Avenue to 87th Avenue, the portions that were not mapped originally were filled in with mapping obtained by photogrammetry during the TT0573 project.

Original control set during TT0372 mapping is not sufficient to cover the current project area. In an effort to densify the project control, points set during the supplemental mapping phase of the TT0573 project have been added to this BC file (TT372_BC_Northern Parkway - 99th Ave to 87th Ave_v4.dgn). In order to tie the TT0372 and TT0573 projects together vertically, level circuits were ran through all the control in the project area. This has resulted in elevation adjustments ranging from 0.01'-0.07'. Adjusted points were renamed with the _ADJ suffix.

The scope of this drawing was reduced to eliminate information not relevant to the TT0372 project. All section lines, section corners, survey monuments and survey control east of 83rd Avenue were eliminated. The data eliminated can be found in the previous version of this file named TT573_BC_Northern Parkway - Loop 101 to Grand Ave_v2.dgn

The horizontal position of all control points in this drawing were established from MCDOT Primary Control Point 553_2015

ADDITIONAL SURVEYOR'S NOTES

This dgn is a combination of data:
From TT372 Northern Parkway - 99th Ave to 93rd Ave as collected by MCDOT & Wood Patel
AND
From TT600 Northern Parkway - Agua Fria to 99th Ave as collected by EPS Group and MCDOT.

Contact Arizona 811 Two Working Days Before You Dig
Call 811 or Click Arizona811.com

NO.	REVISION	BY	DATE
3			
2			
1			

MARICOPA COUNTY

NORTHERN PARKWAY
103RD AVENUE TO 91ST AVENUE - PHASE 1
PROJECT NO. TT0372

	BY	DATE
DESIGNED	B. POE	05/2026
DRAWN	C. BURDETT	05/2026
CHECKED	J. BARR	05/2026

BRENAN POE
REGISTERED PROFESSIONAL ENGINEER (CIVIL)
CERTIFICATE NO. 58893
Date Signed
ARIZONA, U.S.A.

TYLin

GEOMETRIC CONTROL

SHEET GC02

TRACS NO.

pw://tyli-pw.bentley.com:tyli-pw-01/Documents/Projects/221991.00_TT0372/600_CADD/05_Official/Dgn_PHASE 1/Sheets/TT0372_SC_GeoControl.dgn
$USER$ 10:30:17 AM 5/7/2026 $PENTBLS$ $PLTDRVS$

F.H.W.A. REGION	STATE	PROJECT NO.	SHEET NO.	TOTAL SHEETS	RECORD DRAWING
9	AZ	TT0372	16	224	

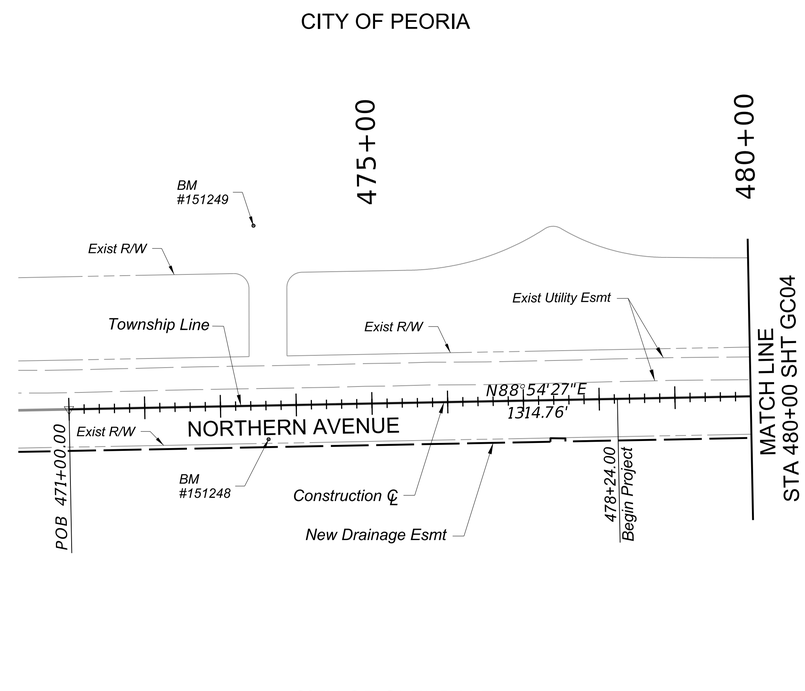

ALIGNMENT CONTROL POINTS

Point Type	*Station*	*Northing*	*Easting*	*Alignment*
POB	*471+00.00*	*928397.47*	*587757.33*	*Northern Avenue*

SCALE: Hor: 1"=100'
Vert: N/A

100 0 100 200
SCALE IN FEET

Contact Arizona 811 Two Working Days Before You Dig
ARIZONA811 BLUE STAKE, INC.
Call 811 or Click Arizona811.com

NO.	REVISION	BY	DATE
3			
2			
1			

MARICOPA COUNTY

NORTHERN PARKWAY
103RD AVENUE TO 91ST AVENUE - PHASE 1
PROJECT NO. TT0372

	BY	DATE
DESIGNED	G. MCCAIG	05/2026
DRAWN	C. STARK	05/2026
CHECKED	D. LENZER	05/2026

Registered Professional Engineer (Civil) CERTIFICATE NO. 79706 JAMES G. MCCAIG Date signed 05/08/26

BURGESS & NIPLE
1230 W. WASHINGTON ST. SUITE 511
TEMPE, AZ 85288

GEOMETRIC CONTROL
NORTHERN AVENUE AND 103RD AVENUE

SHEET GC03

TRACS NO.

pw://tyli-pw.bentley.com:tyli-pw-01/Documents/Projects/221991.00_TT0372/600_CADD/05_Official/Dgn_PHASE 1/Sheets/B&N/TT0372_SC_GeoControl_02a.dgn 10:58:21 AM5/8/2026

F.H.W.A. REGION	STATE	PROJECT NO.	SHEET NO.	TOTAL SHEETS	RECORD DRAWING
9	AZ	TT0372	17	224	

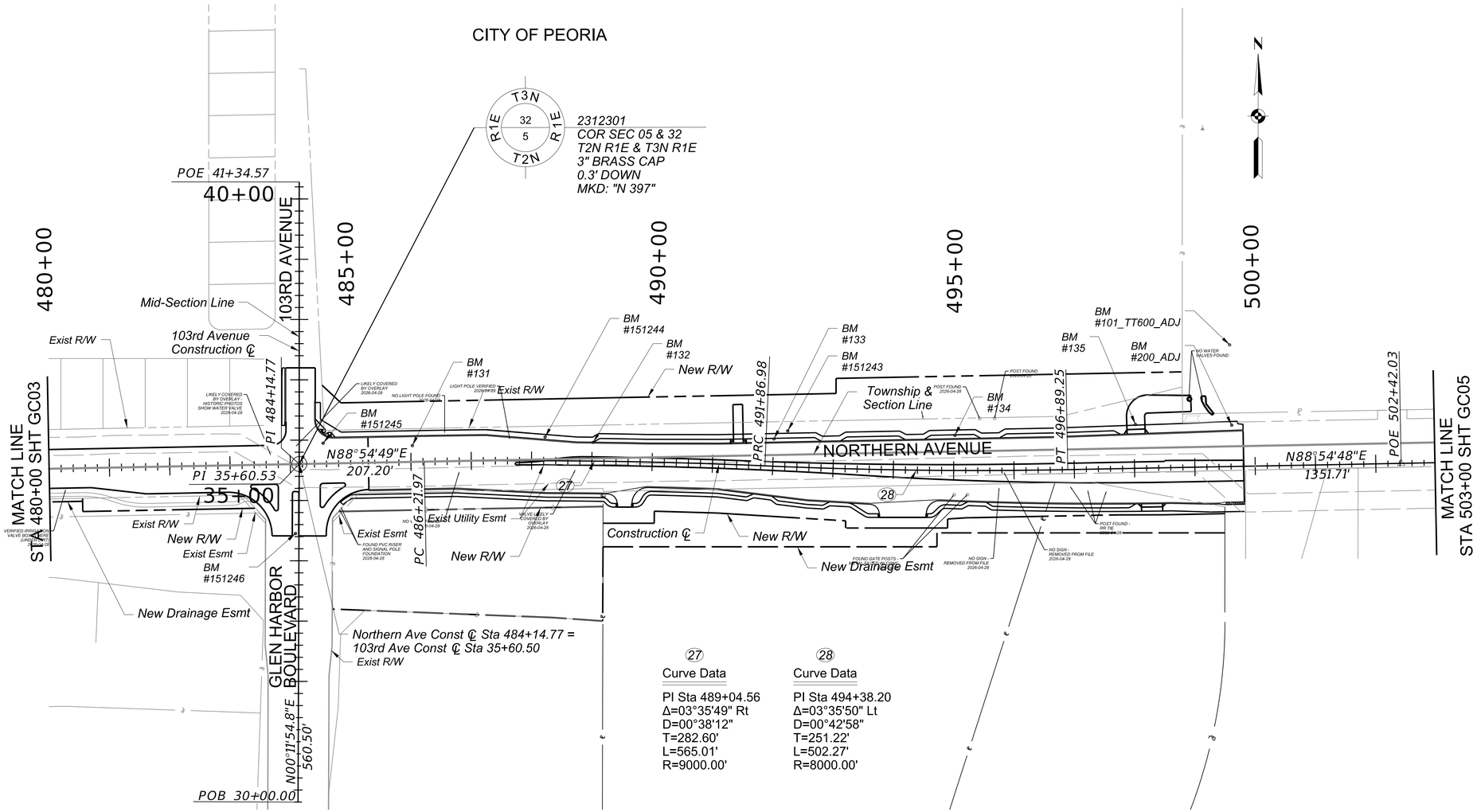

27

Curve Data

PI Sta 489+04.56
Δ=03°35'49" Rt
D=00°38'12"
T=282.60'
L=565.01'
R=9000.00'

28

Curve Data

PI Sta 494+38.20
Δ=03°35'50" Lt
D=00°42'58"
T=251.22'
L=502.27'
R=8000.00'

CITY OF GLENDALE

ALIGNMENT CONTROL POINTS

Point Type	Station	Northing	Easting	Alignment
PI	484+14.77	928422.54	589071.86	Northern Avenue
PC	486+21.97	928426.47	589279.02	Northern Avenue
PRC	491+86.98	928419.45	589843.89	Northern Avenue
PT	496+89.25	928413.21	590346.04	Northern Avenue
POE	502+42.03	928423.70	590898.73	Northern Avenue
POB	30+00.00	927862.04	589069.91	103rd Avenue
PI	35+60.53	928422.54	589071.86	103rd Avenue
POE	41+34.57	928890.25	589071.77	103rd Avenue

SCALE: Hor: 1"=100'
Vert: N/A

100 0 100 200
SCALE IN FEET

Contact Arizona 811 Two Working Days Before You Dig
ARIZONA811 BLUE STAKE, INC.
Call 811 or Click Arizona811.com

NO.	REVISION	BY	DATE
3			
2			
1			

MARICOPA COUNTY

NORTHERN PARKWAY
103RD AVENUE TO 91ST AVENUE - PHASE 1
PROJECT NO. TT0372

	BY	DATE
DESIGNED	G. MCCAIG	05/2026
DRAWN	C. STARK	05/2026
CHECKED	D. LENZER	05/2026

Registered Professional Engineer (Civil) CERTIFICATE NO. 79706 JAMES G. MCCAIG Date in 05/08/26

BURGESS & NIPLE
1230 W. WASHINGTON ST. SUITE 511
TEMPE, AZ 85288

GEOMETRIC CONTROL
NORTHERN AVENUE AND 103RD AVENUE

SHEET GC04

TRACS NO.

pw://tyli-pw.bentley.com:tyli-pw-01/Documents/Projects/221991.00_TT0372/600_CADD/05_Official/Dgn_PHASE 1/Sheets/B&N/TT0372_SC_GeoControl_02b.dgn 10:58:40 AM5/8/2026

F.H.W.A. REGION	STATE	PROJECT NO.	SHEET NO.	TOTAL SHEETS	RECORD DRAWING
9	AZ	TT0372	18	224	

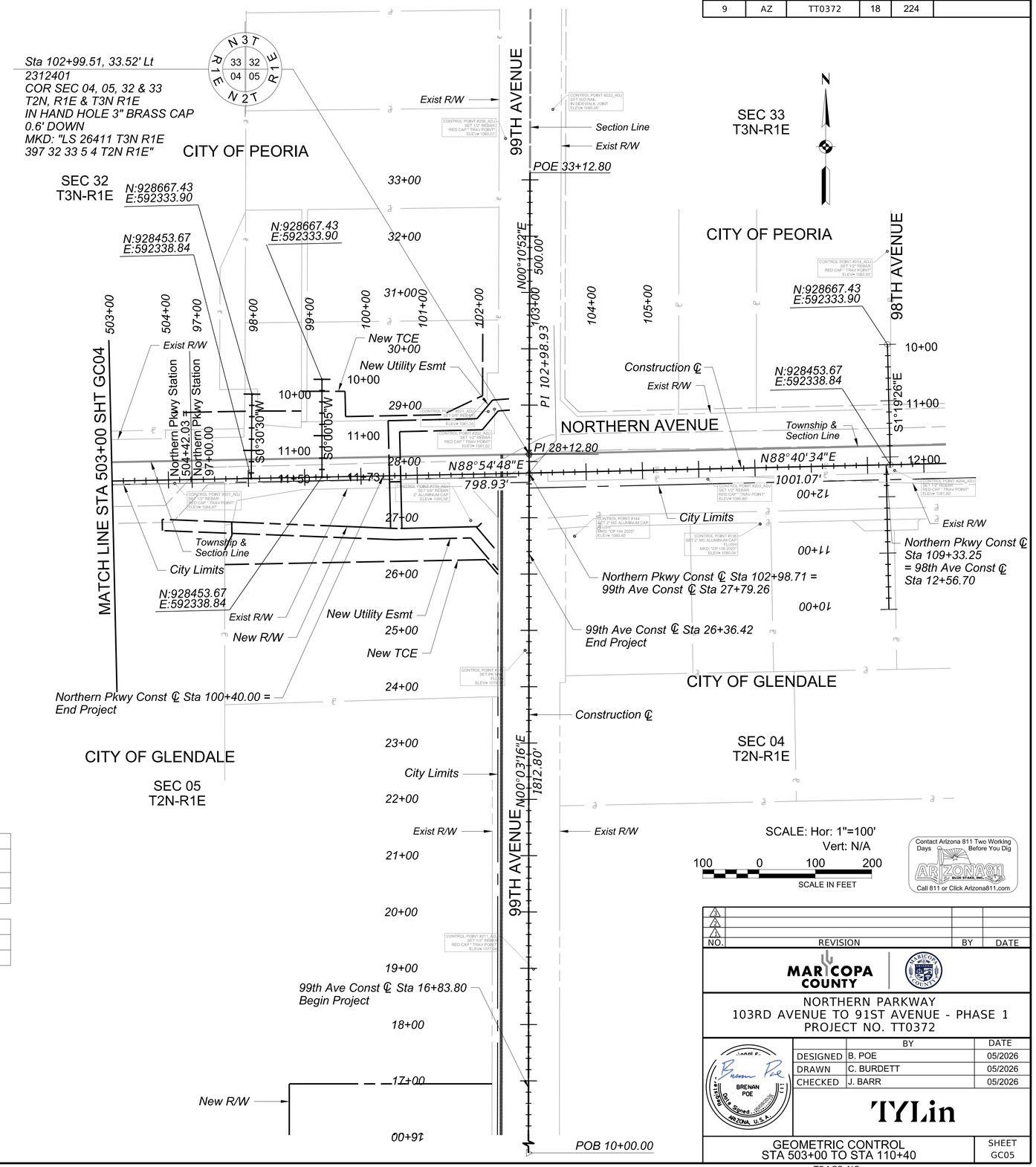

▲ Control Point 201
Red Cap
Sta 96+69.13, 6.19' Rt
El 1084.87'

ALIGNMENT CONTROL POINTS

Point Type	Station	Northing	Easting	Alignment
PI	504+42.03 97+00.00	928427.49	591098.69	Northern Avenue
PI	102+98.93	928438.85	591697.51	Northern Avenue
POE	109+33.25	928453.50	592331.66	Northern Avenue
POB	10+00.00	926659.58	591695.60	99th Avenue
PI	28+12.80	928472.38	591697.32	99th Avenue
POE	33+12.80	928972.37	591698.90	99th Avenue

NO.	REVISION	BY	DATE
3			
2			
1			

MARICOPA COUNTY

NORTHERN PARKWAY
103RD AVENUE TO 91ST AVENUE - PHASE 1
PROJECT NO. TT0372

	BY	DATE
DESIGNED	B. POE	05/2026
DRAWN	C. BURDETT	05/2026
CHECKED	J. BARR	05/2026

BRENNAN POE
ARIZONA, U.S.A.

TYLin

GEOMETRIC CONTROL
STA 503+00 TO STA 110+40

SHEET
GC05

TRACS NO.

$PLTDRVS$ $PENTBLS$ 10:30:36 AM 5/7/2026 $USER$ $DATE$ $TIME$

pw://tylin-pw.bentley.com:tylin-pw-01/Documents/Projects/221991.00_TT0372/600_CADD/05_Official/Dgn_PHASE 1/Sheets/TT0372_SC_GeoControl_GC05.dgn

F.H.W.A. REGION	STATE	PROJECT NO.	SHEET NO.	TOTAL SHEETS	RECORD DRAWING
9	AZ	TT0372	19	224	

ONE-WAY ROADWAY

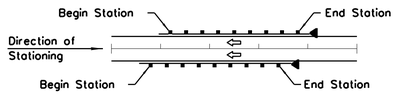

TWO-WAY ROADWAY WITH STRUCTURE ◒

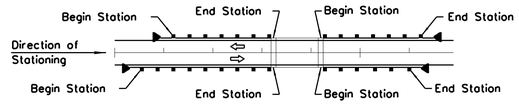

DIVIDED ROADWAY WITH HIGH TENSION MEDIAN CABLE BARRIER

| LOCATION | | BARRIER | | |

F.H.W.A. REGION	STATE	PROJECT NO.	SHEET NO.	TOTAL SHEETS	RECORD DRAWING
9	AZ	TT0372	20	224	

☐ *REMOVAL / RELOCATE* ☐

7 *Remove Asphalt Concrete* 3657 SY

S *Sawcut and Match Existing Roadway*

P *Protect in Place*

◯ *CONSTRUCTION* ◯

2D *Construct Roadway Pavement Section G*

Subgrade Preparation	3657 SY
17" Aggregate Base Course	1727 CY
2" Asphalt Concrete Pavement (Superpave 1/2" Mix, High Traffic)	398 Ton
3" Asphalt Concrete Pavement (Superpave 3/4" Mix, High Traffic)	597 Ton
Tack Coat	1.22 Ton

19 *Adjust Valve Box & Cover, MAG Det 391, Type A* 1 EA

20 *Adjust Manhole to Grade, MAG Det 422* 1 EA

◇ BY OTHERS ◇

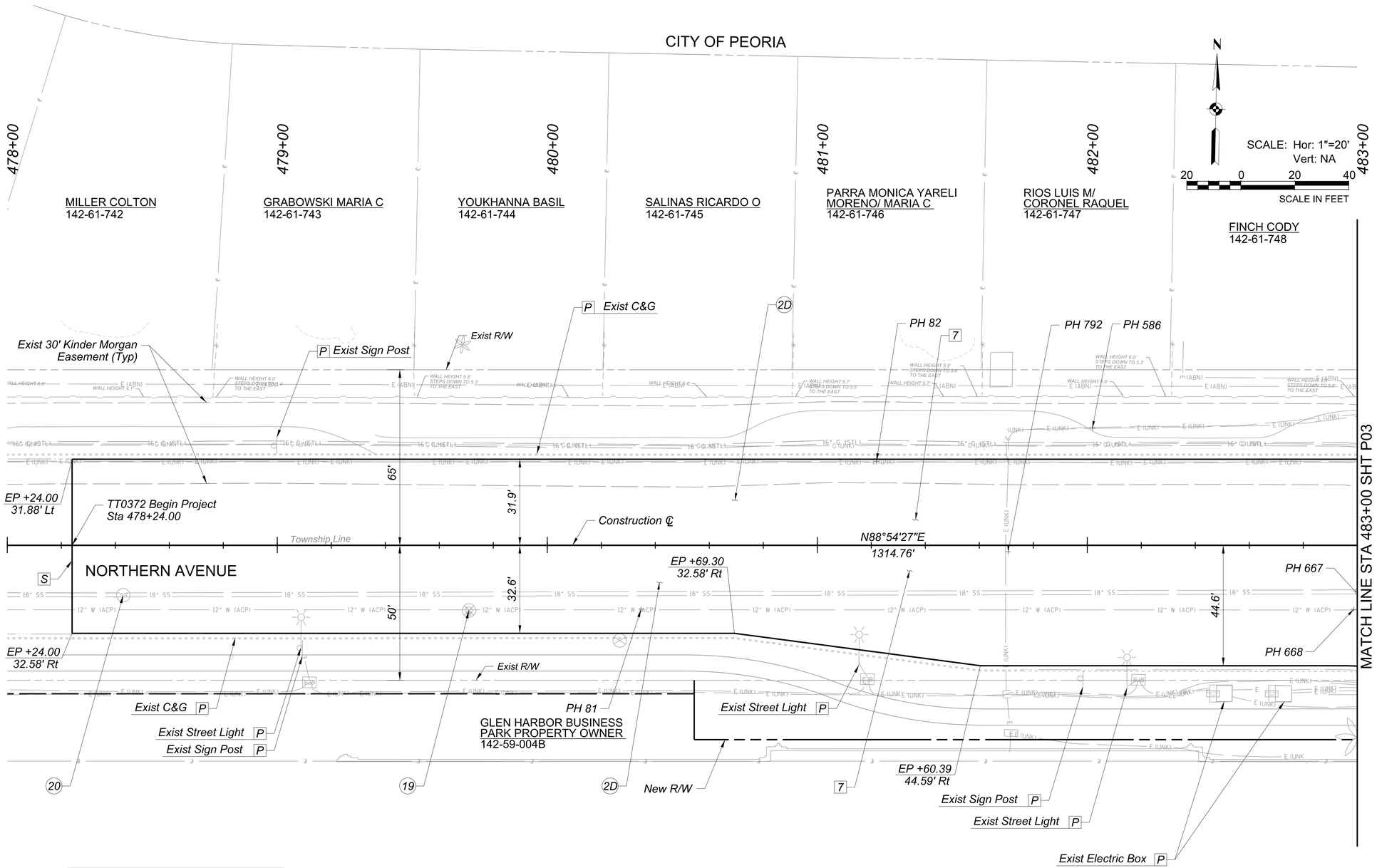

Valve / Manhole Adjustment Table
19 Sta 479+71.01, 24.11' Rt
20 Sta 478+42.93, 18.46' Rt

CITY OF GLENDALE
2007-0639973

CITY OF GLENDALE

Contact Arizona 811 Two Working Days Before You Dig
Call 811 or Click Arizona811.com

NO.	REVISION	BY	DATE
3			
2			
1			

MARICOPA COUNTY

NORTHERN PARKWAY
103RD AVENUE TO 91ST AVENUE - PHASE 1
PROJECT NO. TT0372

	BY	DATE
DESIGNED	G. MCCAIG	05/2026
DRAWN	C. STARK	05/2026
CHECKED	D. LENZER	05/2026

Registered Professional Engineer (Civil) CERTIFICATE NO. 79706 JAMES G. MCCAIG Date Signed 05/08/2026

BURGESS & NIPLE
1230 W. WASHINGTON ST. SUITE 511
TEMPE, AZ 85288

NORTHERN AVENUE PLAN SHEET
STA 478+00 TO 483+00

SHEET P01

TRACS NO.

pw://tyli-pw.bentley.com:tyli-pw-01/Documents/Projects/221991.00_TT0372/600_CADD/05_Official/Dgn_PHASE 1/Sheets/B&N/TT0372_SC_Northern_Plan_00A.dgn 10:59:58 AM5/8/2026

F.H.W.A. REGION	STATE	PROJECT NO.	SHEET NO.	TOTAL SHEETS	RECORD DRAWING
9	AZ	TT0372	21	224	

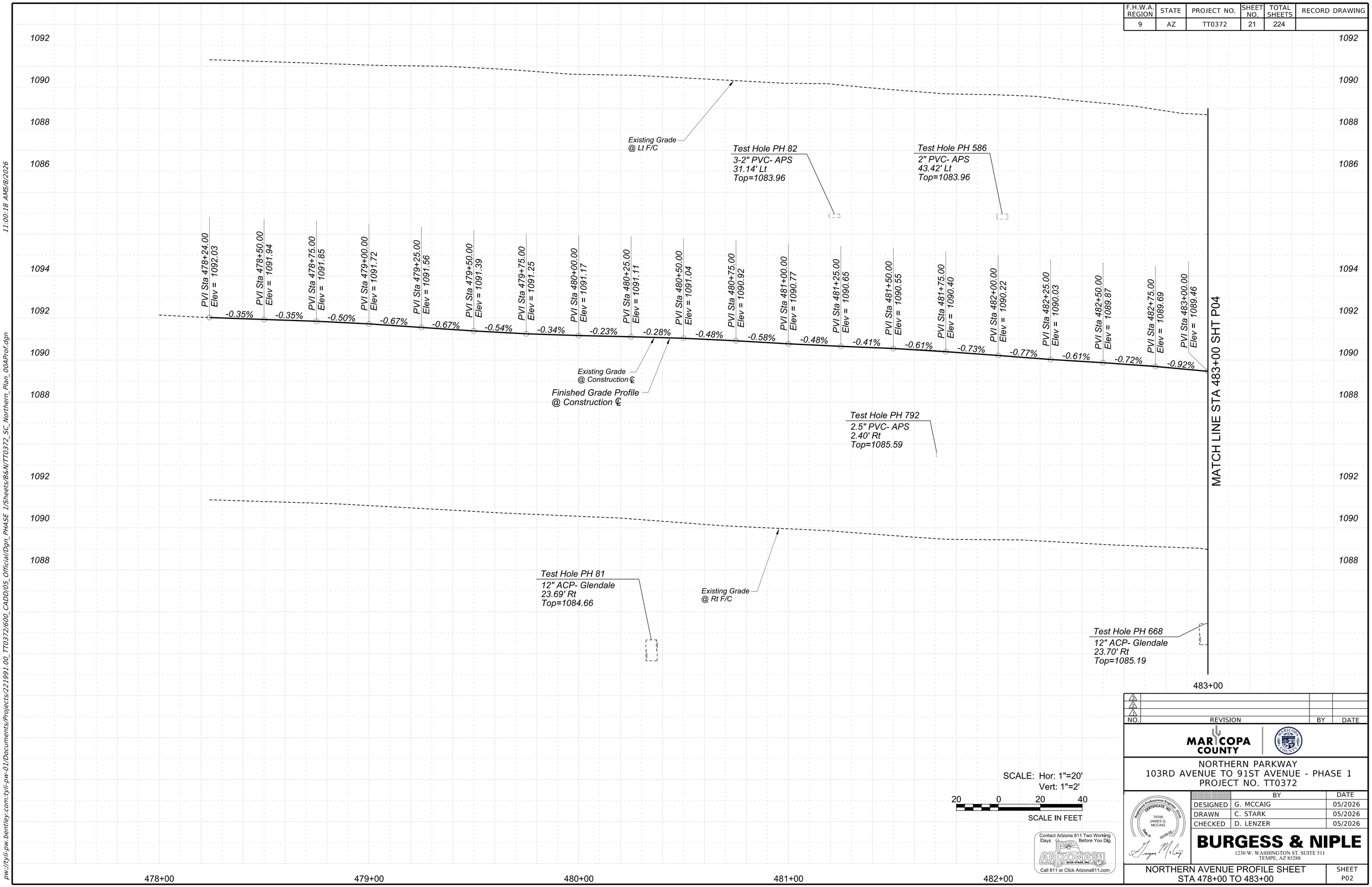

SCALE: Hor: 1"=20'
Vert: 1"=2'

20 0 20 40
SCALE IN FEET

Contact Arizona 811 Two Working Days Before You Dig
ARIZONA811 BLUE STAKE, INC.
Call 811 or Click Arizona811.com

NO.	REVISION	BY	DATE
3			
2			
1			

MARICOPA COUNTY

NORTHERN PARKWAY
103RD AVENUE TO 91ST AVENUE - PHASE 1
PROJECT NO. TT0372

	BY	DATE
DESIGNED	G. MCCAIG	05/2026
DRAWN	C. STARK	05/2026
CHECKED	D. LENZER	05/2026

Registered Professional Engineer (Civil) CERTIFICATE NO. 79706 JAMES G. MCCAIG Date Signed 05/08/26

BURGESS & NIPLE
1230 W. WASHINGTON ST. SUITE 511
TEMPE, AZ 85288

NORTHERN AVENUE PROFILE SHEET
STA 478+00 TO 483+00

SHEET P02

TRACS NO.

pw://tyli-pw.bentley.com:tyli-pw-01/Documents/Projects/221991.00_TT0372/600_CADD/05_Official/Dgn_PHASE 1/Sheets/B&N/TT0372_SC_Northern_Plan_00AProf.dgn 11:00:18 AM5/8/2026

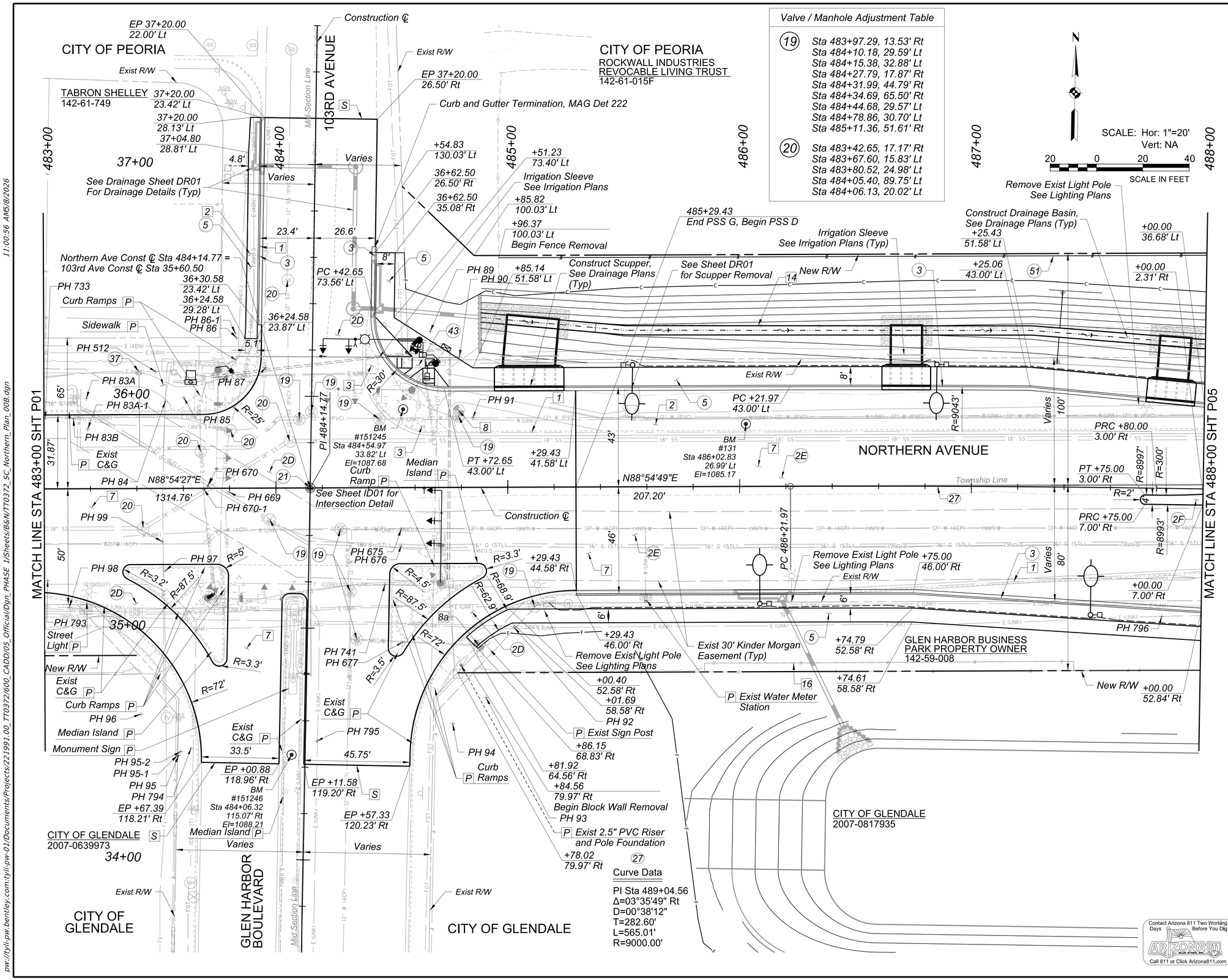

Valve / Manhole Adjustment Table	
19	Sta 483+97.29, 13.53' Rt Sta 484+10.18, 29.59' Lt Sta 484+15.38, 32.88' Lt Sta 484+27.79, 17.87' Rt Sta 484+31.99, 44.79' Rt Sta 484+34.69, 65.50' Rt Sta 484+44.68, 29.57' Lt Sta 484+78.86, 30.70' Lt Sta 485+11.36, 51.61' Rt
20	Sta 483+42.65, 17.17' Rt Sta 483+67.60, 15.83' Lt Sta 483+80.52, 24.98' Lt Sta 484+05.40, 89.75' Lt Sta 484+06.13, 20.02' Lt

F.H.W.A. REGION	STATE	PROJECT NO.	SHEET NO.	TOTAL SHEETS	RECORD DRAWING
9	AZ	TT0372	22	224	

REMOVAL / RELOCATE

1	Remove Existing Concrete Curb/Curb and Gutter	802 LF
2	Remove Existing Concrete Sidewalk	2130 SF
3	Remove Existing Sidewalk Ramp	2 EA
7	Remove Asphalt Concrete	5172 SY
8	Remove Existing Hydrant and Replace, COP Std Det PE-360	1 EA
8a	Remove and Relocate Existing Fire Hydrant, COG Std Det G-660	1 EA
14	Remove Existing Barbed Wire Fence	335 LF
16	Remove Existing Block Wall	327 LF
S	Sawcut and Match Existing Roadway	
P	Protect in Place	

CONSTRUCTION

2D	Construct Roadway Pavement Section G	
	Subgrade Preparation	3450 SY
	17" Aggregate Base Course	1629 CY
	2" Asphalt Concrete Pavement (Superpave 1/2" Mix, High Traffic)	375 Ton
	3" Asphalt Concrete Pavement (Superpave 3/4" Mix, High Traffic)	563 Ton
	Tack Coat	1.15 Ton
2E	Construct Roadway Pavement Section D	
	Subgrade Preparation	2601 SY
	12" Aggregate Base Course	867 CY
	2" Asphalt Concrete Pavement (Superpave 1/2" Mix, High Traffic)	283 Ton
	3" Asphalt Concrete Pavement (Superpave 3/4" Mix, High Traffic)	424 Ton
	Tack Coat	0.87 Ton
2F	Construct Roadway Pavement Section I	
	Subgrade Preparation	13 SY
	4" Aggregate Base Course	1 CY
	2" Asphalt Concrete Pavement (Superpave 1/2" Mix, High Traffic)	1 Ton
	3" Asphalt Concrete Pavement (Superpave 3/4" Mix, High Traffic)	2 Ton
	Tack Coat	0.01 Ton
3	Construct Vertical Curb and Gutter, MAG Det 220-1, Type A	719 LF
5	Construct Sidewalk, MAG Det 230	5578 SF
19	Adjust Valve Box & Cover, MAG Det 391, Type A	9 EA
20	Adjust Manhole to Grade, MAG Det 422	5 EA
21	Install Survey Marker, MAG Det 120, Type A	1 EA
37	New Water Meter and Service Line Tap, COP Std Det PE-363 Sta 483+41.02, 49.85' Lt	1 EA
43	Construct Dual Curb Ramps, MAG Det 237-1, Attached Sidewalk, See Sheet RD01 for Details	1 EA
51	Construct Barbed Wire Fence, Type 1, ADOT C-12.10	306 LF

BY OTHERS

1	Remove and Relocate Electrical Facilities by Others

NO.	REVISION	BY	DATE
3			
2			
1			

MARICOPA COUNTY

NORTHERN PARKWAY
103RD AVENUE TO 91ST AVENUE - PHASE 1
PROJECT NO. TT0372

	BY	DATE
DESIGNED	G. MCCAIG	05/2026
DRAWN	C. STARK	05/2026
CHECKED	D. LENZER	05/2026

Registered Professional Engineer (Civil) CERTIFICATE NO. 79706 JAMES G. MCCAIG Date Signed 05/08/26

BURGESS & NIPLE
1230 W. WASHINGTON ST. SUITE 511
TEMPE, AZ 85288

Contact Arizona 811 Two Working Days Before You Dig
ARIZONA811 BLUE STAKE, INC.
Call 811 or Click Arizona811.com

NORTHERN AVENUE PLAN SHEET
STA 483+00 TO 488+00

SHEET P03

TRACS NO.

pw://tyli-pw.bentley.com:tyli-pw-01/Documents/Projects/221991.00_TT0372/600_CADD/05_Official/Dgn_PHASE 1/Sheets/B&N/TT0372_SC_Northern_Plan_008.dgn 11:00:56 AM5/8/2026

F.H.W.A. REGION	STATE	PROJECT NO.	SHEET NO.	TOTAL SHEETS	RECORD DRAWING
9	AZ	TT0372	23	224	

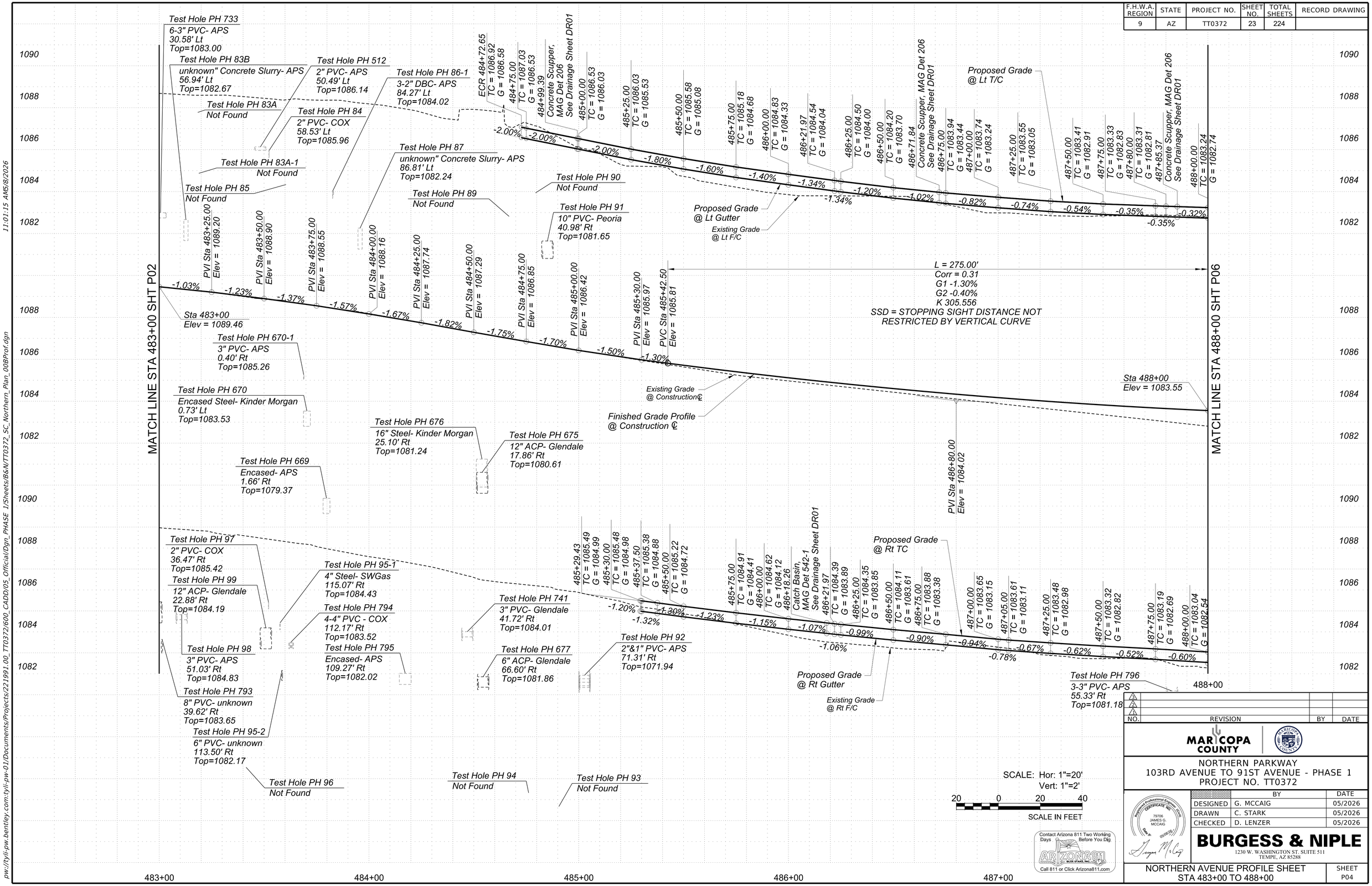

NO.	REVISION	BY	DATE
3			
2			
1			

MARICOPA COUNTY

NORTHERN PARKWAY
103RD AVENUE TO 91ST AVENUE - PHASE 1
PROJECT NO. TT0372

	BY	DATE
DESIGNED	G. MCCAIG	05/2026
DRAWN	C. STARK	05/2026
CHECKED	D. LENZER	05/2026

Registered Professional Engineer (Civil) CERTIFICATE NO. 79706 JAMES G. MCCAIG Date Signed 05/08/26

BURGESS & NIPLE
1230 W. WASHINGTON ST. SUITE 511
TEMPE, AZ 85288

NORTHERN AVENUE PROFILE SHEET
STA 483+00 TO 488+00

SHEET P04

TRACS NO.

pw://tyli-pw.bentley.com:tyli-pw-01/Documents/Projects/221991.00_TT0372/600_CADD/05_Official/Dgn_PHASE 1/Sheets/B&N/TT0372_SC_Northern_Plan_008Prof.dgn

11:01:15 AM5/8/2026

F.H.W.A. REGION	STATE	PROJECT NO.	SHEET NO.	TOTAL SHEETS	RECORD DRAWING
9	AZ	TT0372	24	224	

Sidewalk Locations	
1	Sta 489+19.13, 60.58' Rt
2	Sta 489+19.13, 66.58' Rt
3	Sta 489+26.21, 63.47' Rt
4	Sta 489+21.96, 67.74' Rt
5	Sta 489+29.79, 66.97' Rt
6	Sta 489+25.54, 71.25' Rt
7	Sta 489+37.02, 69.85' Rt
8	Sta 489+37.12, 75.85' Rt
9	PT Sta 489+43.31, 69.75' Rt
10	Sta 489+43.41, 75.75' Rt

Sidewalk Locations	
11	PC Sta 489+67.50, 69.31' Rt
12	Sta 489+67.61, 75.31' Rt
13	Sta 489+73.11, 69.20' Rt
14	Sta 489+73.23, 75.20' Rt
15	Sta 489+81.57, 64.29' Rt
16	Sta 489+86.78, 67.34' Rt
17	Sta 489+86.22, 56.47' Rt
18	Sta 489+91.43, 59.51' Rt
19	Sta 490+00.11, 48.58' Rt
20	Sta 490+00.11, 54.58' Rt

Sidewalk Locations	
21	Sta 491+09.71, 48.58' Rt
22	Sta 491+09.44, 54.58' Rt
23	Sta 491+58.52, 52.74' Rt
24	Sta 491+59.63, 58.85' Rt
25	Sta 491+69.43, 47.61' Rt
26	Sta 491+70.55, 53.73' Rt
27A	Sta 492+01.05, 50.16' Rt
28A	Sta 491+98.97, 56.02' Rt
29	Sta 492+10.85, 57.00' Rt
30	Sta 492+08.77, 62.84' Rt

Sidewalk Locations	
31	Sta 492+59.65, 61.22' Rt
32	Sta 492+59.34, 67.21' Rt
33	Sta 492+84.73, 61.73' Rt
34	Sta 492+86.18, 67.76' Rt
35	Sta 492+95.25, 55.99' Rt
36	Sta 492+96.69, 62.03' Rt
37	Sta 488+75.30, 39.58' Lt
38	Sta 488+75.02, 31.58' Lt
39	Sta 489+00.40, 39.58' Lt
40	Sta 489+02.55, 31.58' Lt

27
Curve Data
PI Sta 489+04.56
Δ=03°35'49" Rt
D=00°38'12"
T=282.60'
L=565.01'
R=9000.00'

28
Curve Data
PI Sta 494+38.20
Δ=03°35'50" Lt
D=00°42'58"
T=251.22'
L=502.27'
R=8000.00'

SCALE: Hor: 1"=20'
Vert: NA
20 0 20 40
SCALE IN FEET

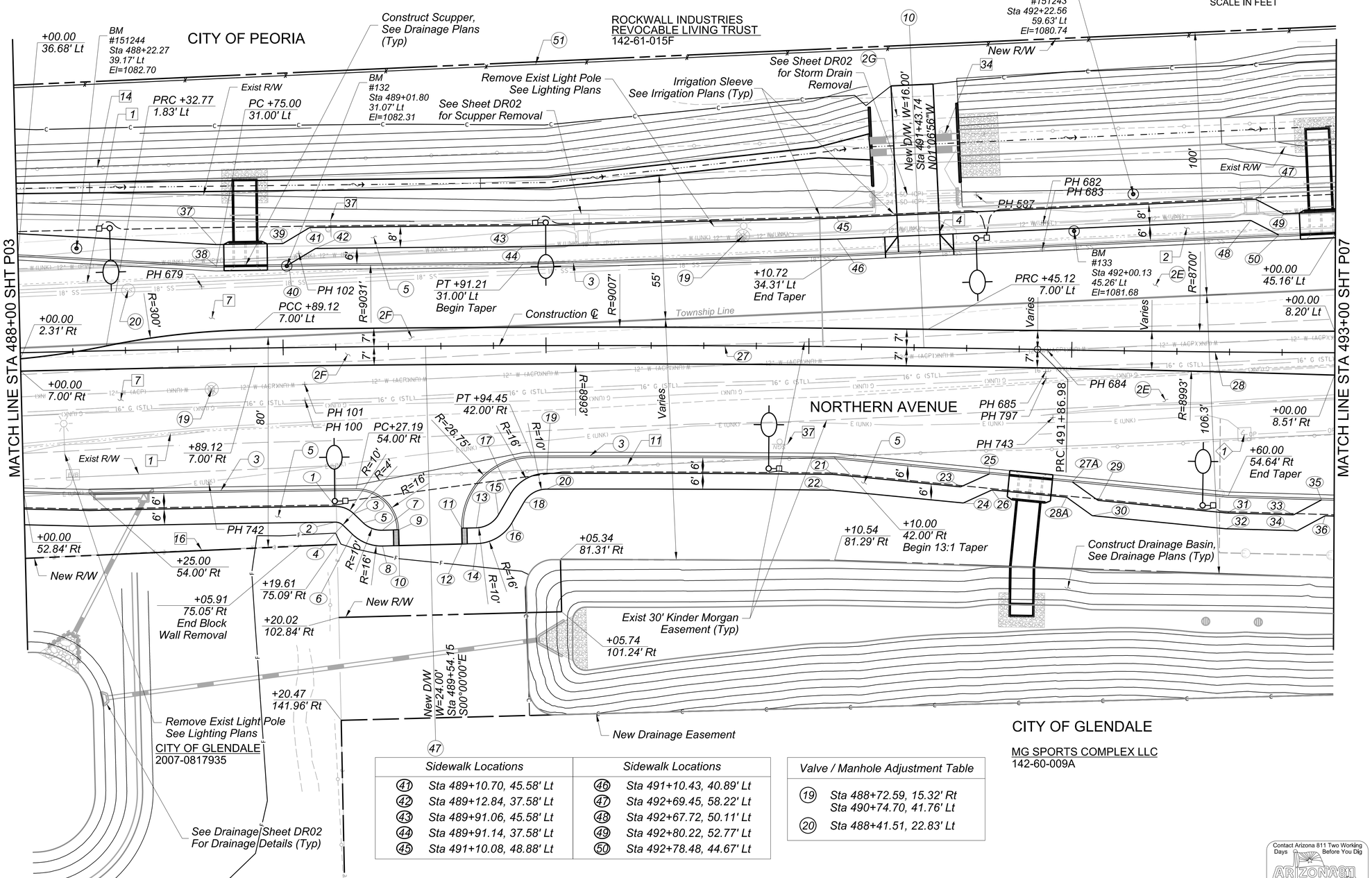

Sidewalk Locations		Sidewalk Locations	
41	Sta 489+10.70, 45.58' Lt	46	Sta 491+10.43, 40.89' Lt
42	Sta 489+12.84, 37.58' Lt	47	Sta 492+69.45, 58.22' Lt
43	Sta 489+91.06, 45.58' Lt	48	Sta 492+67.72, 50.11' Lt
44	Sta 489+91.14, 37.58' Lt	49	Sta 492+80.22, 52.77' Lt
45	Sta 491+10.08, 48.88' Lt	50	Sta 492+78.48, 44.67' Lt

Valve / Manhole Adjustment Table	
19	Sta 488+72.59, 15.32' Rt Sta 490+74.70, 41.76' Lt
20	Sta 488+41.51, 22.83' Lt

Contact Arizona 811 Two Working Days Before You Dig
ARIZONA811 BLUE STAKE, INC.
Call 811 or Click Arizona811.com

REMOVAL / RELOCATE

1	Remove Existing Concrete Curb/Curb and Gutter	621 LF
2	Remove Existing Concrete Sidewalk	2580 SF
4	Remove Existing Concrete Driveway	223 SF
7	Remove Asphalt Concrete	3005 SY
11	Remove Existing Chain Link Fence	353 LF
14	Remove Existing Barbed Wire Fence	482 LF
16	Remove Existing Block Wall	106 LF
34	Remove Gate	2 EA
37	Remove Post	2 EA

CONSTRUCTION

2E	Construct Roadway Pavement Section D	
	Subgrade Preparation	3746 SY
	12" Aggregate Base Course	1249 CY
	2" Asphalt Concrete Pavement (Superpave 1/2" Mix, High Traffic)	407 Ton
	3" Asphalt Concrete Pavement (Superpave 3/4" Mix, High Traffic)	611 Ton
	Tack Coat	1.25 Ton
2F	Construct Roadway Pavement Section I	
	Subgrade Preparation	756 SY
	4" Aggregate Base Course	84 CY
	2" Asphalt Concrete Pavement (Superpave 1/2" Mix, High Traffic)	82 Ton
	3" Asphalt Concrete Pavement (Superpave 3/4" Mix, High Traffic)	123 Ton
	Tack Coat	0.25 Ton
2G	Construct Roadway Pavement Section F	
	Subgrade Preparation	88 SY
	6" Aggregate Base Course	15 CY
	2.5" Asphalt Concrete Pavement (Superpave 1/2" Mix, High Traffic)	12 Ton
3	Construct Vertical Curb and Gutter, MAG Det 220-1, Type A	937 LF
5	Construct Sidewalk, MAG Det 230	6860 SF
10	Construct Driveway, MAG Det 250-1	254 SF
19	Adjust Valve Box & Cover,MAG Det 391, Type A	2 EA
20	Adjust Manhole to Grade, MAG Det 422	1 EA
47	Construct Driveway, COP Std Det PE-251-2	769 SF
51	Construct Barbed Wire Fence, Type 1, ADOT C-12.10	504 LF

BY OTHERS

1 Remove and Relocate Electrical Facilities by Others

NO.	REVISION	BY	DATE
3			
2			
1			

MARICOPA COUNTY

NORTHERN PARKWAY
103RD AVENUE TO 91ST AVENUE - PHASE 1
PROJECT NO. TT0372

	BY	DATE
DESIGNED	G. MCCAIG	05/2026
DRAWN	C. STARK	05/2026
CHECKED	D. LENZER	05/2026

Registered Professional Engineer (Civil) CERTIFICATE NO. 79706 JAMES G. MCCAIG Date 05/08/26

BURGESS & NIPLE
1230 W. WASHINGTON ST. SUITE 511
TEMPE, AZ 85288

NORTHERN AVENUE PLAN SHEET
STA 488+00 TO 493+00

SHEET P05

TRACS NO.

11:01:56 AM5/8/2026

pw://tyli-pw.bentley.com:tyli-pw-01/Documents/Projects/221991.00_TT0372/600_CADD/05_Official/Dgn_PHASE 1/Sheets/B&N/TT0372_SC_Northern_Plan_00C.dgn

F.H.W.A. REGION	STATE	PROJECT NO.	SHEET NO.	TOTAL SHEETS	RECORD DRAWING
9	AZ	TT0372	25	224	

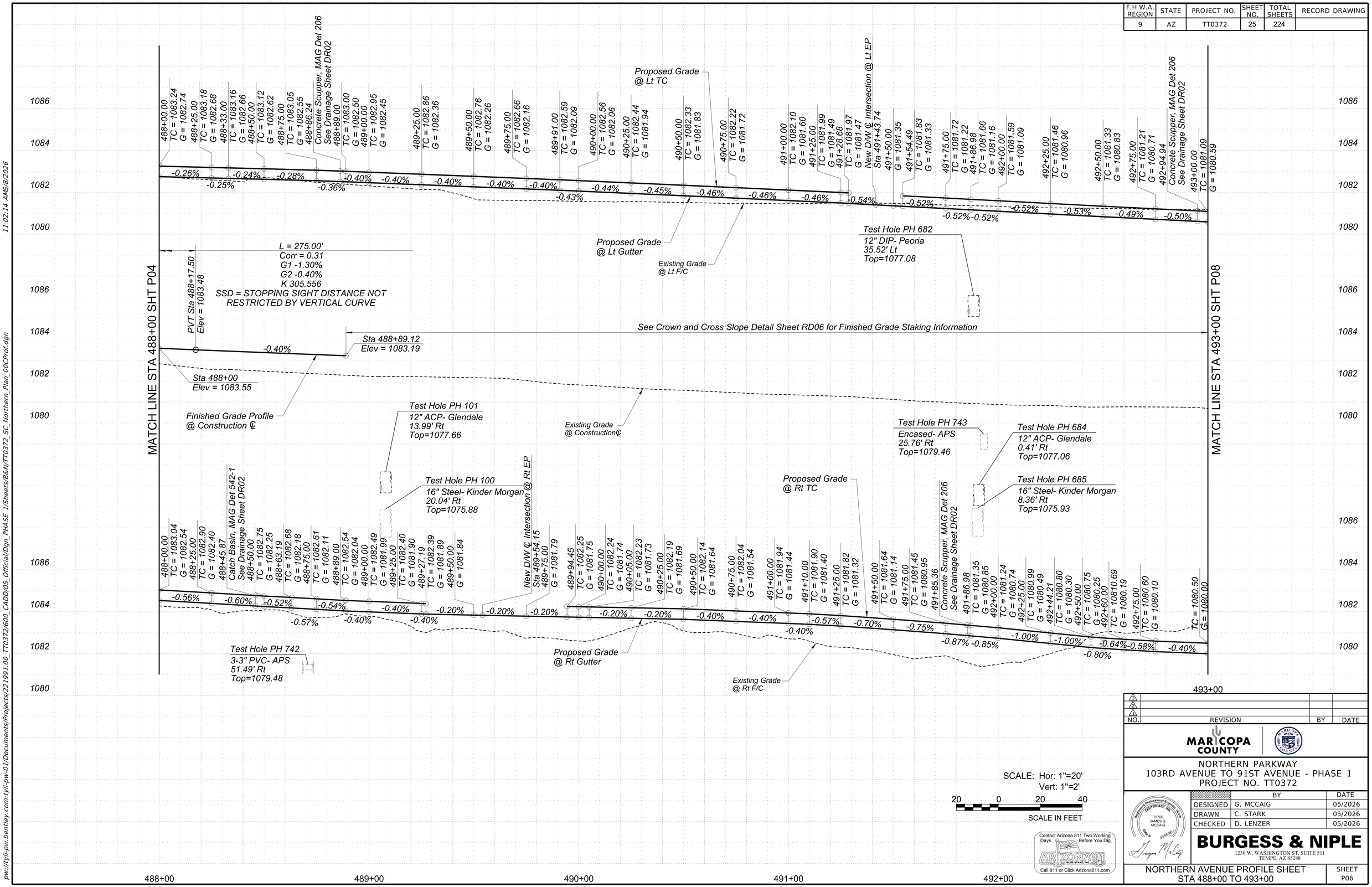

SCALE: Hor: 1"=20'
Vert: 1"=2'

20 0 20 40
SCALE IN FEET

Contact Arizona 811 Two Working Days Before You Dig
ARIZONA811 BLUE STAKE, INC.
Call 811 or Click Arizona811.com

NO.	REVISION	BY	DATE
3			
2			
1			

MARICOPA COUNTY

NORTHERN PARKWAY
103RD AVENUE TO 91ST AVENUE - PHASE 1
PROJECT NO. TT0372

	BY	DATE
DESIGNED	G. MCCAIG	05/2026
DRAWN	C. STARK	05/2026
CHECKED	D. LENZER	05/2026

Registered Professional Engineer (Civil) CERTIFICATE NO. 79706 JAMES G. MCCAIG Date Signed 05/28/26

BURGESS & NIPLE
1230 W. WASHINGTON ST. SUITE 511
TEMPE, AZ 85288

NORTHERN AVENUE PROFILE SHEET
STA 488+00 TO 493+00

SHEET P06

TRACS NO.

pw://tyli-pw.bentley.com:tyli-pw-01/Documents/Projects/221991.00_TT0372/600_CADD/05_Official/Dgn_PHASE 1/Sheets/B&N/TT0372_SC_Northern_Plan_00CProf.dgn 11:02:14 AM5/8/2026

F.H.W.A. REGION	STATE	PROJECT NO.	SHEET NO.	TOTAL SHEETS	RECORD DRAWING
9	AZ	TT0372	26	224	

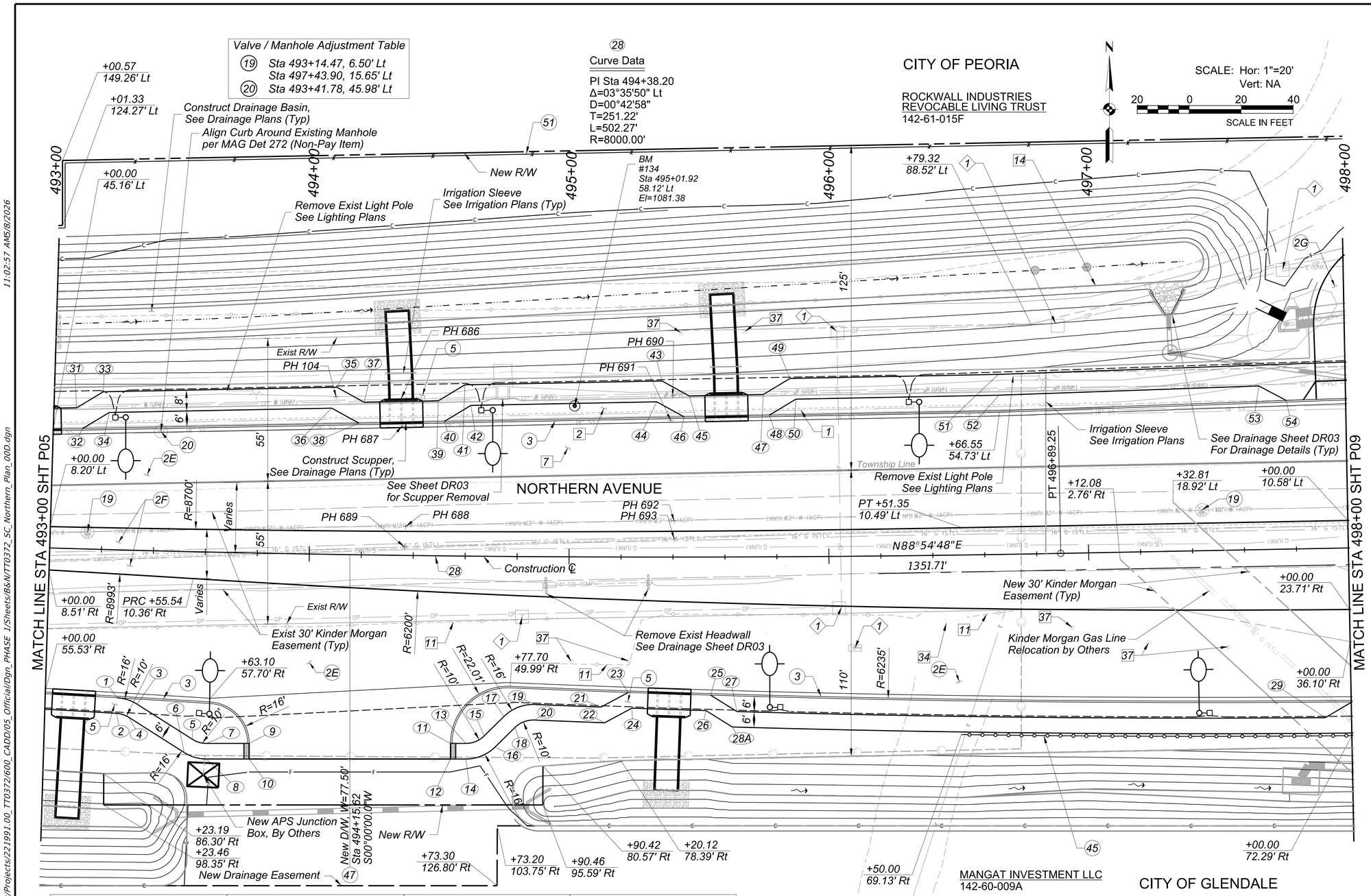

Sidewalk Locations	Sidewalk Locations	Sidewalk Locations	Sidewalk Locations
(1) Sta 493+27.58, 56.95' Rt	(11) PC Sta 494+55.12, 72.18' Rt	(21) Sta 495+12.46, 57.78' Rt	(31) Sta 493+08.87, 54.19' Lt
(2) Sta 493+27.39, 62.95' Rt	(12) Sta 494+55.18, 78.18' Rt	(22) Sta 495+13.87, 63.83' Rt	(32) Sta 493+11.41, 46.30' Lt
(3) Sta 493+35.21, 59.22' Rt	(13) Sta 494+60.97, 72.12' Rt	(23) Sta 495+22.90, 52.13' Rt	(33) Sta 493+19.04, 60.67' Lt
(4) Sta 493+32.15, 64.36' Rt	(14) Sta 494+61.03, 78.12' Rt	(24) Sta 495+24.30, 58.18' Rt	(34) Sta 493+21.57, 52.78' Lt
(5) Sta 493+56.70, 72.26' Rt	(15) Sta 494+67.90, 69.19' Rt	(25) Sta 495+54.37, 53.18' Rt	(35) Sta 494+09.60, 64.37' Lt
(6) Sta 493+53.63, 77.39' Rt	(16) Sta 494+72.10, 73.43' Rt	(26) Sta 495+52.58, 59.12' Rt	(36) Sta 494+07.72, 56.30' Lt
(7) Sta 493+62.05, 73.70' Rt	(17) Sta 494+75.45, 61.57' Rt	(27) Sta 495+64.42, 59.50' Rt	(37) Sta 494+20.27, 58.73' Lt
(8) Sta 493+62.18, 79.70' Rt	(18) Sta 494+79.65, 65.82' Rt	(28A) Sta 495+62.62, 65.45' Rt	(38) Sta 494+18.39, 50.67' Lt
(9) PT Sta 493+78.33, 73.35' Rt	(19) Sta 494+87.21, 56.91' Rt	(29) Sta 497+89.86, 65.19' Rt	(39) Sta 494+48.97, 59.66' Lt
(10) Sta 493+78.44, 79.35' Rt	(20) Sta 494+87.00, 62.91' Rt		(40) Sta 494+51.37, 51.72' Lt

Sidewalk Locations	Sidewalk Locations
(41) Sta 494+59.26, 65.96' Lt	(48) Sta 495+77.32, 54.52' Lt
(42) Sta 494+61.65, 58.03' Lt	(49) Sta 495+85.43, 68.64' Lt
(43) Sta 495+35.73, 67.82' Lt	(50) Sta 495+87.70, 60.67' Lt
(44) Sta 495+33.73, 59.78' Lt	(51) Sta 496+66.38, 69.31' Lt
(45) Sta 495+46.32, 62.02' Lt	(52) Sta 496+66.47, 61.31' Lt
(46) Sta 495+44.31, 53.98' Lt	(53) Sta 497+66.69, 63.01' Lt
(47) Sta 495+75.04, 62.49' Lt	(54) Sta 497+77.18, 57.19' Lt

Contact Arizona 811 Two Working Days Before You Dig
Call 811 or Click Arizona811.com

☐ REMOVAL / RELOCATE ☐

1	Remove Existing Concrete Curb/Curb and Gutter	408 LF
2	Remove Existing Concrete Sidewalk	2459 SF
7	Remove Asphalt Concrete	2676 SY
11	Remove Existing Chain Link Fence	371 LF
14	Remove Existing Barbed Wire Fence	502 LF
34	Remove Gate	1 EA
37	Remove Post Sta 495+01.09, 40.33' Rt Sta 495+23.08, 40.02' Rt Sta 495+43.21, 86.28' Lt Sta 495+67.97, 86.71' Lt Sta 496+93.19, 28.69' Rt Sta 497+22.43, 34.99' Rt Sta 497+53.11, 37.19' Rt	7 EA
P	Protect in Place	

○ CONSTRUCTION ○

(2E)	Construct Roadway Pavement Section D	
	Subgrade Preparation	4321 SY
	12" Aggregate Base Course	1440 CY
	2" Asphalt Concrete Pavement (Superpave 1/2" Mix, High Traffic)	470 Ton
	3" Asphalt Concrete Pavement (Superpave 3/4" Mix, High Traffic)	705 Ton
	Tack Coat	1.44 Ton
(2F)	Construct Roadway Pavement Section I	
	Subgrade Preparation	1489 SY
	4" Aggregate Base Course	165 CY
	2" Asphalt Concrete Pavement (Superpave 1/2" Mix, High Traffic)	162 Ton
	3" Asphalt Concrete Pavement (Superpave 3/4" Mix, High Traffic)	243 Ton
	Tack Coat	0.50 Ton
(2G)	Construct Roadway Pavement Section F	
	Subgrade Preparation	43 SY
	6" Aggregate Base Course	7 CY
	2.5" Asphalt Concrete Pavement (Superpave 1/2" Mix, High Traffic)	6 Ton
(3)	Construct Vertical Curb and Gutter, MAG Det 220-1, Type A	886 LF
(5)	Construct Sidewalk, MAG Det 230	6695 SF
(19)	Adjust Valve Box & Cover,MAG Det 391, Type A	2 EA
(20)	Adjust Manhole to Grade, MAG Det 422	1 EA
(45)	Safety Rail, Height 3'-6" MAG Det 145	151 LF
(47)	Construct Driveway, COP Std Det PE-251-2	2240 SF
(51)	Construct Barbed Wire Fence, Type 1, ADOT C-12.10	519 LF

◇ BY OTHERS ◇

◇1 Remove and Relocate Electrical Facilities by Others

NO.	REVISION	BY	DATE
3			
2			
1			

MARICOPA COUNTY

NORTHERN PARKWAY
103RD AVENUE TO 91ST AVENUE - PHASE 1
PROJECT NO. TT0372

	BY	DATE
DESIGNED	G. MCCAIG	05/2026
DRAWN	C. STARK	05/2026
CHECKED	D. LENZER	05/2026

Registered Professional Engineer (Civil) CERTIFICATE NO. 79706 JAMES G. MCCAIG Date of Seal 05/08/2026

BURGESS & NIPLE
1230 W. WASHINGTON ST. SUITE 511
TEMPE, AZ 85288

NORTHERN AVENUE PLAN SHEET
STA 493+00 TO 498+00

SHEET P07

TRACS NO.

pw://tyli-pw.bentley.com:tyli-pw-01/Documents/Projects/221991.00_TT0372/600_CADD/05_Official/Dgn_PHASE 1/Sheets/B&N/TT0372_SC_Northern_Plan_00D.dgn 11:02:57 AM5/8/2026

F.H.W.A. REGION	STATE	PROJECT NO.	SHEET NO.	TOTAL SHEETS	RECORD DRAWING
9	AZ	TT0372	27	224	

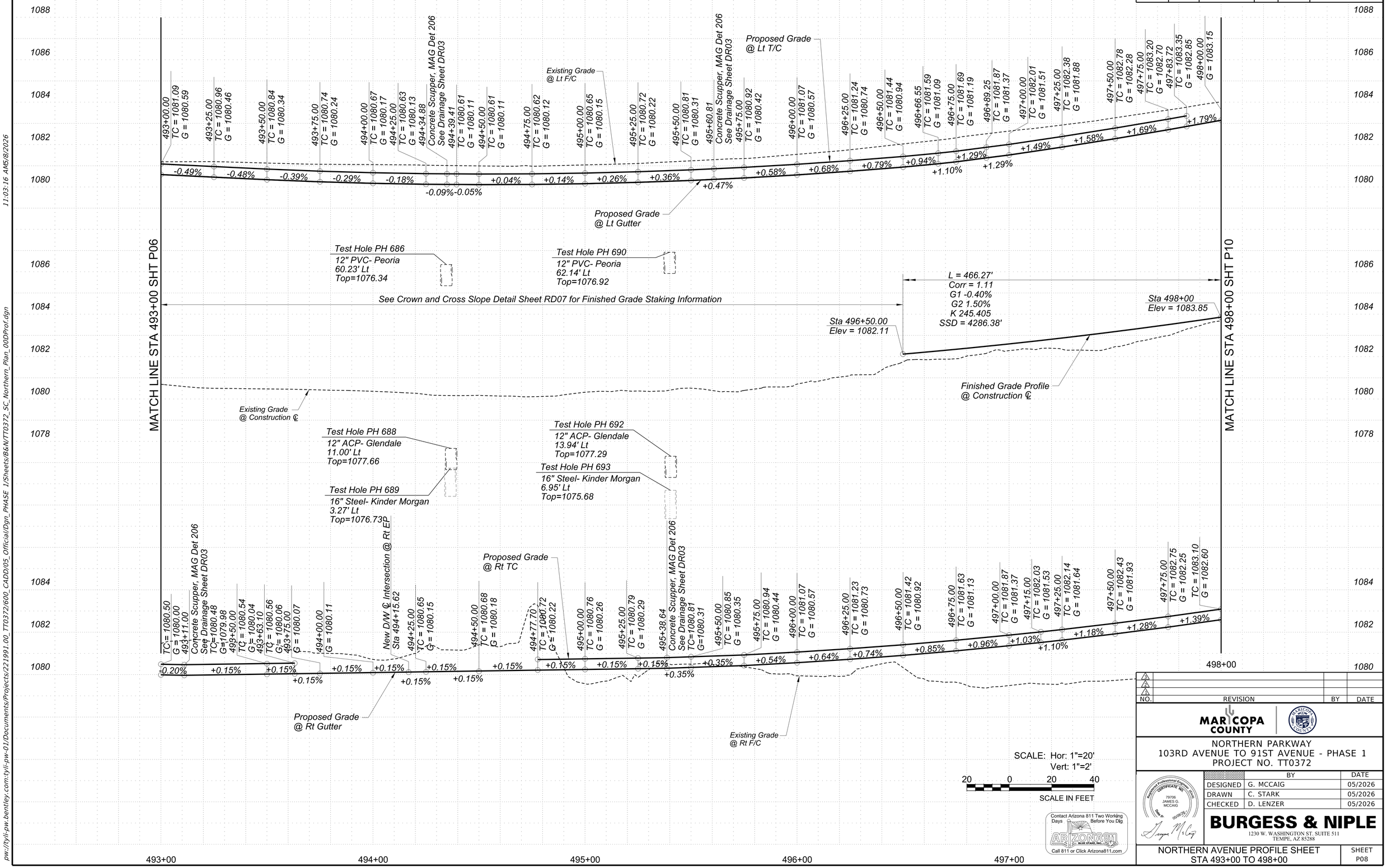

NO.	REVISION	BY	DATE
3			
2			
1			

MARICOPA COUNTY

NORTHERN PARKWAY
103RD AVENUE TO 91ST AVENUE - PHASE 1
PROJECT NO. TT0372

SCALE: Hor: 1"=20'
Vert: 1"=2'

20 0 20 40
SCALE IN FEET

Contact Arizona 811 Two Working Days Before You Dig
Call 811 or Click Arizona811.com

	BY	DATE
DESIGNED	G. MCCAIG	05/2026
DRAWN	C. STARK	05/2026
CHECKED	D. LENZER	05/2026

Registered Professional Engineer (Civil) CERTIFICATE NO. 79706 JAMES G. MCCAIG Date 05/08/2026

BURGESS & NIPLE
1230 W. WASHINGTON ST. SUITE 511
TEMPE, AZ 85288

NORTHERN AVENUE PROFILE SHEET
STA 493+00 TO 498+00

SHEET P08

TRACS NO.

pw://tyli-pw.bentley.com:tyli-pw-01/Documents/Projects/221991.00_TT0372/600_CADD/05_Official/Dgn_PHASE 1/Sheets/B&N/TT0372_SC_Northern_Plan_00DProf.dgn 11:03:16 AM5/8/2026

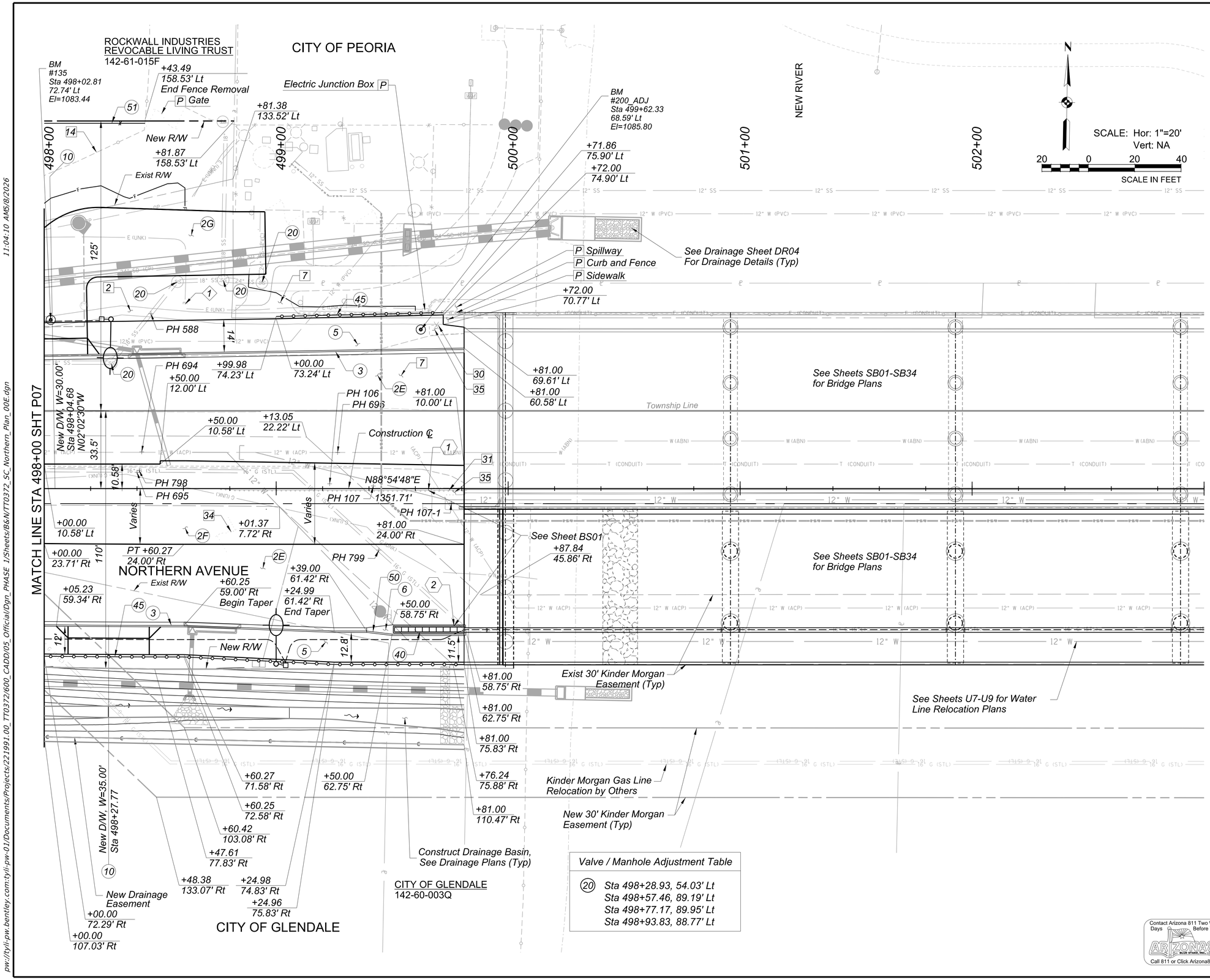

Valve / Manhole Adjustment Table
(20) Sta 498+28.93, 54.03' Lt Sta 498+57.46, 89.19' Lt Sta 498+77.17, 89.95' Lt Sta 498+93.83, 88.77' Lt

Contact Arizona 811 Two Working Days Before You Dig
Call 811 or Click Arizona811.com

F.H.W.A. REGION	STATE	PROJECT NO.	SHEET NO.	TOTAL SHEETS	RECORD DRAWING
9	AZ	TT0372	28	224	

☐ REMOVAL / RELOCATE ☐

1	Remove Existing Concrete Curb/Curb and Gutter	57 LF
2	Remove Existing Concrete Sidewalk	778 SF
7	Remove Asphalt Concrete	1037 SY
11	Remove Existing Chain Link Fence	57 LF
14	Remove Existing Barbed Wire Fence	53 LF
30	Remove Existing Scupper	1 EA
31	Remove Guardrail	108 LF
34	Remove Gate	1 EA
35	Remove Concrete Spillway	343 SF
39	Remove Existing Concrete Single Curb	57 LF
P	Protect in Place	

○ CONSTRUCTION ○

2E	Construct Roadway Pavement Section D	
	Subgrade Preparation	1622 SY
	12" Aggregate Base Course	541 CY
	2" Asphalt Concrete Pavement (Superpave 1/2" Mix, High Traffic)	176 Ton
	3" Asphalt Concrete Pavement (Superpave 3/4" Mix, High Traffic)	265 Ton
	Tack Coat	0.54 Ton
2F	Construct Roadway Pavement Section I	
	Subgrade Preparation	702 SY
	4" Aggregate Base Course	78 CY
	2" Asphalt Concrete Pavement (Superpave 1/2" Mix, High Traffic)	76 Ton
	3" Asphalt Concrete Pavement (Superpave 3/4" Mix, High Traffic)	115 Ton
	Tack Coat	0.23 Ton
2G	Construct Roadway Pavement Section F	
	Subgrade Preparation	332 SY
	6" Aggregate Base Course	55 CY
	2.5" Asphalt Concrete Pavement (Superpave 1/2" Mix, High Traffic)	45 Ton
3	Construct Vertical Curb and Gutter, MAG Det 220-1, Type A	363 LF
5	Construct Sidewalk, MAG Det 230	3987 SF
6	Construct 9" Thick, Class A Concrete	154 SF
10	Construct Driveway, MAG Det 250-1	901 SF
20	Adjust Manhole to Grade, MAG Det 422	4 EA
40	Furnish and Install Barrier Attenuator	1 EA
45	Safety Rail, Height 3'-6" MAG Det 145	247 LF
50	Construct Single Curb, MAG Det 222, Type B	43 LF
51	Construct Barbed Wire Fence, Type 1, ADOT C-12.10	44 LF

◇ BY OTHERS ◇

1	Remove and Relocate Electrical Facilities by Others

NO.	REVISION	BY	DATE
3			
2			
1			

MARICOPA COUNTY

NORTHERN PARKWAY
103RD AVENUE TO 91ST AVENUE - PHASE 1
PROJECT NO. TT0372

	BY	DATE
DESIGNED	G. MCCAIG	05/2026
DRAWN	C. STARK	05/2026
CHECKED	D. LENZER	05/2026

Registered Professional Engineer (Civil) CERTIFICATE NO. 79706 JAMES G. MCCAIG Date Signed 05/08/26

BURGESS & NIPLE
1230 W. WASHINGTON ST. SUITE 511
TEMPE, AZ 85288

NORTHERN AVENUE PLAN SHEET
STA 498+00 TO 503+00

SHEET P09

TRACS NO.

pw://tyli-pw.bentley.com:tyli-pw-01/Documents/Projects/221991.00_TT0372/600_CADD/05_Official/Dgn_PHASE 1/Sheets/B&N/TT0372_SC_Northern_Plan_00E.dgn

11:04:10 AM5/8/2026

F.H.W.A. REGION	STATE	PROJECT NO.	SHEET NO.	TOTAL SHEETS	RECORD DRAWING
9	AZ	TT0372	29	224	

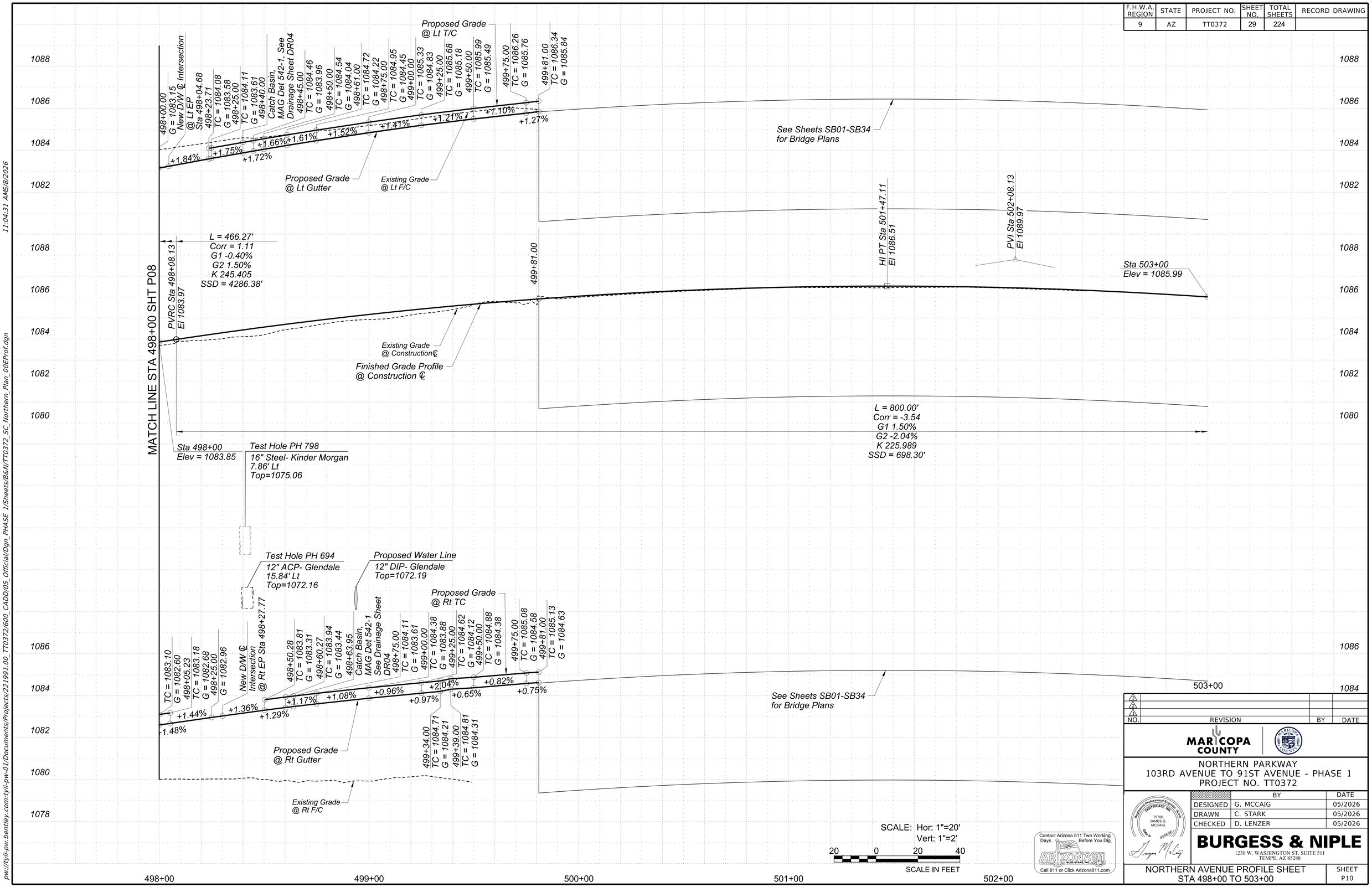

NO.	REVISION	BY	DATE
3			
2			
1			

MARICOPA COUNTY

NORTHERN PARKWAY
103RD AVENUE TO 91ST AVENUE - PHASE 1
PROJECT NO. TT0372

	BY	DATE
DESIGNED	G. MCCAIG	05/2026
DRAWN	C. STARK	05/2026
CHECKED	D. LENZER	05/2026

Registered Professional Engineer (Civil) CERTIFICATE NO. 79706 JAMES G. MCCAIG Date 05/08/26

BURGESS & NIPLE
1230 W. WASHINGTON ST. SUITE 511
TEMPE, AZ 85288

NORTHERN AVENUE PROFILE SHEET
STA 498+00 TO 503+00

SHEET P10

TRACS NO.

pw://tyli-pw.bentley.com:tyli-pw-01/Documents/Projects/221991.00_TT0372/600_CADD/05_Official/Dgn_PHASE 1/Sheets/B&N/TT0372_SC_Northern_Plan_00EProf.dgn

11:04:31 AM5/8/2026

F.H.W.A. REGION	STATE	PROJECT NO.	SHEET NO.	TOTAL SHEETS	RECORD DRAWING
9	AZ	TT0372	30	224	

☐ REMOVAL / RELOCATE ☐

11	Remove Existing Chain Link Fence	114 LF
12	Remove Existing Gate	1 EA
14	Remove Existing Barbed Wire Fence	349 LF

◯ CONSTRUCTION ◯

◇ BY OTHERS ◇

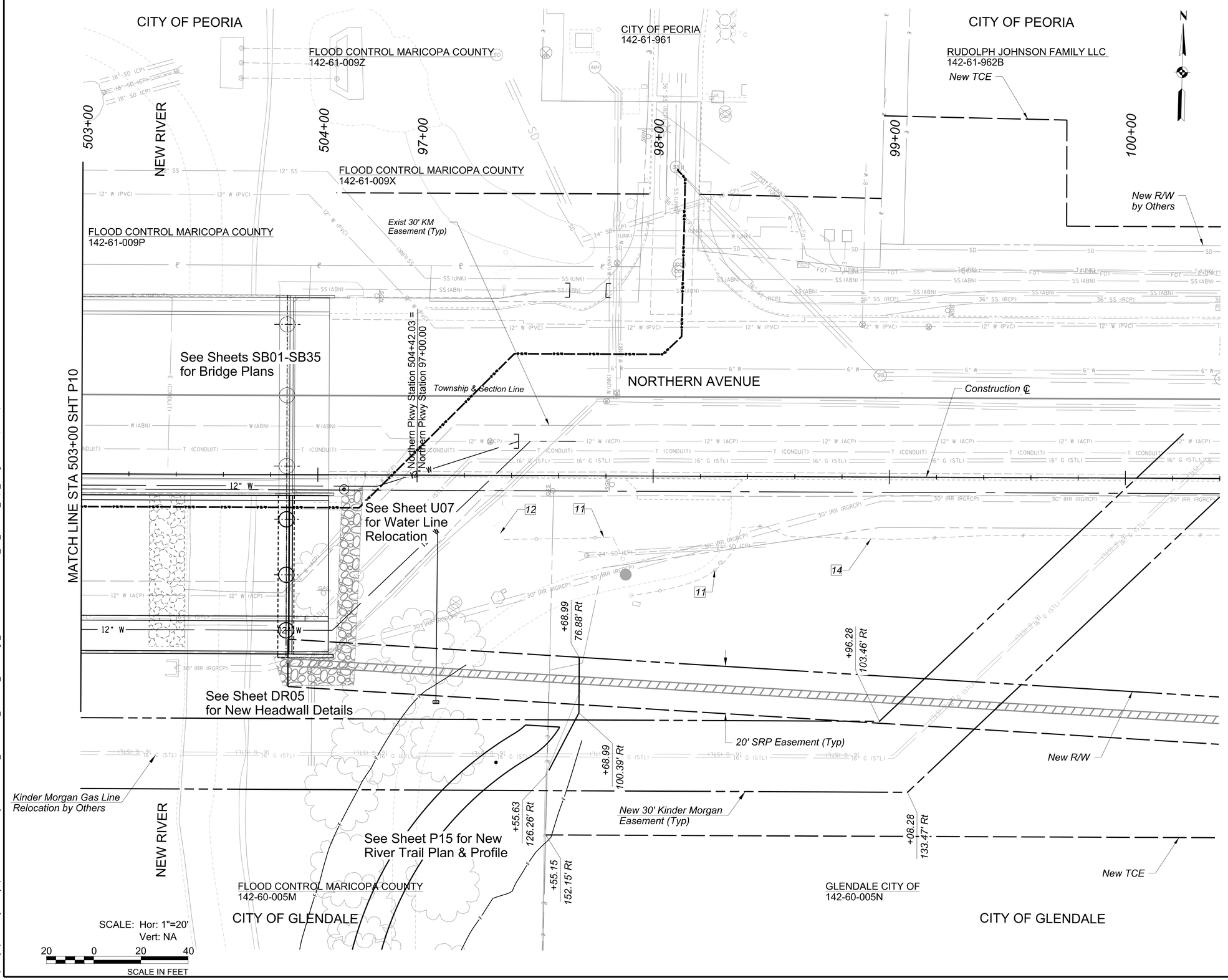

Contact Arizona 811 Two Working Days Before You Dig
ARIZONA811 BLUE STAKE, INC.
Call 811 or Click Arizona811.com

NO.	REVISION	BY	DATE
3			
2			
1			

MARICOPA COUNTY

NORTHERN PARKWAY
103RD AVENUE TO 91ST AVENUE - PHASE 1
PROJECT NO. TT0372

	BY	DATE
DESIGNED	B. POE	05/2026
DRAWN	C. BURDETT	05/2026
CHECKED	J. BARR	05/2026

BRENAN POE — REGISTERED PROFESSIONAL ENGINEER (CIVIL) — CERTIFICATE NO. 56184 — ARIZONA, U.S.A.

TYLin

NORTHERN AVENUE - PAVING PLAN
STA 503+00 TO 100+40

SHEET P11

TRACS NO.

$PLTDRVS$ $PENTBLS$ 10:31:16 AM 5/7/2026 $USER$ $Date$ pw://tylj-pw.bentley.com:tylj-pw-01/Documents/Projects/221991.00_TT0372/600_CADD/05_Official/Dgn_PHASE 1/Sheets/TT0372_SC_Northern_Pkwy.dgn

F.H.W.A. REGION	STATE	PROJECT NO.	SHEET NO.	TOTAL SHEETS	RECORD DRAWING
9	AZ	TT0372	31	224	

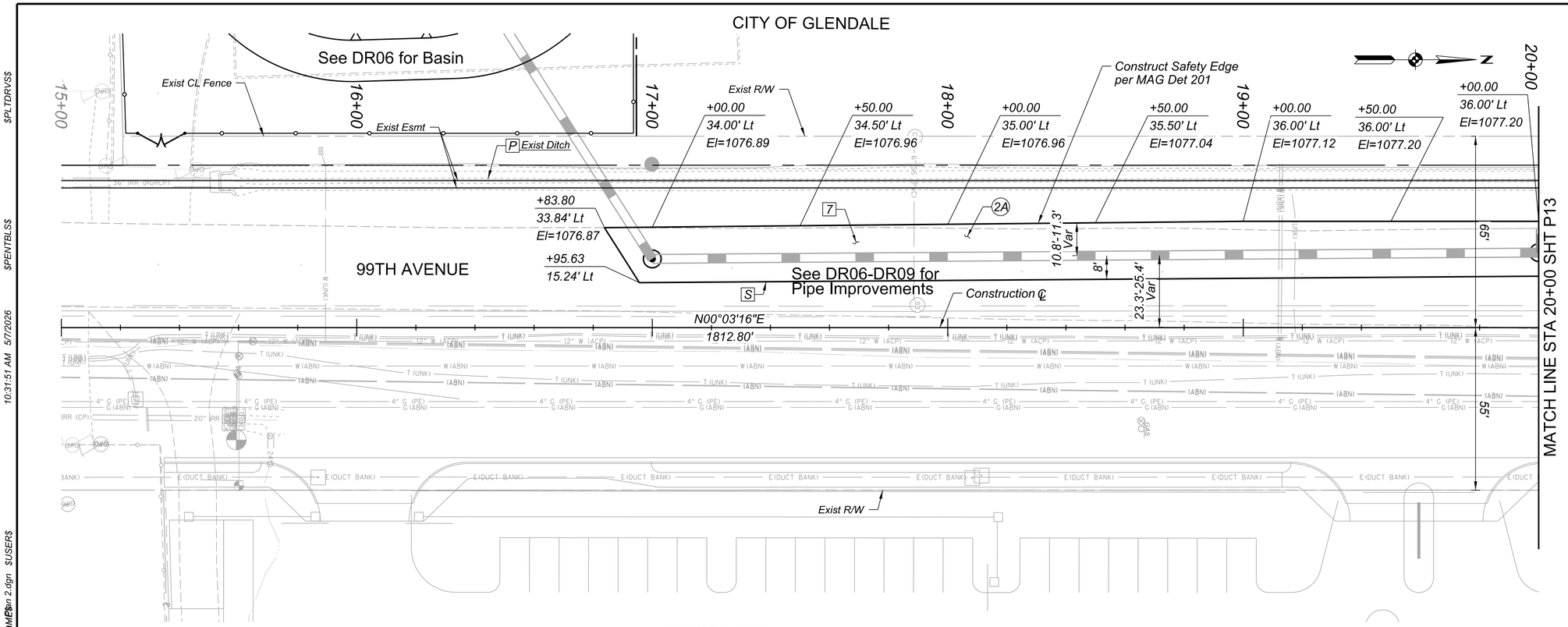

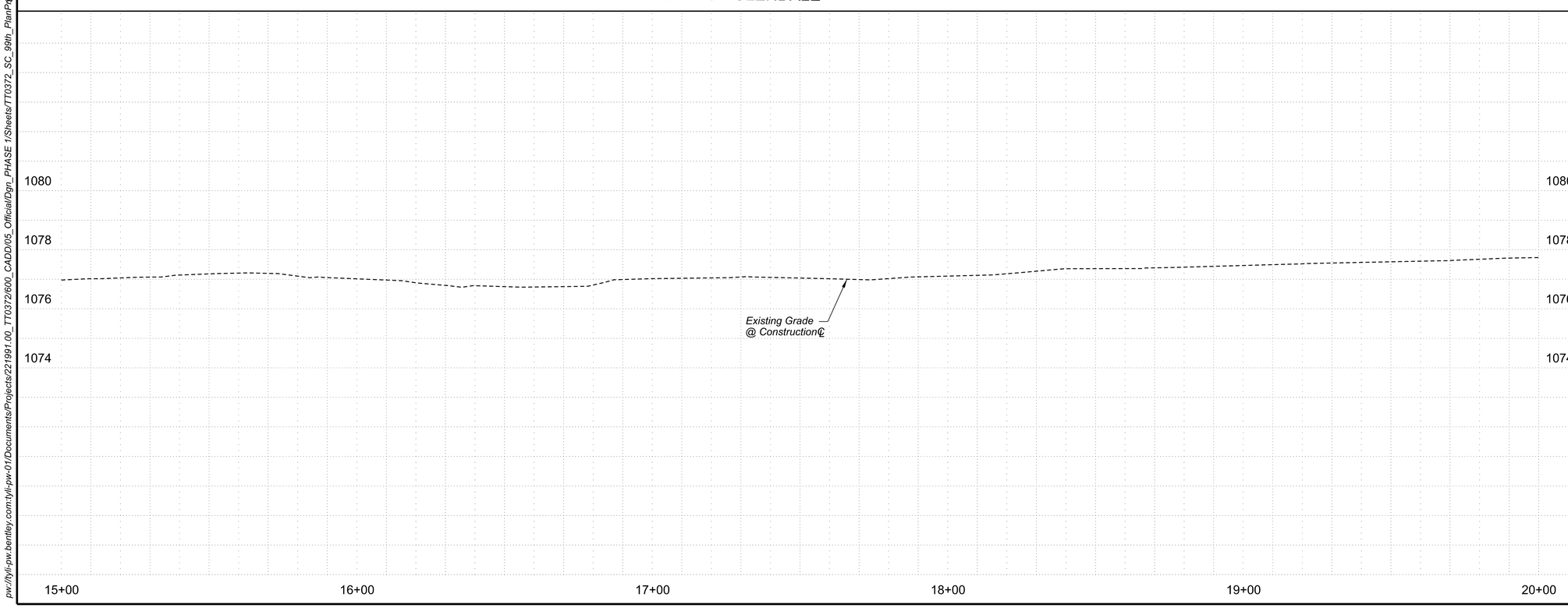

☐ REMOVAL / RELOCATE ☐

7 Remove Asphalt Concrete — 592 SY
P Protect in Place
S Sawcut and Match Existing

◯ CONSTRUCTION ◯

2A Construct Roadway Pavement Section D

Subgrade Preparation	593 SY
12" Aggregate Base Course	198 CY
2" Asphalt Concrete Pavement (Superpave 1/2" Mix, High Traffic)	107 Ton
3" Asphalt Concrete Pavement (Superpave 3/4" Mix, High Traffic)	71 Ton
Tack Coat	0.20 Ton

SCALE: Hor: 1"=20'
Vert: 1"=2'

20 0 20 40
SCALE IN FEET

Contact Arizona 811 Two Working Days Before You Dig
Call 811 or Click Arizona811.com

NO.	REVISION	BY	DATE
3			
2			
1			

MARICOPA COUNTY

NORTHERN PARKWAY
103RD AVENUE TO 91ST AVENUE - PHASE 1
PROJECT NO. TT0372

	BY	DATE
DESIGNED	B. POE	05/2026
DRAWN	C. BURDETT	05/2026
CHECKED	J. BARR	05/2026

BRENAN POE
Date Signed
ARIZONA, U.S.A.

TYLin

99TH AVENUE - PAVING PLAN & PROFILE
STA 15+00 TO 20+00

SHEET P12

TRACS NO.

$PLTDRVS$ $PENTBLS$ 10:31:51 AM 5/7/2026

pw://tyli-pw.bentley.com:tyli-pw-01/Documents/Projects/221991.00_TT0372/600_CADD/05_Official/Dgn_PHASE 1/Sheets/TT0372_SC_99th_PlanProfile2.dgn $USERS$

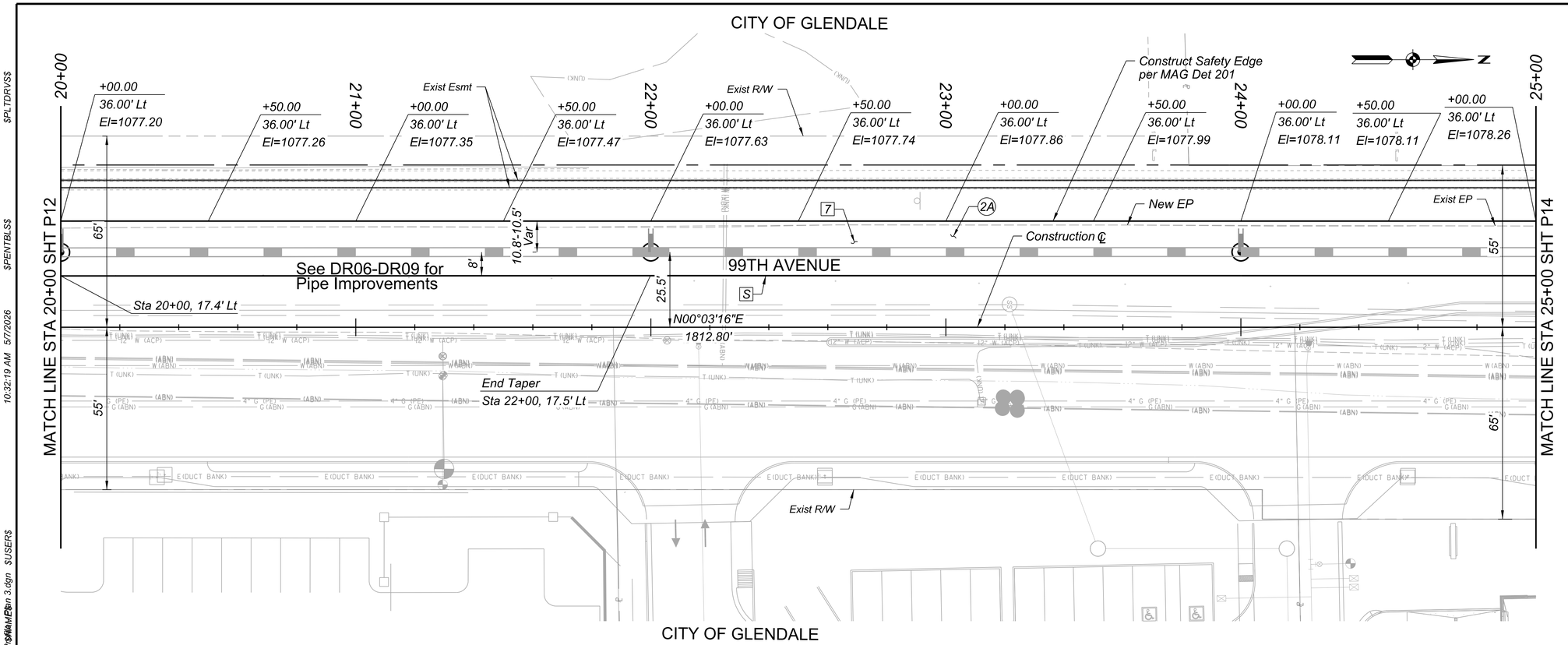

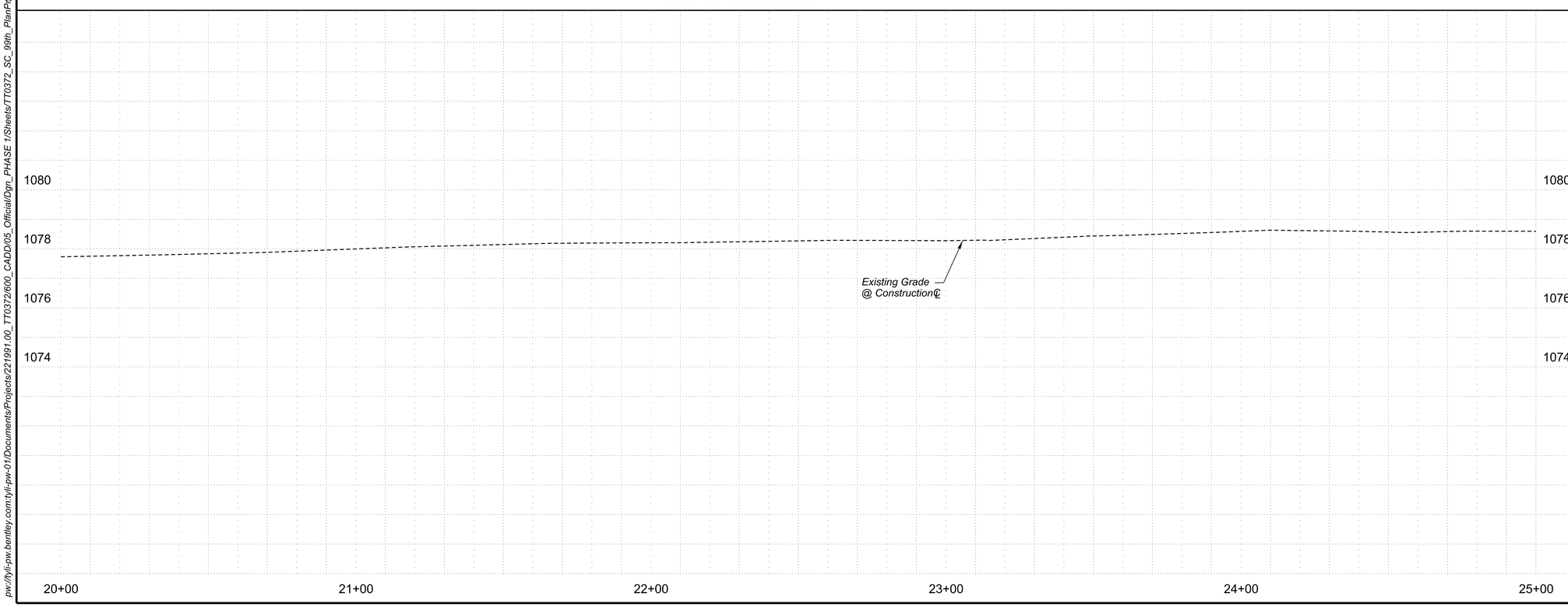

F.H.W.A. REGION	STATE	PROJECT NO.	SHEET NO.	TOTAL SHEETS	RECORD DRAWING
9	AZ	TT0372	32	224	

☐ *REMOVAL / RELOCATE* ☐

7 *Remove Asphalt Concrete* 931 SY

S *Sawcut and Match Existing*

◯ *CONSTRUCTION* ◯

2A *Construct Roadway Pavement Section D*

Subgrade Preparation	933 SY
12" Aggregate Base Course	311 CY
2" Asphalt Concrete Pavement (Superpave 1/2" Mix, High Traffic)	168 Ton
3" Asphalt Concrete Pavement (Superpave 3/4" Mix, High Traffic)	112 Ton
Tack Coat	0.29 Ton

SCALE: Hor: 1"=20'
Vert: 1"=2'

20 0 20 40
SCALE IN FEET

Contact Arizona 811 Two Working Days Before You Dig
Call 811 or Click Arizona811.com

NO.	REVISION	BY	DATE
3			
2			
1			

MARICOPA COUNTY

NORTHERN PARKWAY
103RD AVENUE TO 91ST AVENUE - PHASE 1
PROJECT NO. TT0372

	BY	DATE
DESIGNED	B. POE	05/2026
DRAWN	C. BURDETT	05/2026
CHECKED	J. BARR	05/2026

BRENAN POE
Registered Professional Engineer
ARIZONA, U.S.A.

TYLin

99TH AVENUE - PAVING PLAN & PROFILE
STA 20+00 TO 25+00

SHEET P13

TRACS NO.

$PLTDRVS$ $PENTBLS$ 10:32:19 AM 5/7/2026 $USER$

pw://tyli-pw.bentley.com:tyli-pw-01/Documents/Projects/221991.00_TT0372/600_CADD/05_Official/Dgn_PHASE 1/Sheets/TT0372_SC_99th_PlanProfile_Plan 3.dgn

F.H.W.A. REGION	STATE	PROJECT NO.	SHEET NO.	TOTAL SHEETS	RECORD DRAWING
9	AZ	TT0372	33	224	

☐ REMOVAL / RELOCATE ☐

7 Remove Asphalt Concrete 232 SY

S Sawcut and Match Existing

◯ CONSTRUCTION ◯

2A Construct Roadway Pavement Section D

Subgrade Preparation	275 SY
12" Aggregate Base Course	92 CY
2" Asphalt Concrete Pavement (Superpave 1/2" Mix, High Traffic)	49 Ton
3" Asphalt Concrete Pavement (Superpave 3/4" Mix, High Traffic)	33 Ton
Tack Coat	0.09 Ton

◇ BY OTHERS ◇

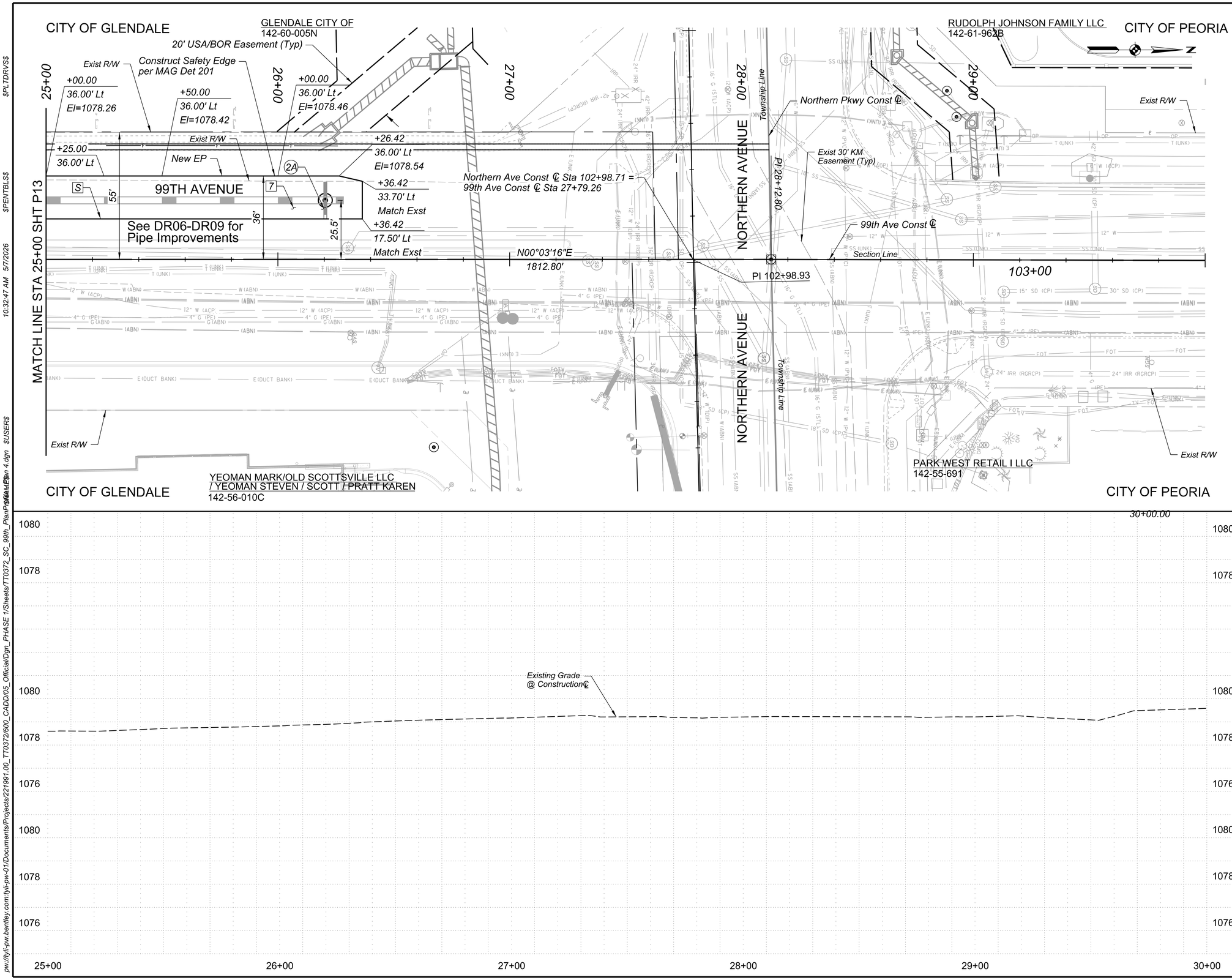

SCALE: Hor: 1"=20'
Vert: 1"=2'

20 0 20 40
SCALE IN FEET

Contact Arizona 811 Two Working Days Before You Dig
Call 811 or Click Arizona811.com

NO.	REVISION	BY	DATE
3			
2			
1			

MARICOPA COUNTY

NORTHERN PARKWAY
103RD AVENUE TO 91ST AVENUE - PHASE 1
PROJECT NO. TT0372

	BY	DATE
DESIGNED	B. POE	05/2026
DRAWN	C. BURDETT	05/2026
CHECKED	J. BARR	05/2026

BRENAN POE
Date Signed
ARIZONA, U.S.A.

TYLin

99TH AVENUE - PAVING PLAN & PROFILE
STA 25+00 TO 30+00

SHEET P14

TRACS NO.

pw://tyli-pw.bentley.com:tyli-pw-01/Documents/Projects/221991.00_TT0372/600_CADD/05_Official/Dgn_PHASE 1/Sheets/TT0372_SC_99th_PlanProfile_Sheet_Plan 4.dgn $USER$ 10:32:47 AM 5/7/2026 $PENTBL$$ $PLTDRV$$

F.H.W.A. REGION	STATE	PROJECT NO.	SHEET NO.	TOTAL SHEETS	RECORD DRAWING
9	AZ	TT0372	34	224	

☐ REMOVAL / RELOCATE ☐

2 Remove Existing Concrete Sidewalk 6078 SF
P Protect in Place
S Sawcut and Match Existing

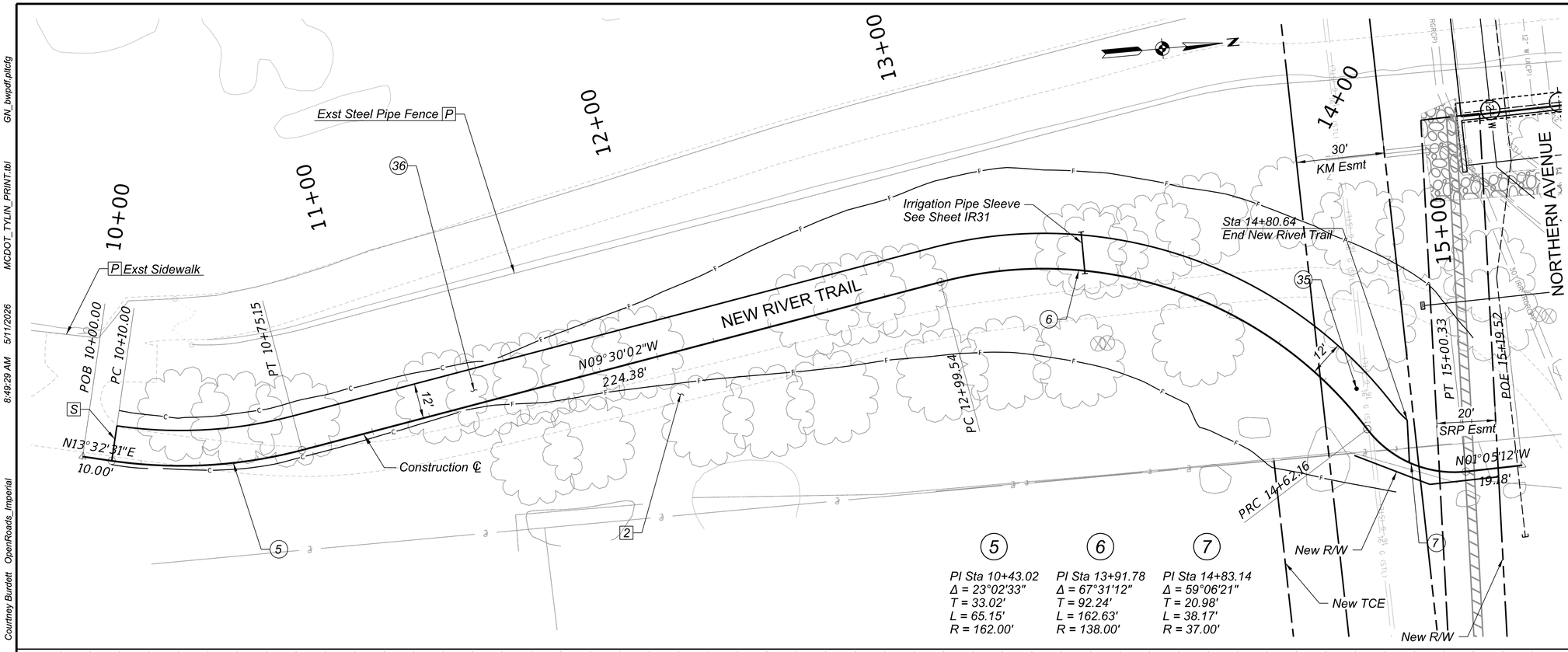

5
PI Sta 10+43.02
Δ = 23°02'33"
T = 33.02'
L = 65.15'
R = 162.00'

6
PI Sta 13+91.78
Δ = 67°31'12"
T = 92.24'
L = 162.63'
R = 138.00'

7
PI Sta 14+83.14
Δ = 59°06'21"
T = 20.98'
L = 38.17'
R = 37.00'

○ CONSTRUCTION ○

35 Construct Bollard, MAG Det 140 1 EA

36 Construct Trail Pavement Section H
Subgrade Preparation 625 SY
4" Aggregate Base Course 69 CY
Portland Cement Concrete Pavement (PCCP), 8in Thick 625 SY

◇ BY OTHERS ◇

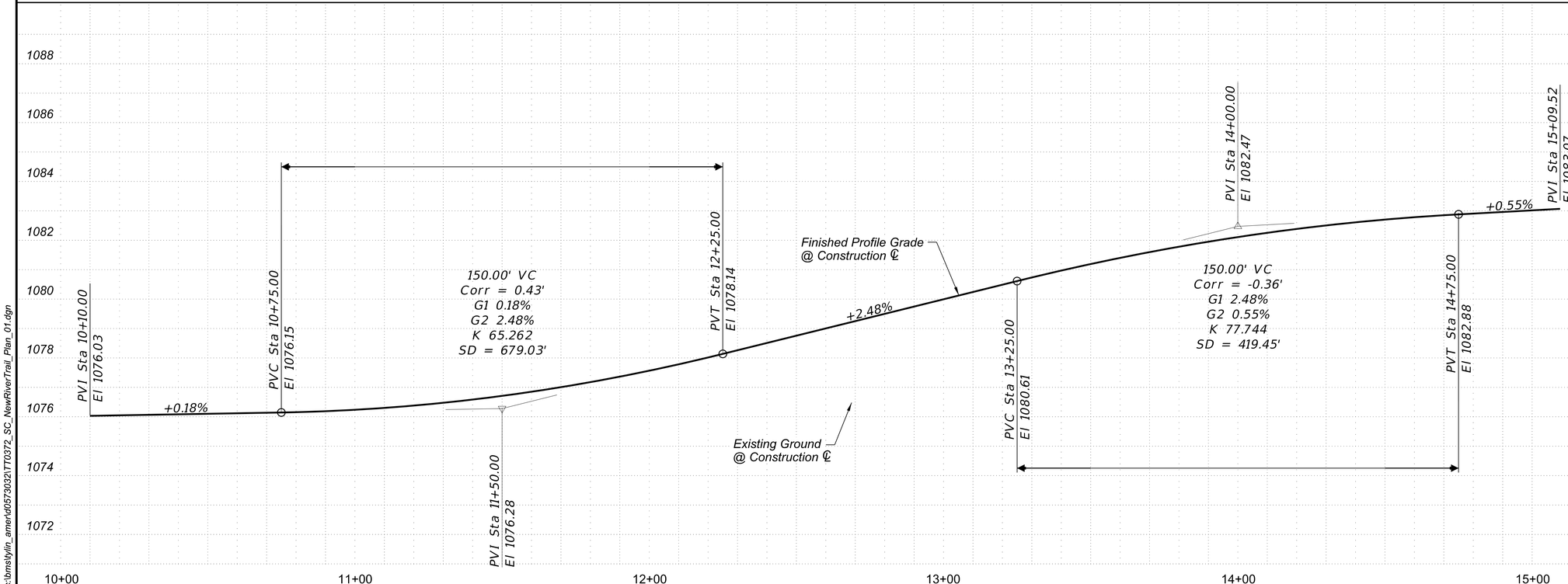

SCALE: Hor: 1"=20'
Vert: 1"=2'
20 0 20 40
SCALE IN FEET

Contact Arizona 811 Two Working Days Before You Dig
ARIZONA811 BLUE STAKE, INC.
Call 811 or Click Arizona811.com

NO.	REVISION	BY	DATE
3			
2			
1			

MARICOPA COUNTY

NORTHERN PARKWAY
103RD AVENUE TO 91ST AVENUE - PHASE 1
PROJECT NO. TT0372

	BY	DATE
DESIGNED	B. POE	05/2026
DRAWN	C. BURDETT	05/2026
CHECKED	J. BARR	05/2026

BRENAN POE
ARIZONA, U.S.A.

TYLin

NEW RIVER TRAIL PLAN AND PROFILE SHEET
STA 10+00 TO 14+80.64

SHEET P15

TRACS NO.

GN_bwpdf.pltcfg
MCDOT_TYLIN_PRINT.tbl
8:49:29 AM 5/11/2026
Courtney Burdett OpenRoads_Imperial
c:\bmstylin_amer\d0573032\TT0372_SC_NewRiverTrail_Plan_01.dgn

F.H.W.A. REGION	STATE	PROJECT NO.	SHEET NO.	TOTAL SHEETS	RECORD DRAWING
9	AZ	TT0372	35	224	

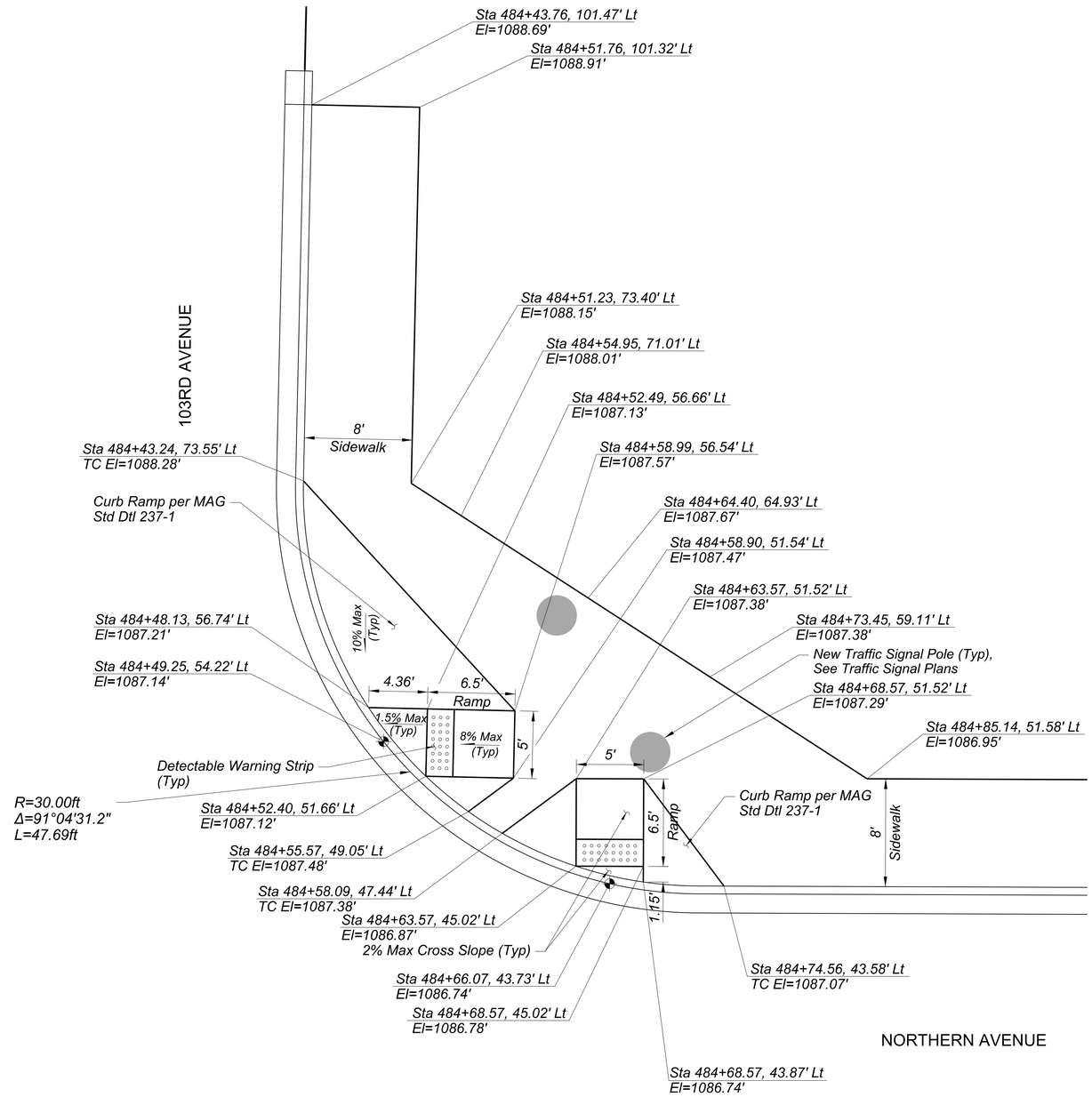

SCALE: Hor: 1"=5'
Vert: NA

5 0 5 10
SCALE IN FEET

Note:
Stations and offsets are referenced from the Northern Ave Construction ℄

Ramp Control Point

Contact Arizona 811 Two Working Days Before You Dig
Call 811 or Click Arizona811.com

NO.	REVISION	BY	DATE
3			
2			
1			

MARICOPA COUNTY

NORTHERN PARKWAY
103RD AVENUE TO 91ST AVENUE - PHASE 1
PROJECT NO. TT0372

	BY	DATE
DESIGNED	G. MCCAIG	05/2026
DRAWN	G. MCCAIG	05/2026
CHECKED	D. LENZER	05/2026

Registered Professional Engineer (Civil) CERTIFICATE NO. 79706 JAMES G. MCCAIG Date signed 05/08/26

BURGESS & NIPLE
1230 W. WASHINGTON ST. SUITE 511
TEMPE, AZ 85288

SIDEWALK RAMP DETAIL

SHEET RD01

TRACS NO.

pw://tyli-pw.bentley.com:tyli-pw-01/Documents/Projects/2219991.00_TT0372/600_CADD/05_Official/Dgn_PHASE 1/Sheets/B&N/TT0372_SD_PedRamps_00a.dgn 11:05:11 AM5/8/2026

F.H.W.A. REGION	STATE	PROJECT NO.	SHEET NO.	TOTAL SHEETS	RECORD DRAWING
9	AZ	TT0372	36	224	

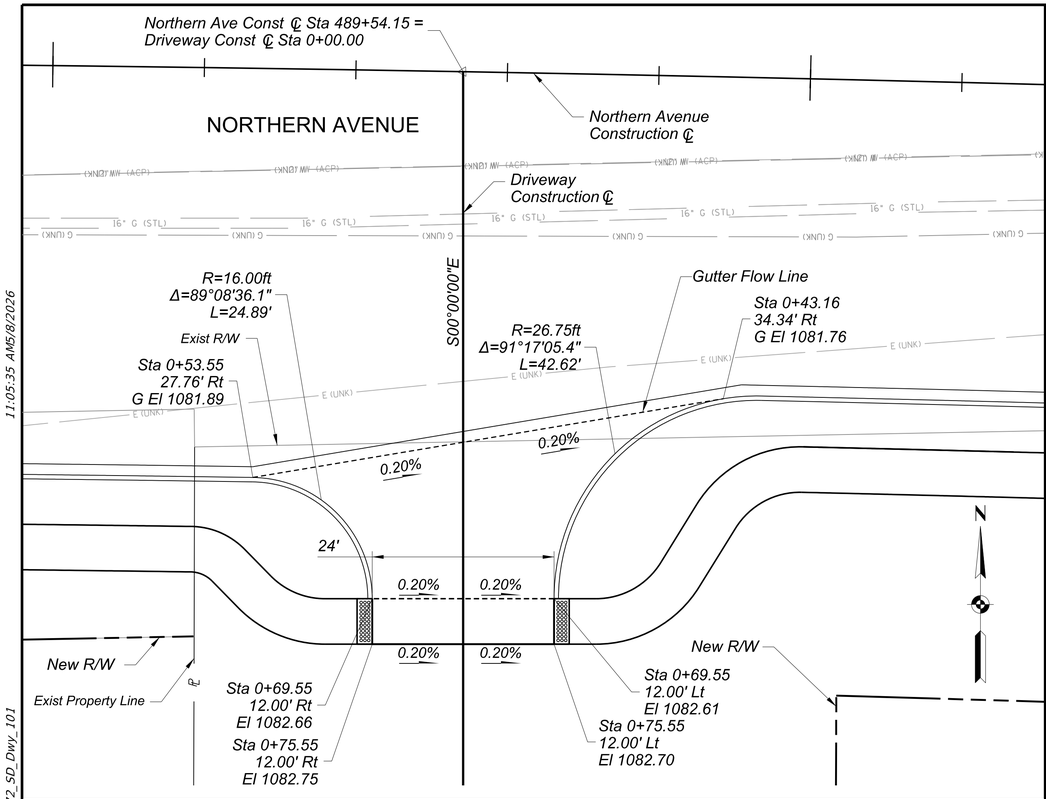

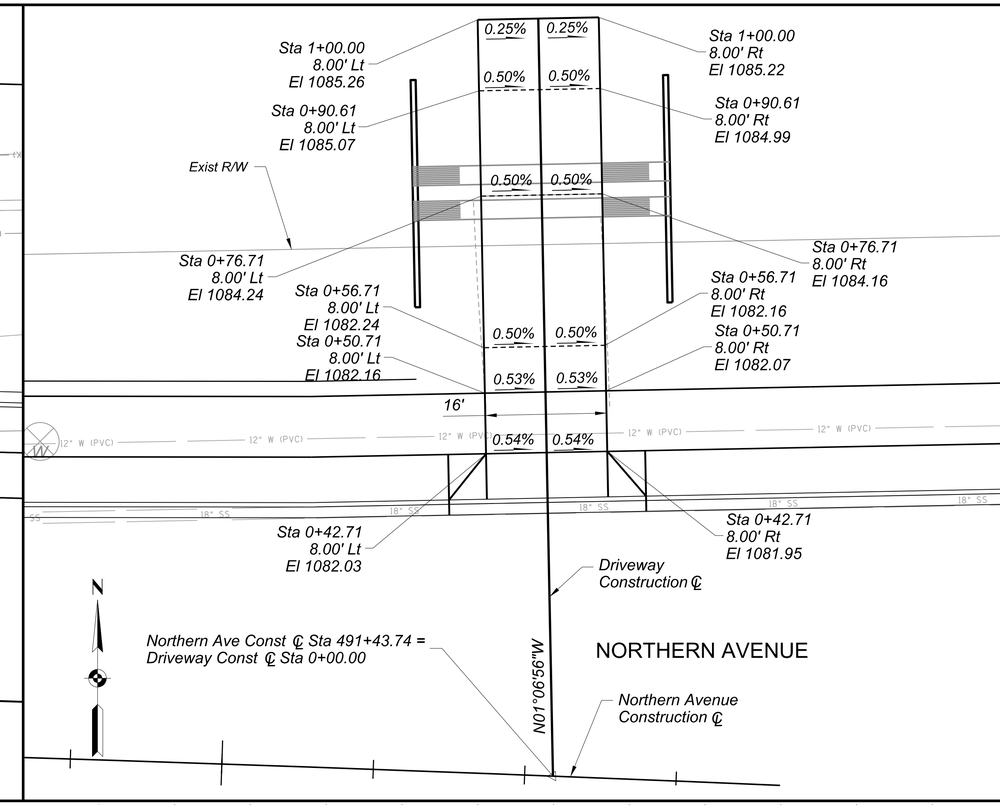

SCALE: Hor: 1"=10'
Vert: N/A
10 0 10 20
SCALE IN FEET

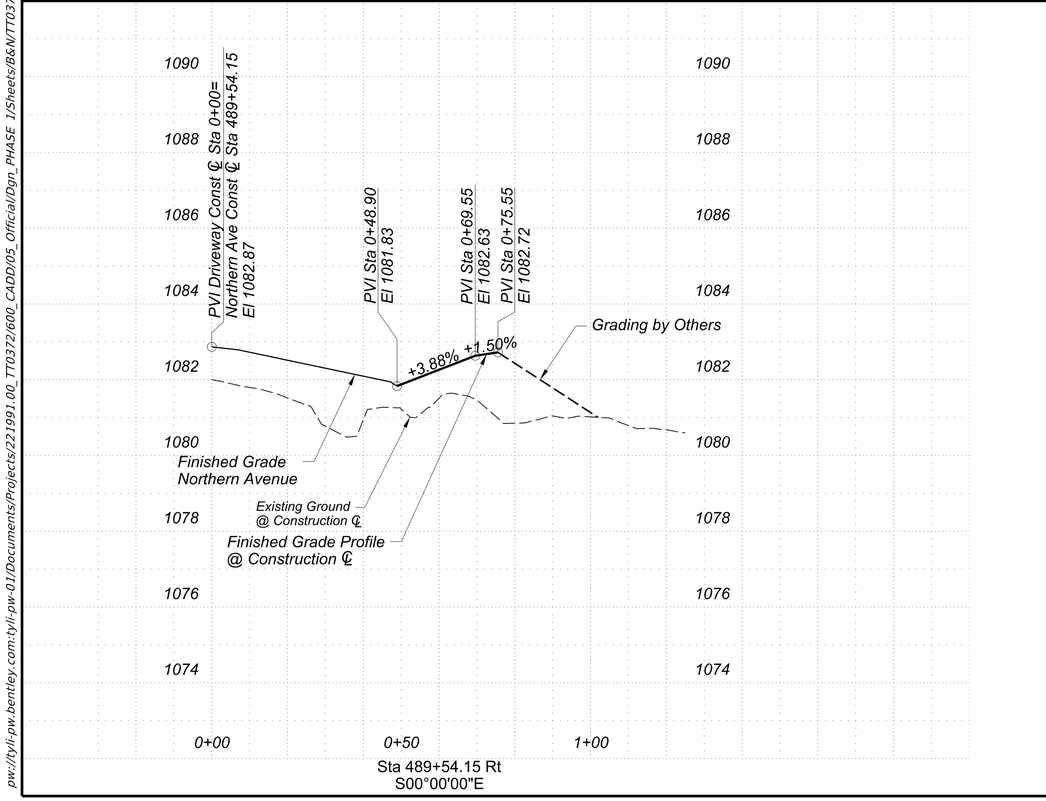

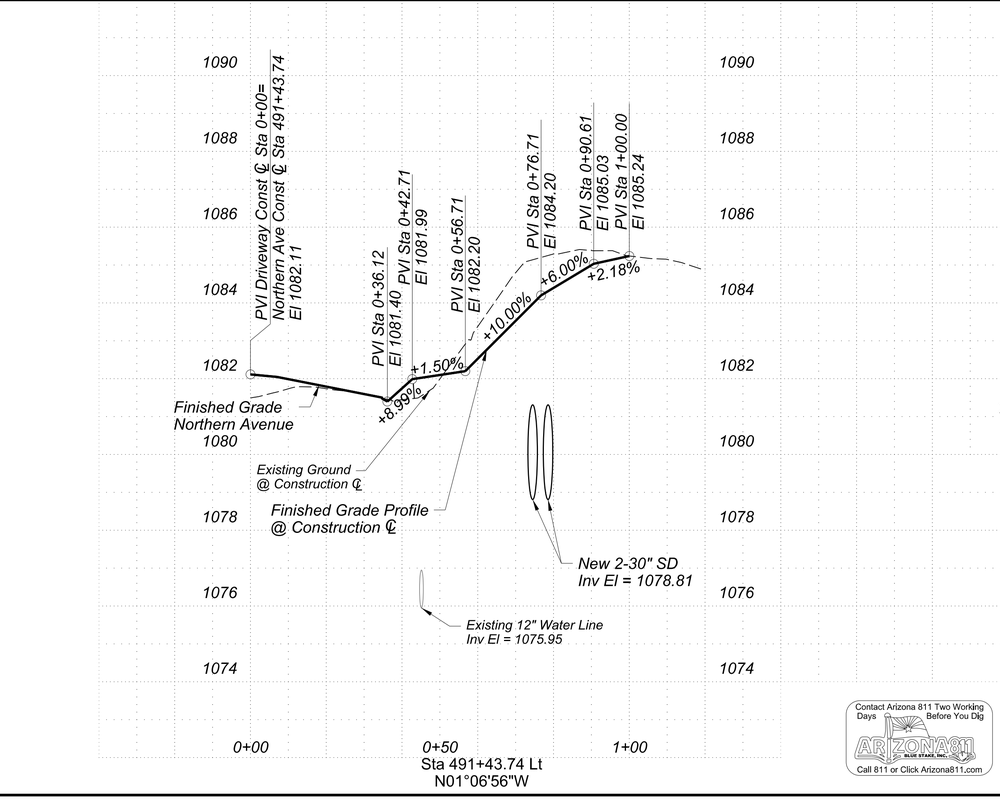

SCALE: Hor: 1"=20'
Vert: 1"=2'
20 0 20 40
SCALE IN FEET

Contact Arizona 811 Two Working Days Before You Dig
Call 811 or Click Arizona811.com

NO.	REVISION	BY	DATE
3			
2			
1			

MARICOPA COUNTY

NORTHERN PARKWAY
103RD AVENUE TO 91ST AVENUE - PHASE 1
PROJECT NO. TT0372

	BY	DATE
DESIGNED	G. MCCAIG	05/2026
DRAWN	C. STARK	05/2026
CHECKED	D. LENZER	05/2026

Registered Professional Engineer (Civil) CERTIFICATE NO. 79706 JAMES G. MCCAIG Date in 05/28/26

BURGESS & NIPLE
1230 W. WASHINGTON ST. SUITE 511
TEMPE, AZ 85288

DRIVEWAY PLAN AND PROFILE

SHEET RD02

TRACS NO.

pw://tyli-pw.bentley.com:tyli-pw-01/Documents/Projects/221991.00_TT0372/600_CADD/05_Official/Dgn_PHASE 1/Sheets/B&N/TT0372_SD_Dwy_101
11:05:35 AM5/8/2026

F.H.W.A. REGION	STATE	PROJECT NO.	SHEET NO.	TOTAL SHEETS	RECORD DRAWING
9	AZ	TT0372	37	224	

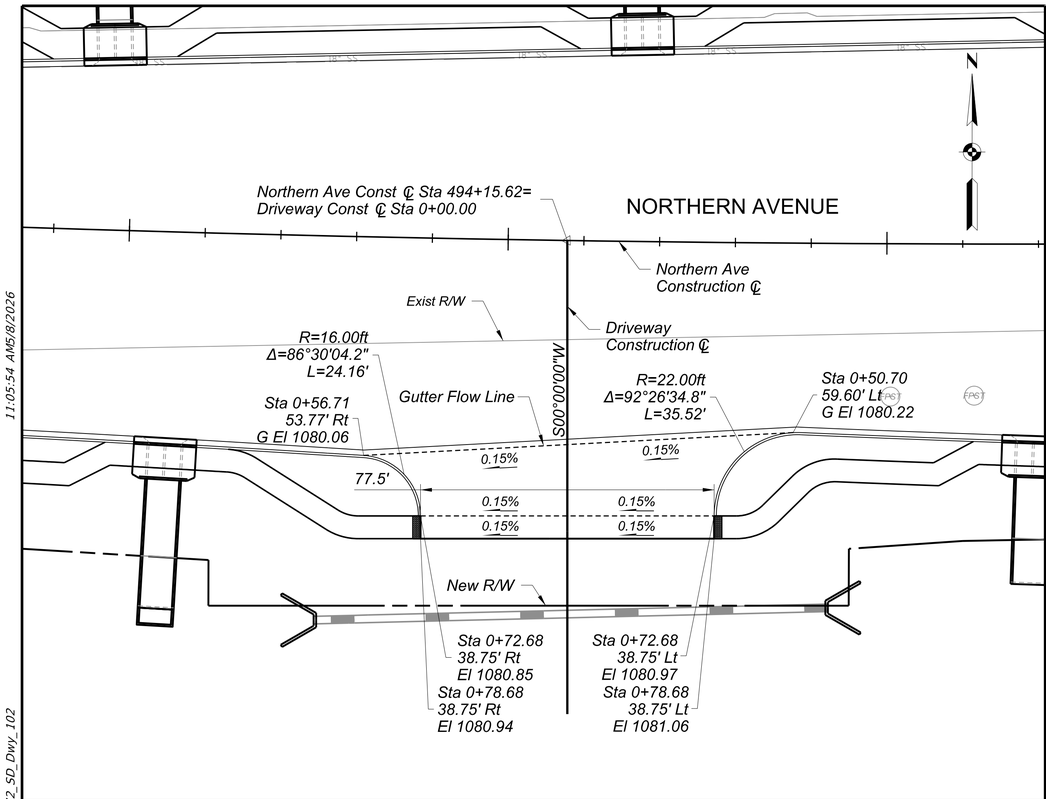

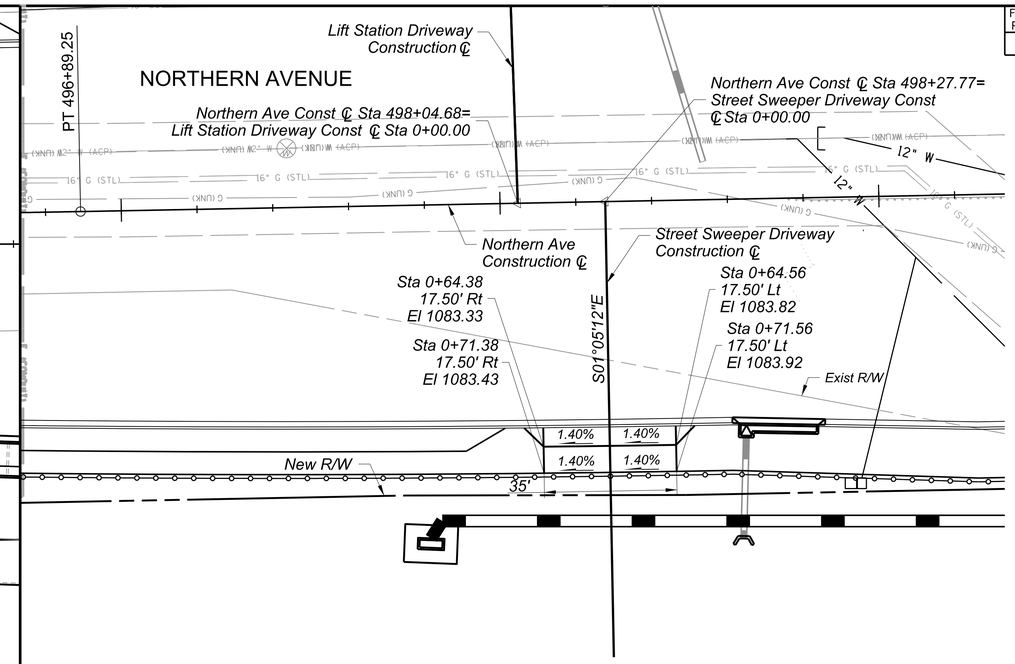

SCALE: Hor: 1"=20'
Vert: N/A
20 0 20 40
SCALE IN FEET

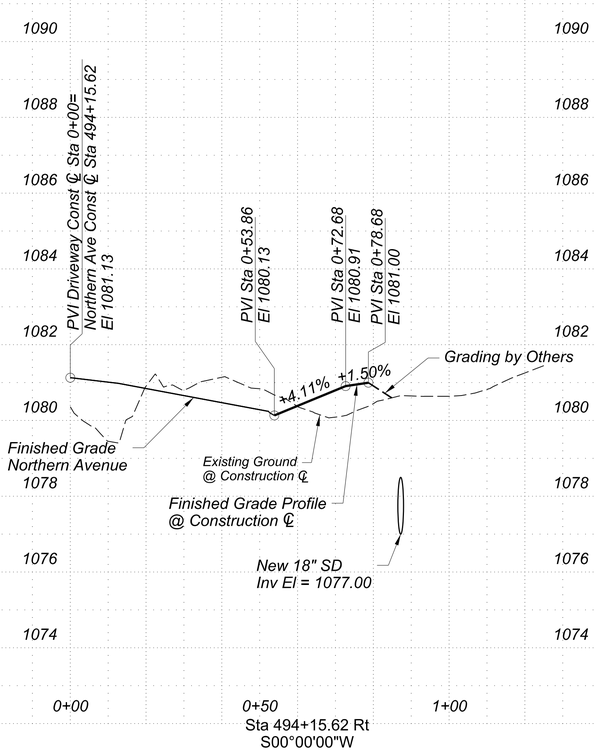

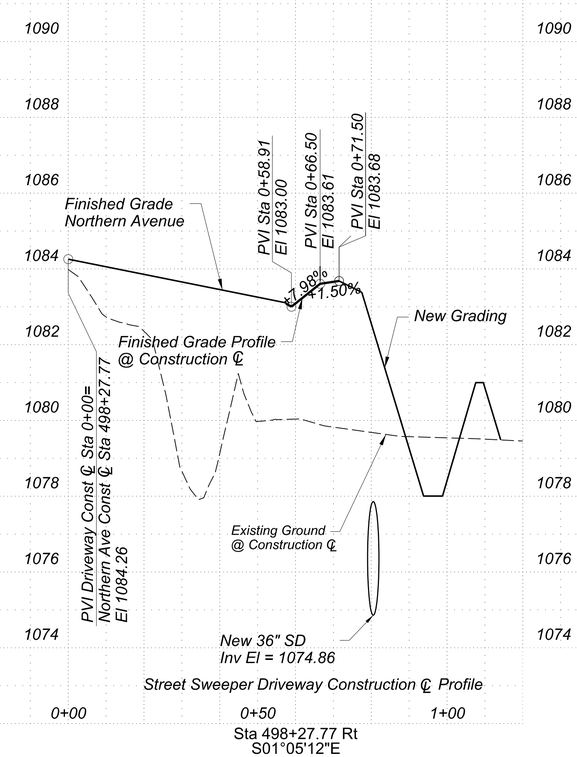

SCALE: Hor: 1"=20'
Vert: 1"=2'
20 0 20 40
SCALE IN FEET

Contact Arizona 811 Two Working Days Before You Dig
ARIZONA811 BLUE STAKE, INC.
Call 811 or Click Arizona811.com

NO.	REVISION	BY	DATE
3			
2			
1			

MARICOPA COUNTY

NORTHERN PARKWAY
103RD AVENUE TO 91ST AVENUE - PHASE 1
PROJECT NO. TT0372

	BY	DATE
DESIGNED	G. MCCAIG	05/2026
DRAWN	C. STARK	05/2026
CHECKED	D. LENZER	05/2026

Registered Professional Engineer (Civil) CERTIFICATE NO. 79706 JAMES G. MCCAIG Date Signed 05/08/26

BURGESS & NIPLE
1230 W. WASHINGTON ST. SUITE 511
TEMPE, AZ 85288

DRIVEWAY PLAN AND PROFILE

SHEET RD03

TRACS NO.

pw://tyli-pw.bentley.com:tyli-pw-01/Documents/Projects/221991.00_TT0372/600_CADD/05_Official/Dgn_PHASE 1/Sheets/B&N/TT0372_SD_Dwy_102
11:05:54 AM5/8/2026

F.H.W.A. REGION	STATE	PROJECT NO.	SHEET NO.	TOTAL SHEETS	RECORD DRAWING
9	AZ	TT0372	38	224	

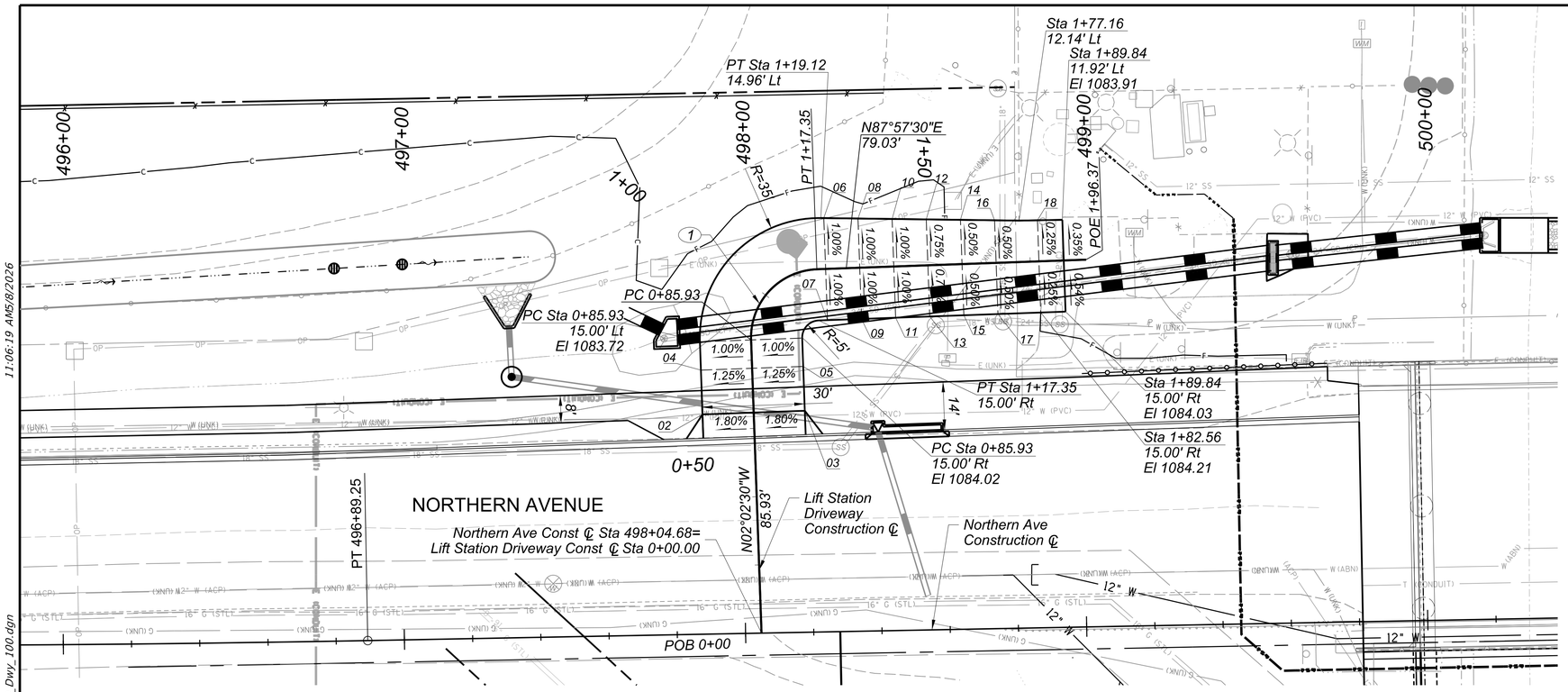

Driveway Pavement Elevations

2: Sta 0+64.64, 15.00' Lt
P=1083.55'
3: Sta 0+64.64, 15.00' Rt
P=1084.09'
4: Sta 0+77.63, 15.00' Lt
P=1083.82'
5: Sta 0+77.63, 15.00' Rt
P=1084.20
6: Sta 1+20.00, 14.92' Lt
P=1083.09'
7: Sta 1+20.00, 15.00' Rt
P=1083.39'
8: Sta 1+30.00, 14.43' Lt
P=1082.65'
9: Sta 1+30.00, 15.00' Rt
P=1082.95'
10: Sta 1+40.00, 13.95' Lt
P=1082.59'
11: Sta 1+40.00, 15.00' Rt
P=1082.88'
12: Sta 1+50.00, 13.46' Lt
P=1082.83'
13: Sta 1+50.00, 15.00' Rt
P=1083.04'
14: Sta 1+60.00, 12.97' Lt
P=1083.36'
15: Sta 1+60.00, 15.00' Rt
P=1083.50'
16: Sta 1+70.00, 12.49' Lt
P=1083.97'
17: Sta 1+70.00, 15.00' Rt
P=1084.10'
18: Sta 1+82.56, 12.05' Lt
P=1084.15'

Note: All stations and offsets are referenced from the Lift Station Drive ℄

See Sheets DR03 & DR04 for Drainage Details

(1)
CURVE DATA
PI Sta 1+05.93
Δ 89°59'59.3" Rt
D 286°28'46.09"
T 20.00'
L 31.42'
R 20.00'

SCALE: Hor: 1"=20'
Vert: N/A
20 0 20 40
SCALE IN FEET

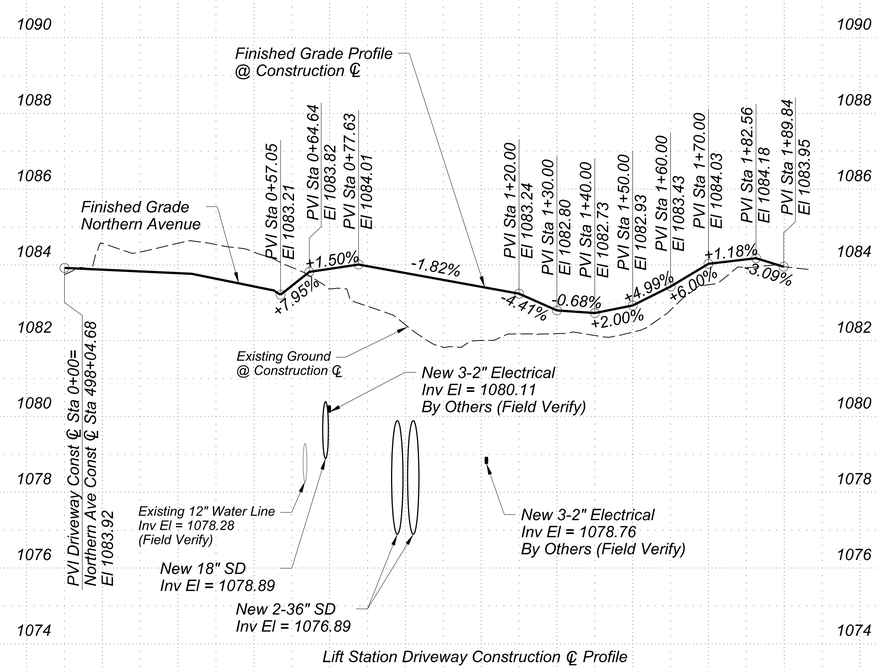

Lift Station Driveway Construction ℄ Profile

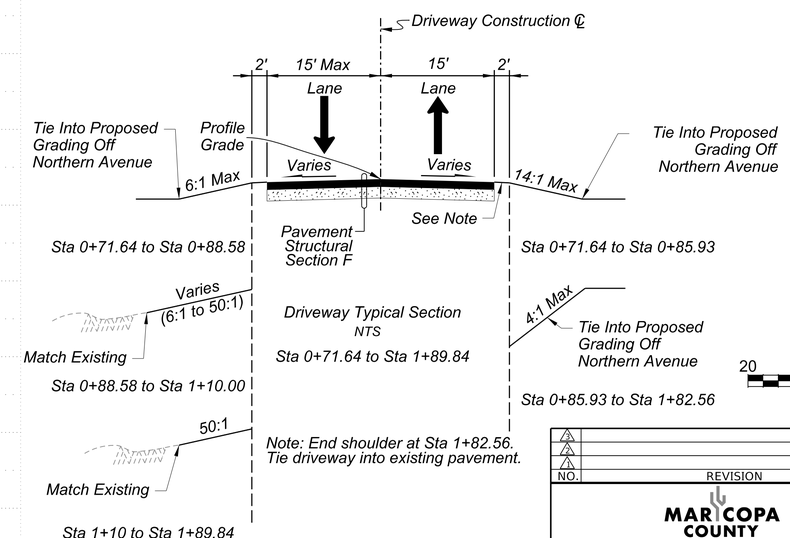

SCALE: Hor: 1"=20'
Vert: 1"=2'
20 0 20 40
SCALE IN FEET

NO.	REVISION	BY	DATE
3			
2			
1			

MARICOPA COUNTY

NORTHERN PARKWAY
103RD AVENUE TO 91ST AVENUE - PHASE 1
PROJECT NO. TT0372

	BY	DATE
DESIGNED	G. MCCAIG	05/2026
DRAWN	G. MCCAIG	05/2026
CHECKED	D. LENZER	05/2026

Registered Professional Engineer (Civil) CERTIFICATE NO. 79706 JAMES G. MCCAIG Date in 05/08/26

BURGESS & NIPLE
1230 W. WASHINGTON ST. SUITE 511
TEMPE, AZ 85288

Contact Arizona 811 Two Working Days Before You Dig
ARIZONA811 BLUE STAKE, INC.
Call 811 or Click Arizona811.com

DRIVEWAY PLAN AND PROFILE

SHEET RD04

TRACS NO.

11:06:19 AM5/8/2026

pw://tyli-pw.bentley.com:tyli-pw-01/Documents/Projects/221991.00_TT0372/600_CADD/05_Official/Dgn_PHASE 1/Sheets/B&N/TT0372_SD_Dwy_100.dgn

F.H.W.A. REGION	STATE	PROJECT NO.	SHEET NO.	TOTAL SHEETS	RECORD DRAWING
9	AZ	TT0372	39	224	

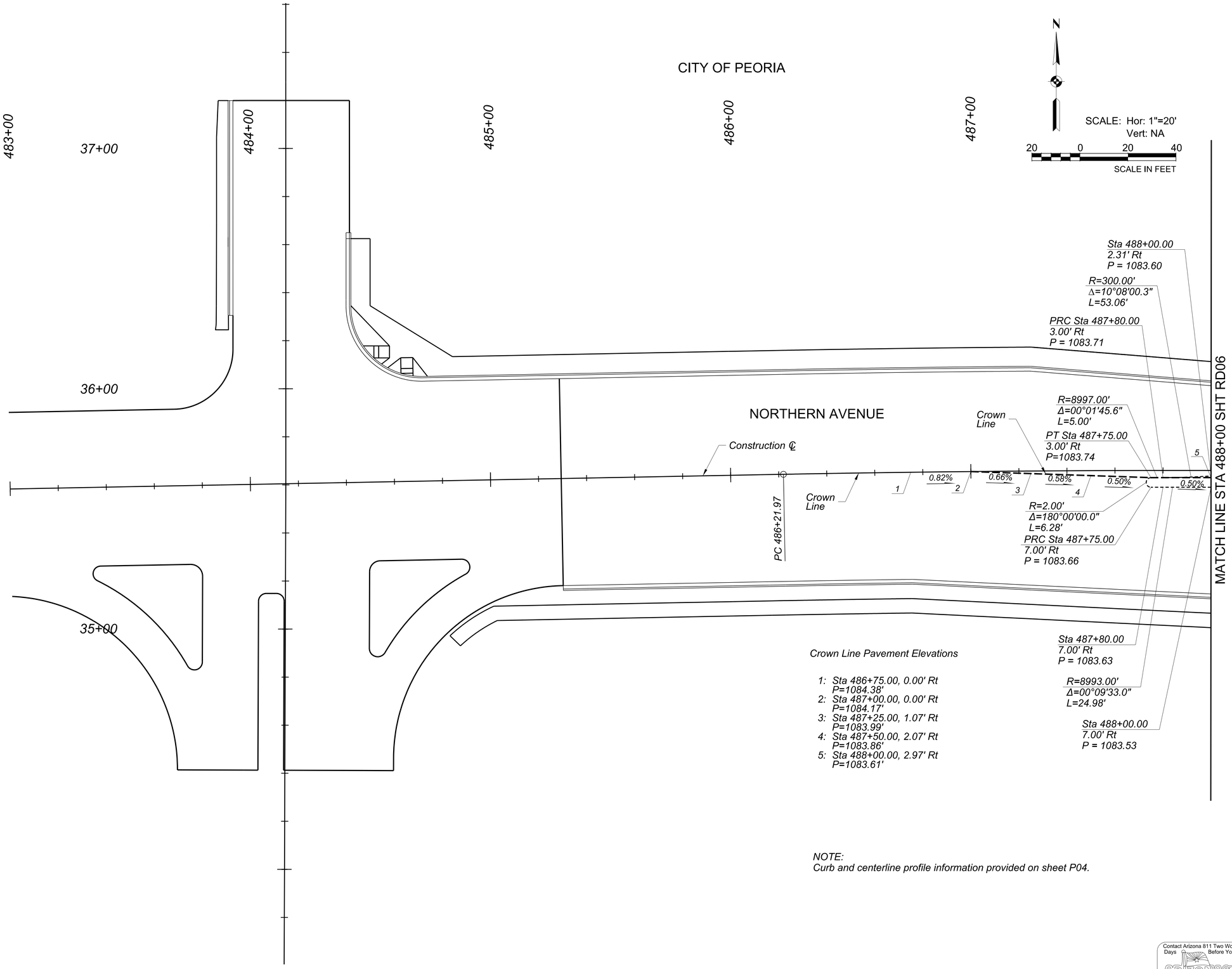

Crown Line Pavement Elevations

1: Sta 486+75.00, 0.00' Rt
P=1084.38'
2: Sta 487+00.00, 0.00' Rt
P=1084.17'
3: Sta 487+25.00, 1.07' Rt
P=1083.99'
4: Sta 487+50.00, 2.07' Rt
P=1083.86'
5: Sta 488+00.00, 2.97' Rt
P=1083.61'

NOTE:
Curb and centerline profile information provided on sheet P04.

Contact Arizona 811 Two Working Days Before You Dig
ARIZONA811 BLUE STAKE, INC.
Call 811 or Click Arizona811.com

NO.	REVISION	BY	DATE
3			
2			
1			

MARICOPA COUNTY

NORTHERN PARKWAY
103RD AVENUE TO 91ST AVENUE - PHASE 1
PROJECT NO. TT0372

	BY	DATE
DESIGNED	G. MCCAIG	05/2026
DRAWN	G. MCCAIG	05/2026
CHECKED	D. LENZER	05/2026

Registered Professional Engineer (Civil) CERTIFICATE NO. 79706 JAMES G. MCCAIG Date Signed 05/08/26

BURGESS & NIPLE
1230 W. WASHINGTON ST. SUITE 511
TEMPE, AZ 85288

CROWN AND CROSS SLOPE DETAIL

SHEET RD05

TRACS NO.

pw://tyli-pw.bentley.com:tyli-pw-01/Documents/Projects/2221991.00_TT0372/600_CADD/05_Official/Dgn_PHASE 1/Sheets/B&N/TT0372_SC_Median_Detail_00A.dgn 11:06:39 AM5/8/2026

F.H.W.A. REGION	STATE	PROJECT NO.	SHEET NO.	TOTAL SHEETS	RECORD DRAWING
9	AZ	TT0372	40	224	

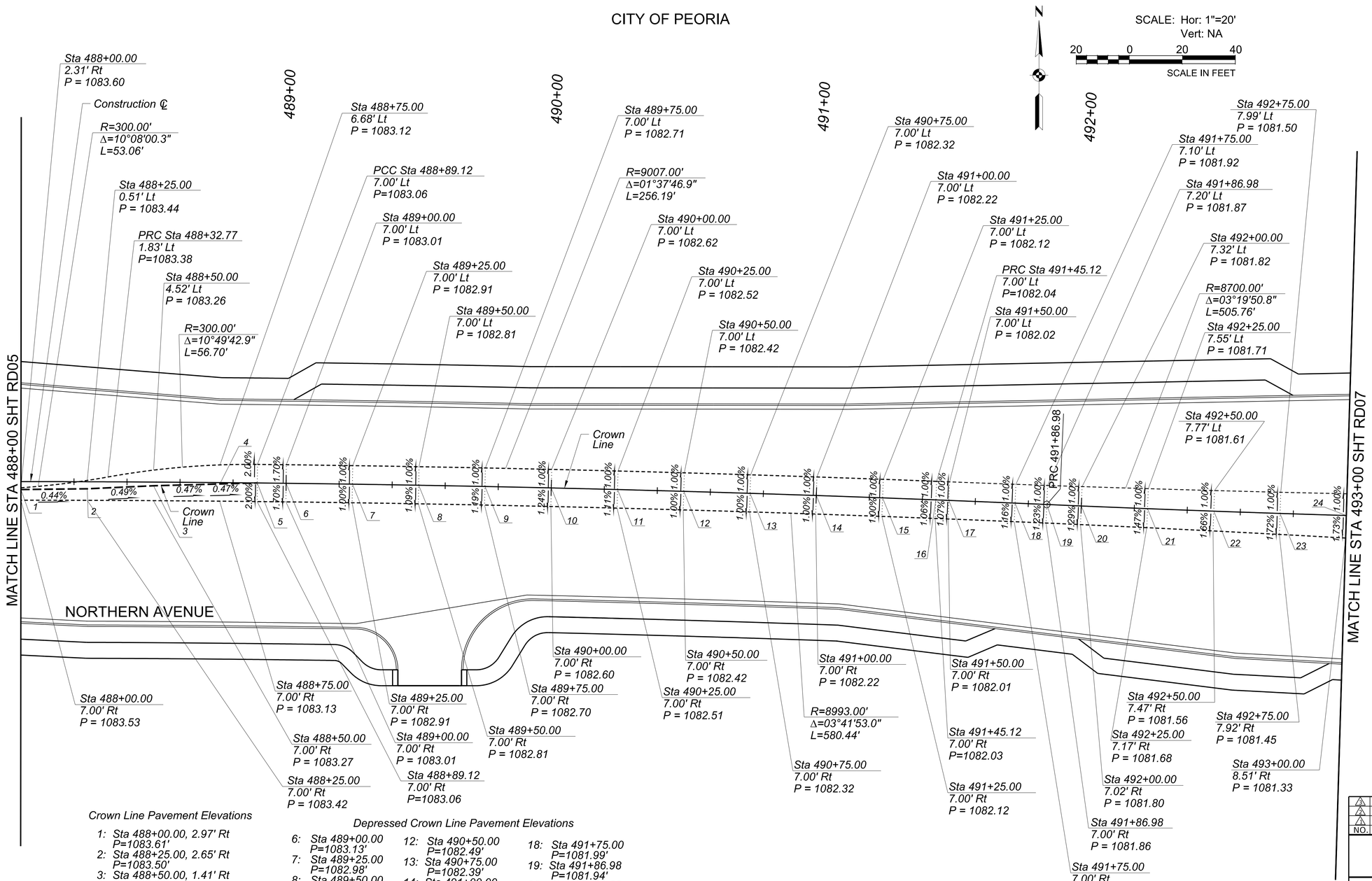

Crown Line Pavement Elevations

1: Sta 488+00.00, 2.97' Rt
P=1083.61'
2: Sta 488+25.00, 2.65' Rt
P=1083.50'
3: Sta 488+50.00, 1.41' Rt
P=1083.38'
4: Sta 488+75.00, 0.53' Rt
P=1083.26'
5: Sta 488+89.12, 0.00' Rt
P=1083.19'

Depressed Crown Line Pavement Elevations

6: Sta 489+00.00
P=1083.13'
7: Sta 489+25.00
P=1082.98'
8: Sta 489+50.00
P=1082.88'
9: Sta 489+75.00
P=1082.78'
10: Sta 490+00.00
P=1082.69'
11: Sta 490+25.00
P=1082.59'
12: Sta 490+50.00
P=1082.49'
13: Sta 490+75.00
P=1082.39'
14: Sta 491+00.00
P=1082.29'
15: Sta 491+25.00
P=1082.19'
16: Sta 491+45.12
P=1082.11'
17: Sta 491+50.00
P=1082.09'
18: Sta 491+75.00
P=1081.99'
19: Sta 491+86.98
P=1081.94'
20: Sta 492+00.00
P=1081.89'
21: Sta 492+25.00
P=1081.79'
22: Sta 492+50.00
P=1081.69'
23: Sta 492+75.00
P=1081.58'
24: Sta 493+00.00
P=1081.48'

NOTE:
Curb and centerline profile information provided on sheet P06.

Contact Arizona 811 Two Working Days Before You Dig
Call 811 or Click Arizona811.com

NO.	REVISION	BY	DATE
3			
2			
1			

MARICOPA COUNTY

NORTHERN PARKWAY
103RD AVENUE TO 91ST AVENUE - PHASE 1
PROJECT NO. TT0372

	BY	DATE
DESIGNED	G. MCCAIG	05/2026
DRAWN	G. MCCAIG	05/2026
CHECKED	D. LENZER	05/2026

Registered Professional Engineer (Civil) CERTIFICATE NO. 79706 JAMES G. MCCAIG Date Signed 05/08/26

BURGESS & NIPLE
1230 W. WASHINGTON ST. SUITE 511
TEMPE, AZ 85288

CROWN AND CROSS SLOPE DETAIL

SHEET RD06

TRACS NO.

pw://tyli-pw.bentley.com:tyli-pw-01/Documents/Projects/221991.00_TT0372/600_CADD/05_Official/Dgn_PHASE 1/Sheets/B&N/TT0372_SC_Median_Detail_00B.dgn 11:07:04 AM5/8/2026

F.H.W.A. REGION	STATE	PROJECT NO.	SHEET NO.	TOTAL SHEETS	RECORD DRAWING
9	AZ	TT0372	41	224	

CITY OF PEORIA

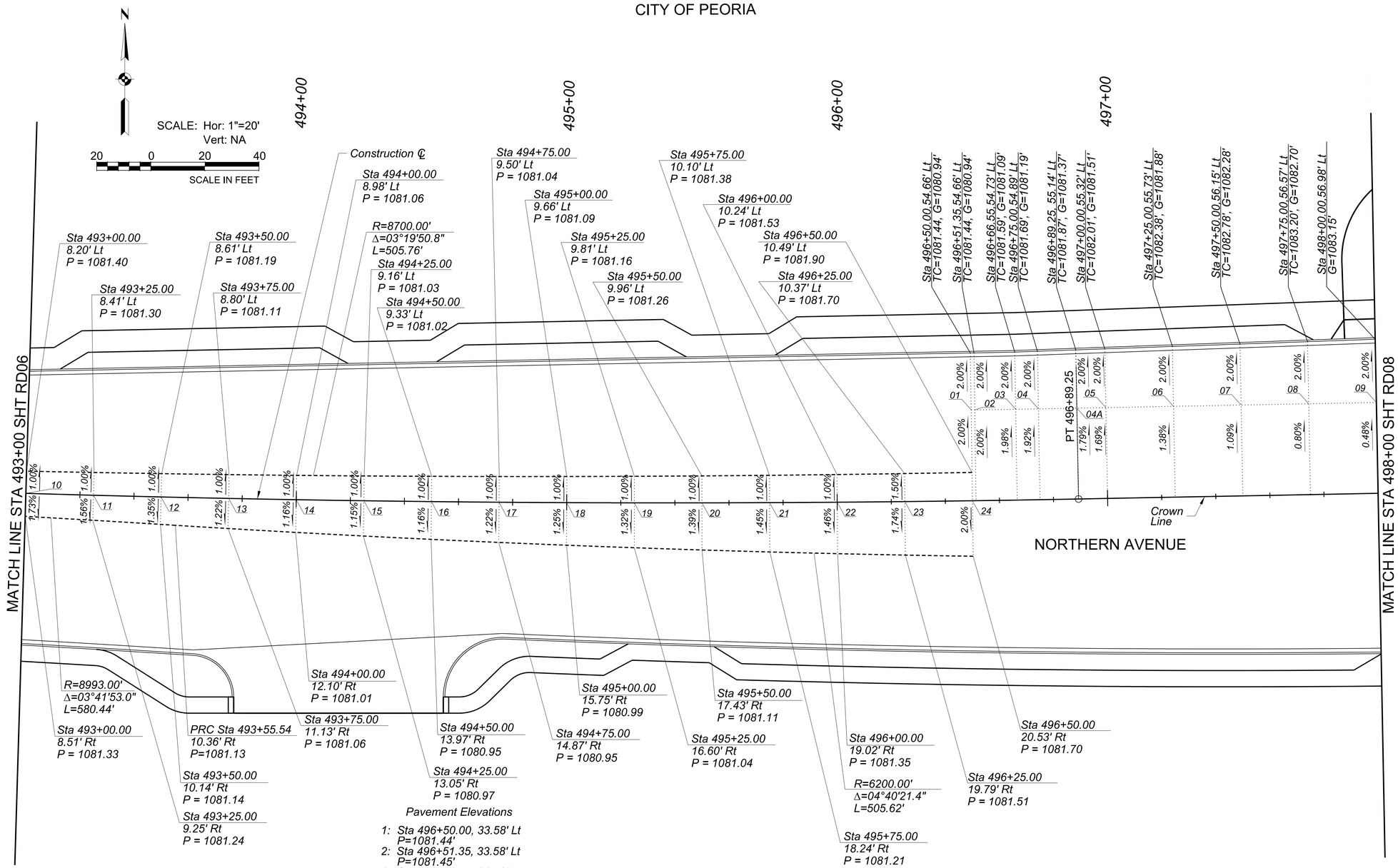

Pavement Elevations

1: Sta 496+50.00, 33.58' Lt P=1081.44'
2: Sta 496+51.35, 33.58' Lt P=1081.45'
3: Sta 496+66.55, 33.58' Lt P=1081.59'
4: Sta 496+75.00, 33.58' Lt P=1081.69'
4A: Sta 496+89.25, 33.58' Lt P=1081.87'
5: Sta 497+00.00, 33.58' Lt P=1082.02'
6: Sta 497+25.00, 33.58' Lt P=1082.40'
7: Sta 497+50.00, 33.58' Lt P=1082.80'
8: Sta 497+75.00, 33.58' Lt P=1083.23'
9: Sta 498+00.00, 33.58' Lt P=1083.71'

Depressed Crown Line Pavement Elevations

10: Sta 493+00.00 P=1081.48'
11: Sta 493+25.00 P=1081.38'
12: Sta 493+50.00 P=1081.28'
13: Sta 493+75.00 P=1081.20'
14: Sta 494+00.00 P=1081.15'
15: Sta 494+25.00 P=1081.12'
16: Sta 494+50.00 P=1081.11'
17: Sta 494+75.00 P=1081.14'
18: Sta 495+00.00 P=1081.18'
19: Sta 495+25.00 P=1081.26'
20: Sta 495+50.00 P=1081.36'
21: Sta 495+75.00 P=1081.48'
22: Sta 496+00.00 P=1081.63'
23: Sta 496+25.00 P=1081.85'
24: Sta 496+50.00 P=1082.11'

NOTE:
Curb and centerline profile information provided on sheet P08.

Contact Arizona 811 Two Working Days Before You Dig
ARIZONA811 BLUE STAKE, INC.
Call 811 or Click Arizona811.com

NO.	REVISION	BY	DATE
3			
2			
1			

MARICOPA COUNTY

NORTHERN PARKWAY
103RD AVENUE TO 91ST AVENUE - PHASE 1
PROJECT NO. TT0372

	BY	DATE
DESIGNED	G. MCCAIG	05/2026
DRAWN	G. MCCAIG	05/2026
CHECKED	D. LENZER	05/2026

Registered Professional Engineer (Civil) CERTIFICATE NO. 79706 JAMES G. MCCAIG Date 05/08/26

BURGESS & NIPLE
1230 W. WASHINGTON ST. SUITE 511
TEMPE, AZ 85288

CROWN AND CROSS SLOPE DETAIL

SHEET RD07

TRACS NO.

pw://tyli-pw.bentley.com:tyli-pw-01/Documents/Projects/221991.00_TT0372/600_CADD/05_Official/Dgn_PHASE 1/Sheets/B&N/TT0372_SC_Median_Detail_00C.dgn 11:07:22 AM5/8/2026

F.H.W.A. REGION	STATE	PROJECT NO.	SHEET NO.	TOTAL SHEETS	RECORD DRAWING
9	AZ	TT0372	42	224	

CITY OF PEORIA

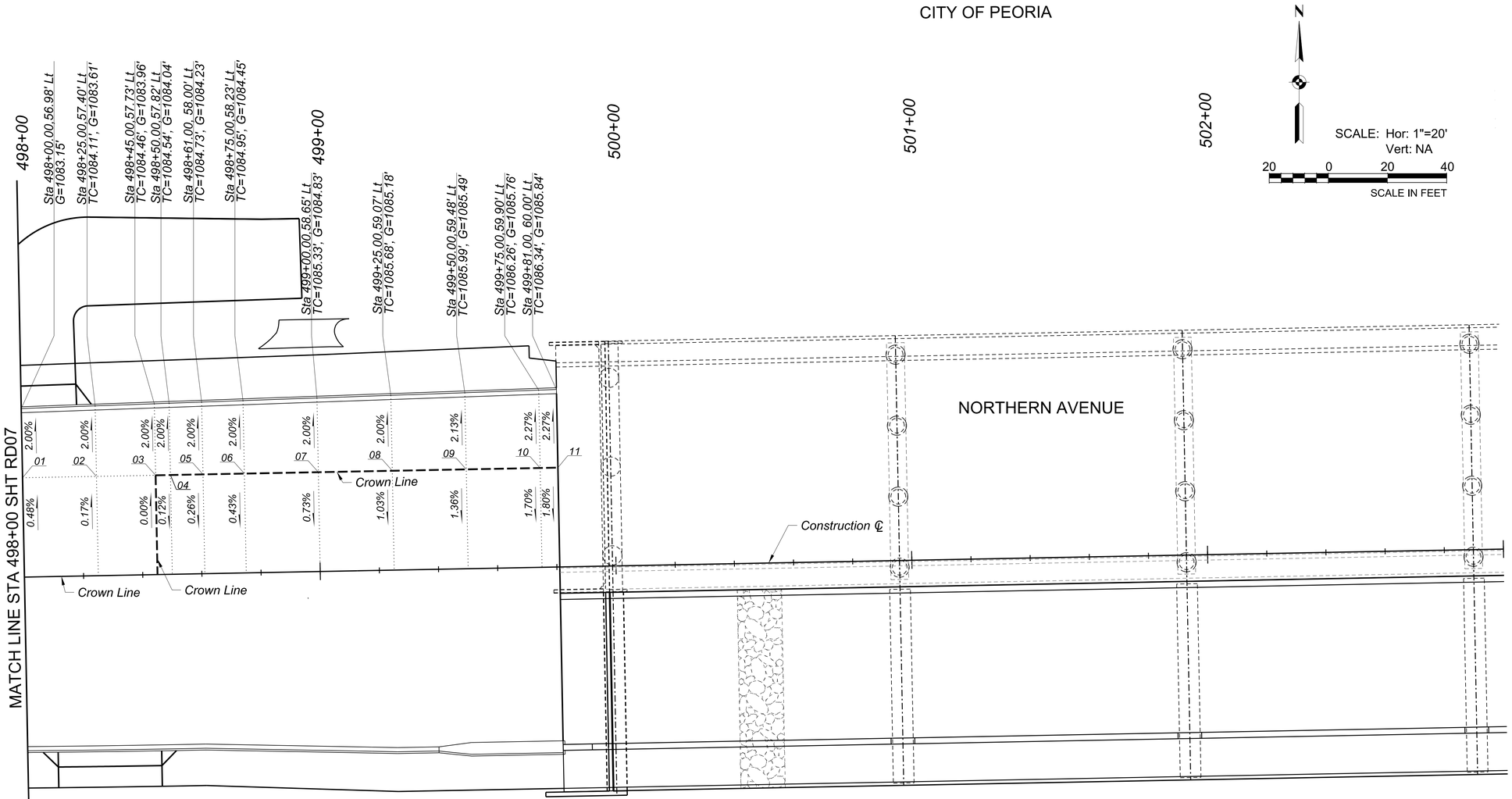

Pavement Elevations

1: Sta 498+00.00, 33.58' Lt
P=1083.71'
2: Sta 498+25.00, 33.58' Lt
P=1084.16'
3: Sta 498+45.00, 33.58' Lt
P=1084.52'
4: Sta 498+50.00, 33.58' Lt
P=1084.60'
5: Sta 498+61.00, 33.58' Lt
P=1084.79
6: Sta 498+75.00, 33.58' Lt
P=1085.02'
7: Sta 499+00.00, 33.58' Lt
P=1085.41'
8: Sta 499+25.00, 33.58' Lt
P=1085.77'
9: Sta 499+50.00, 33.58' Lt
P=1086.11'
10: Sta 499+75.00, 33.58' Lt
P=1086.43'
11: Sta 499+81.00, 33.58' Lt
P=1086.51'

NOTE:
Curb and centerline profile information provided on sheet P10.

Contact Arizona 811 Two Working Days Before You Dig
ARIZONA811 BLUE STAKE, INC.
Call 811 or Click Arizona811.com

NO.	REVISION	BY	DATE
3			
2			
1			

MARICOPA COUNTY

NORTHERN PARKWAY
103RD AVENUE TO 91ST AVENUE - PHASE 1
PROJECT NO. TT0372

	BY	DATE
DESIGNED	G. MCCAIG	05/2026
DRAWN	G. MCCAIG	05/2026
CHECKED	D. LENZER	05/2026

Registered Professional Engineer (Civil) CERTIFICATE NO. 79706 JAMES G. MCCAIG Date in: 05/08/26

BURGESS & NIPLE
1230 W. WASHINGTON ST. SUITE 511
TEMPE, AZ 85288

CROWN AND CROSS SLOPE DETAIL

SHEET RD08

TRACS NO.

pw://tyli-pw.bentley.com:tyli-pw-01/Documents/Projects/221991_00_TT0372/600_CADD/05_Official/Dgn_PHASE 1/Sheets/B&N/TT0372_SC_Median_Detail_00D.dgn 11:07:42 AM5/8/2026

F.H.W.A. REGION	STATE	PROJECT NO.	SHEET NO.	TOTAL SHEETS	RECORD DRAWING
9	AZ	TT0372	43	224	

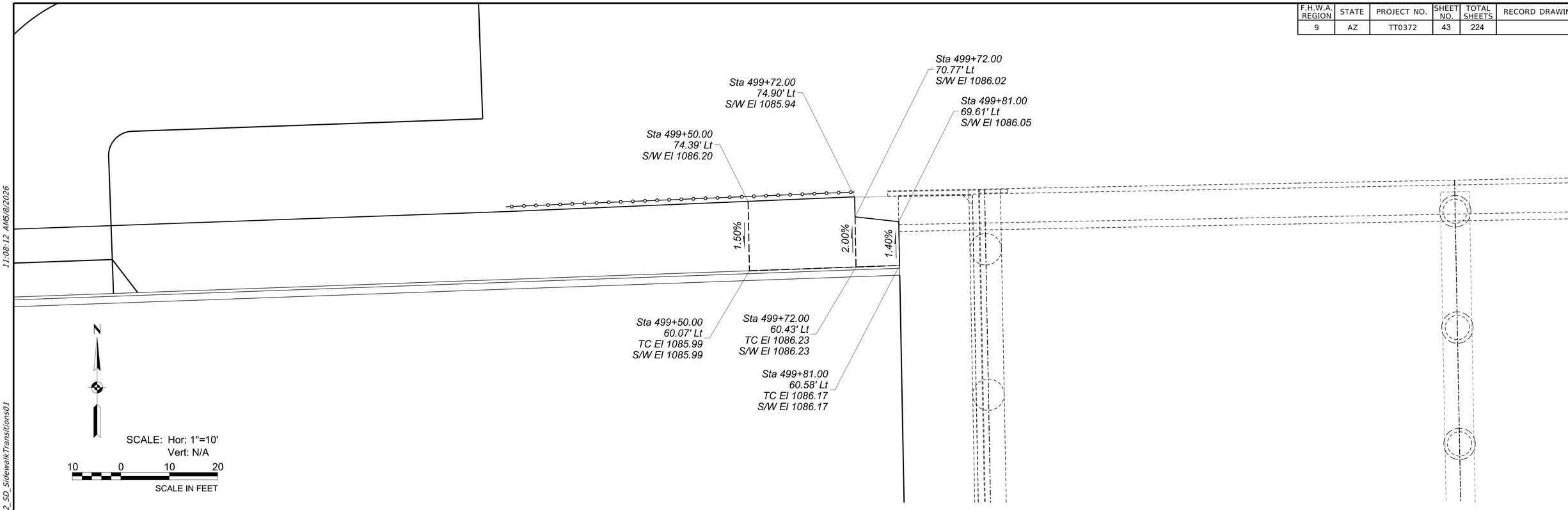

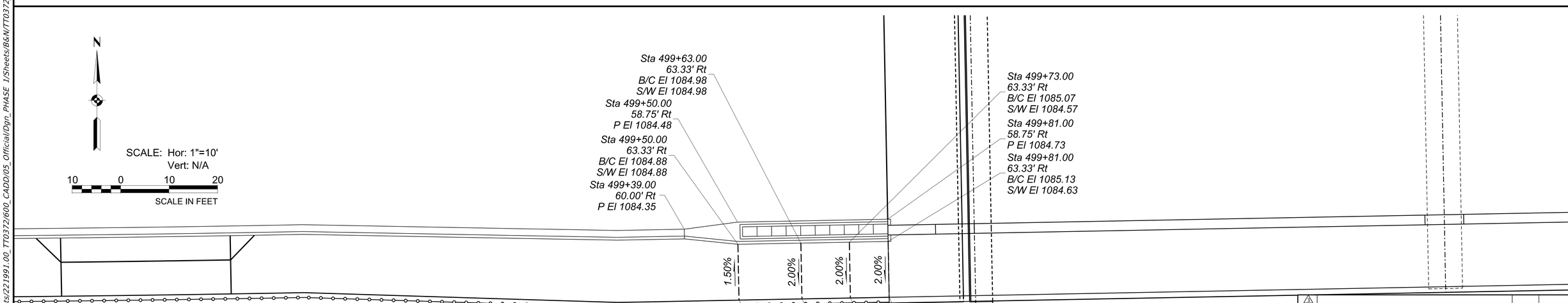

NOTE:
Stations and Offsets are from Northern Avenue Construction Centerline unless noted otherwise.

Contact Arizona 811 Two Working Days Before You Dig
ARIZONA811 BLUE STAKE, INC.
Call 811 or Click Arizona811.com

NO.	REVISION	BY	DATE
3			
2			
1			

MARICOPA COUNTY

NORTHERN PARKWAY
103RD AVENUE TO 91ST AVENUE - PHASE 1
PROJECT NO. TT0372

Registered Professional Engineer (Civil) CERTIFICATE NO. 79706 JAMES G. MCCAIG Date Signed 05/08/26

	BY	DATE
DESIGNED	G. MCCAIG	05/2026
DRAWN	C. STARK	05/2026
CHECKED	D. LENZER	05/2026

BURGESS & NIPLE
1230 W. WASHINGTON ST. SUITE 511
TEMPE, AZ 85288

SIDEWALK TRANSITION DETAIL

SHEET RD09

TRACS NO.

11:08:12 AM5/8/2026
pw://tyli-pw.bentley.com:tyli-pw-01/Documents/Projects/221991.00_TT0372/600_CADD/05_Official/Dgn_PHASE 1/Sheets/B&N/TT0372_SD_SidewalkTransitions01

F.H.W.A. REGION	STATE	PROJECT NO.	SHEET NO.	TOTAL SHEETS	RECORD DRAWING
9	AZ	TT0372	44	224	

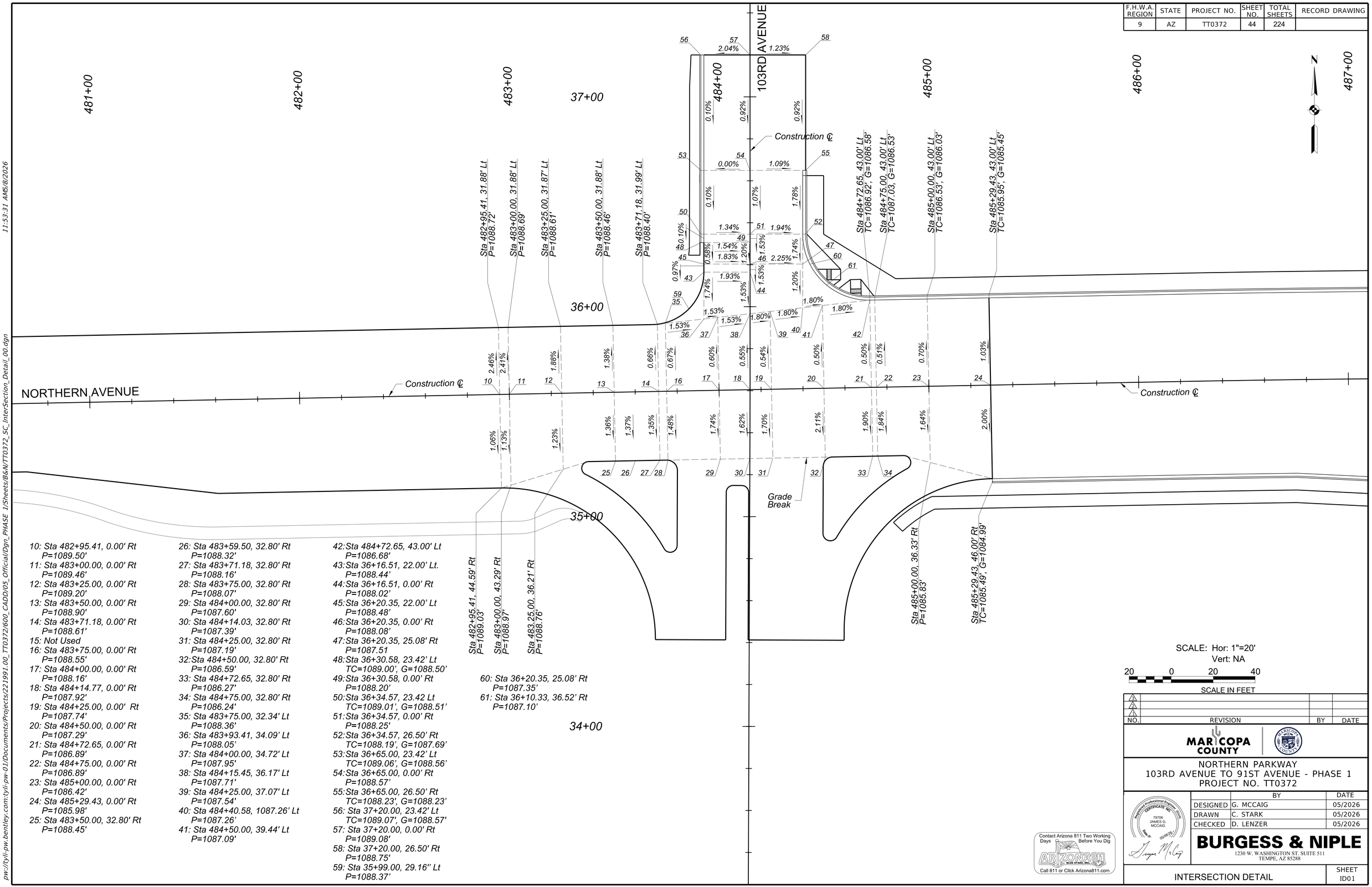

10: Sta 482+95.41, 0.00' Rt P=1089.50'
11: Sta 483+00.00, 0.00' Rt P=1089.46'
12: Sta 483+25.00, 0.00' Rt P=1089.20'
13: Sta 483+50.00, 0.00' Rt P=1088.90'
14: Sta 483+71.18, 0.00' Rt P=1088.61'
15: Not Used
16: Sta 483+75.00, 0.00' Rt P=1088.55'
17: Sta 484+00.00, 0.00' Rt P=1088.16'
18: Sta 484+14.77, 0.00' Rt P=1087.92'
19: Sta 484+25.00, 0.00' Rt P=1087.74'
20: Sta 484+50.00, 0.00' Rt P=1087.29'
21: Sta 484+72.65, 0.00' Rt P=1086.89'
22: Sta 484+75.00, 0.00' Rt P=1086.89'
23: Sta 485+00.00, 0.00' Rt P=1086.42'
24: Sta 485+29.43, 0.00' Rt P=1085.98'
25: Sta 483+50.00, 32.80' Rt P=1088.45'
26: Sta 483+59.50, 32.80' Rt P=1088.32'
27: Sta 483+71.18, 32.80' Rt P=1088.16'
28: Sta 483+75.00, 32.80' Rt P=1088.07'
29: Sta 484+00.00, 32.80' Rt P=1087.60'
30: Sta 484+14.03, 32.80' Rt P=1087.39'
31: Sta 484+25.00, 32.80' Rt P=1087.19'
32:Sta 484+50.00, 32.80' Rt P=1086.59'
33: Sta 484+72.65, 32.80' Rt P=1086.27'
34: Sta 484+75.00, 32.80' Rt P=1086.24'
35: Sta 483+75.00, 32.34' Lt P=1088.36'
36: Sta 483+93.41, 34.09' Lt P=1088.05'
37: Sta 484+00.00, 34.72' Lt P=1087.95'
38: Sta 484+15.45, 36.17' Lt P=1087.71'
39: Sta 484+25.00, 37.07' Lt P=1087.54'
40: Sta 484+40.58, 1087.26' Lt P=1087.26'
41: Sta 484+50.00, 39.44' Lt P=1087.09'
42:Sta 484+72.65, 43.00' Lt P=1086.68'
43:Sta 36+16.51, 22.00' Lt. P=1088.44'
44:Sta 36+16.51, 0.00' Rt P=1088.02'
45:Sta 36+20.35, 22.00' Lt P=1088.48'
46:Sta 36+20.35, 0.00' Rt P=1088.08'
47:Sta 36+20.35, 25.08' Rt P=1087.51
48:Sta 36+30.58, 23.42' Lt TC=1089.00', G=1088.50'
49:Sta 36+30.58, 0.00' Rt P=1088.20'
50:Sta 36+34.57, 23.42 Lt TC=1089.01', G=1088.51'
51:Sta 36+34.57, 0.00' Rt P=1088.25'
52:Sta 36+34.57, 26.50' Rt TC=1088.19', G=1087.69'
53:Sta 36+65.00, 23.42' Lt TC=1089.06', G=1088.56'
54:Sta 36+65.00, 0.00' Rt P=1088.57'
55:Sta 36+65.00, 26.50' Rt TC=1088.23', G=1088.23'
56: Sta 37+20.00, 23.42' Lt TC=1089.07', G=1088.57'
57: Sta 37+20.00, 0.00' Rt P=1089.08'
58: Sta 37+20.00, 26.50' Rt P=1088.75'
59: Sta 35+99.00, 29.16'' Lt P=1088.37'
60: Sta 36+20.35, 25.08' Rt P=1087.35'
61: Sta 36+10.33, 36.52' Rt P=1087.10'

SCALE: Hor: 1"=20'
Vert: NA
20 0 20 40
SCALE IN FEET

NO.	REVISION	BY	DATE
3			
2			
1			

MARICOPA COUNTY

NORTHERN PARKWAY
103RD AVENUE TO 91ST AVENUE - PHASE 1
PROJECT NO. TT0372

	BY	DATE
DESIGNED	G. MCCAIG	05/2026
DRAWN	C. STARK	05/2026
CHECKED	D. LENZER	05/2026

Registered Professional Engineer (Civil) CERTIFICATE NO. 79706 JAMES G. MCCAIG Date of Seal 05/08/26

BURGESS & NIPLE
1230 W. WASHINGTON ST. SUITE 511
TEMPE, AZ 85288

Contact Arizona 811 Two Working Days Before You Dig
ARIZONA811 BLUE STAKE, INC.
Call 811 or Click Arizona811.com

INTERSECTION DETAIL

SHEET ID01

TRACS NO.

pw://tyli-pw.bentley.com:tyli-pw-01/Documents/Projects/221991.00_TT0372/600_CADD/05_Official/Dgn_PHASE 1/Sheets/B&N/TT0372_SC_InterSection_Detail_00.dgn 11:53:31 AM5/8/2026

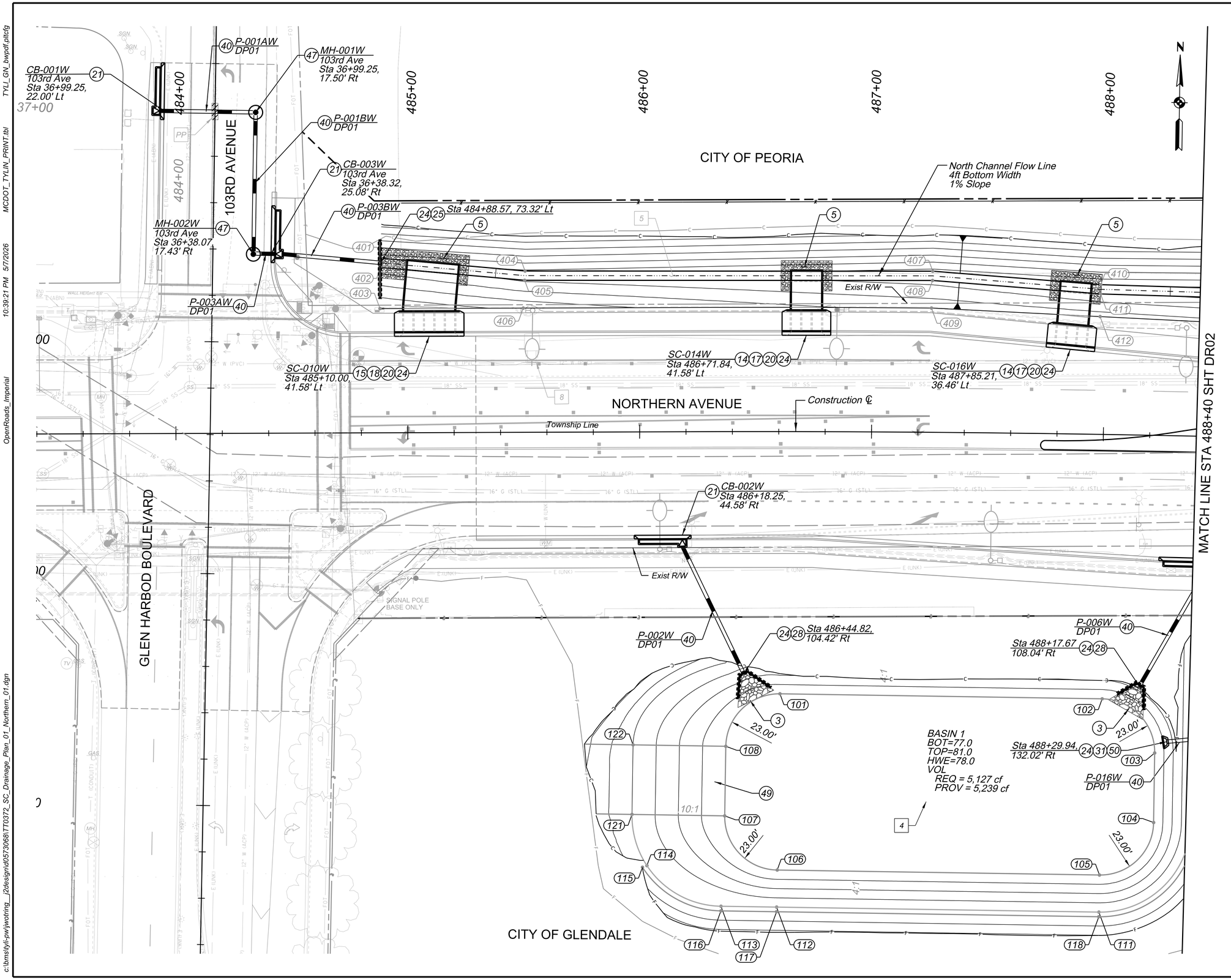

F.H.W.A. REGION	STATE	PROJECT NO.	SHEET NO.	TOTAL SHEETS	RECORD DRAWING
9	AZ	TT0372	45	224	

REMOVAL / RELOCATE

4	Earthwork for Retention Basins	5239 CY
5	Channel Excavation	1,680 CY
8	Remove Scupper	1 EA
PP	Pipe Protection per MAG Std Dtl 404, MAG Std Spec Section 610	

CONSTRUCTION

3	Riprap, D50=6in	8 CY
5	Riprap, D50=9 in	60 CY
14	Concrete Scupper, MAG Det 206, S/W=8 ft, 3-4 ft Curb Opening	2 EA
15	Concrete Scupper, MAG Det 206, S/W=8 ft, 5-4 ft Curb Opening	1 EA
17	Concrete Scupper Spillway, MAG Det OROW-510-2, 3-4 ft Curb Openings	36 LF
18	Concrete Scupper Spillway, MAG Det OROW-510-2, 5-4 ft Curb Openings	22 LF
20	Sediment Trap, MAG Det OROW-511	3 EA
21	Catch Basin, MAG Det 542-1, Type M-1, L=17 ft	3 EA
24	Safety Rail, Height 3 ft - 6 in, MAG Det 145	140 LF
25	Headwall, Det 5524, Straight Type, 18 in Pipe, Modified per Det D4 on Sht DT04	1 EA
28	Headwall, Det 5524, U Type, 18 in Pipe, Modified per Det D4 on Sht DT04	2 EA
31	Headwall, Drop Inlet, MAG Det 501-5, 18 in Pipe, Modified per Det D4 on Sht DT04	1 EA
40	18 in RGRCP, Class IV	269 LF
47	Storm Drain Manhole, MAG Det 520 & 522	2 EA
49	Maintenance Road, FCD Det FCD201-2	206 SY
50	Inlet with Trash Rack, 18 in Pipe, MAG Det 502-1	1 EA

General Notes:

1) All Utilities In Conflict With Storm Drain Are To Be Verified And/or Relocated Prior To Construction.
2) All Stations and Offsets are Referenced from the Northern Parkway Construction Centerline, Unless Otherwise Noted on Plans

SCALE: Hor: 1"=20'
Vert: NA

20 0 20 40
SCALE IN FEET

Contact Arizona 811 Two Working Days Before You Dig
Call 811 or Click Arizona811.com

NO.	REVISION	BY	DATE
3			
2			
1			

MARICOPA COUNTY

NORTHERN PARKWAY
103RD AVENUE TO 91ST AVENUE - PHASE 1
PROJECT NO. TT0372

	BY	DATE
DESIGNED	BF	5/6/2026
DRAWN	BF, JW, MM, AB, GT	5/6/2026
CHECKED	JH	5/6/2026

Registered Professional Engineer (Civil) CERTIFICATE NO. 62327 WILLIAM FOGELL Date Signed 05/07/26 ARIZONA U.S.A.

J2 Design

NORTHERN AVENUE - STORM DRAIN PLAN
STA 483+40 TO 488+40

SHEET DR01

TRACS NO.

TYLI_GN_bwpdf.pltcfg
MCDOT_TYLIN_PRINT.tbl
10:39:21 PM 5/7/2026
OpenRoads_Imperial
c:\bmstyli-pw\jwotring__j2design\d0573068\TT0372_SC_Drainage_Plan_01_Northern_01.dgn

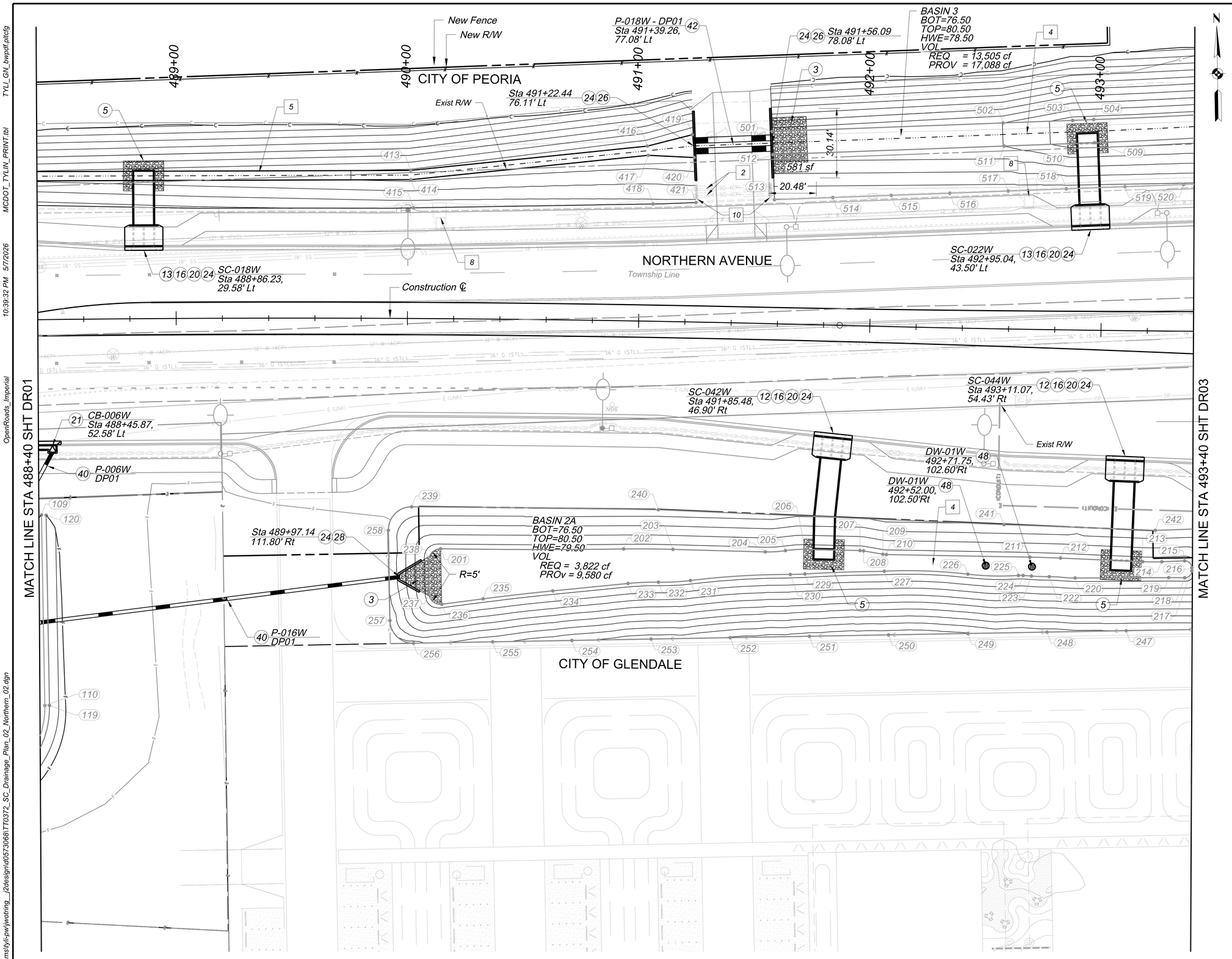

F.H.W.A. REGION	STATE	PROJECT NO.	SHEET NO.	TOTAL SHEETS	RECORD DRAWING
9	AZ	TT0372	46	224	

REMOVAL / RELOCATE

2	Remove Pipe, Backfill & Compact, D < 30 in	66 LF
4	Earthwork for Retention Basins	14,706 CY
5	Channel Excavation	1,500 CY
8	Remove Scupper	2 EA
10	Remove Concrete Headwall	2 EA

CONSTRUCTION

3	Riprap, D50=6in	8 CY
5	Riprap, D50=9 in	72 CY
12	Concrete Scupper, MAG Det 206, S/W=6 ft, 2-4 ft Curb Opening	2 EA
13	Concrete Scupper, MAG Det 206, S/W=8 ft, 2-4 ft Curb Opening	2 EA
16	Concrete Scupper Spillway, MAG Det OROW-510-2, 2-4 ft Curb Openings	138 LF
20	Sediment Trap, MAG Det OROW-511	4 EA
21	Catch Basin, MAG Det 542-1, Type M-1, L=17 ft	1 EA
24	Safety Rail, Height 3 ft - 6 in, MAG Det 145	138 LF
26	Headwall, Det 5524, Straight Type, 2-30 in Pipe, Modified per Det D4 on Sht DT04	2 EA
28	Headwall, Det 5524, U Type, 18 in Pipe, Modified per Det D4 on Sht DT04	1 EA
40	18 in RGRCP, Class IV	158 LF
42	30 in RGRCP, Class IV	70 LF
48	Drywell, MaxWell Plus or Equal, Basic Depth 30 ft per DT05 on Sht DT05	1 EA

General Notes:

1) All Utilities In Conflict With Storm Drain Are To Be Verified And/or Relocated Prior To Construction.
2) All Stations and Offsets are Referenced from the Northern Parkway Construction Centerline, Unless Otherwise Noted on Plans

SCALE: Hor: 1"=20'
Vert: NA

20 0 20 40
SCALE IN FEET

Contact Arizona 811 Two Working Days Before You Dig
Call 811 or Click Arizona811.com

NO.	REVISION	BY	DATE
1			
2			
3			

MARICOPA COUNTY

NORTHERN PARKWAY
103RD AVENUE TO 91ST AVENUE - PHASE 1
PROJECT NO. TT0372

	BY	DATE
DESIGNED	BF	5/6/2026
DRAWN	BF, JW, MM, AB, GT	5/6/2026
CHECKED	JH	5/6/2026

Registered Professional Engineer (Civil) CERTIFICATE NO. 62327 WILLIAM FOGELL Date Signed 05/07/26 ARIZONA U.S.A.

J2 Design

NORTHERN AVENUE - STORM DRAIN PLAN
STA 488+40 TO 493+40

SHEET DR02

TRACS NO.

TYLI_GN_bwpdf.pltcfg
MCDOT_TYLIN_PRINT.tbl
5/7/2026 10:39:32 PM
OpenRoads_Imperial
c:\bmsftyli-pw\wotring__j2design\d0573068\TT0372_SC_Drainage_Plan_02_Northern_02.dgn

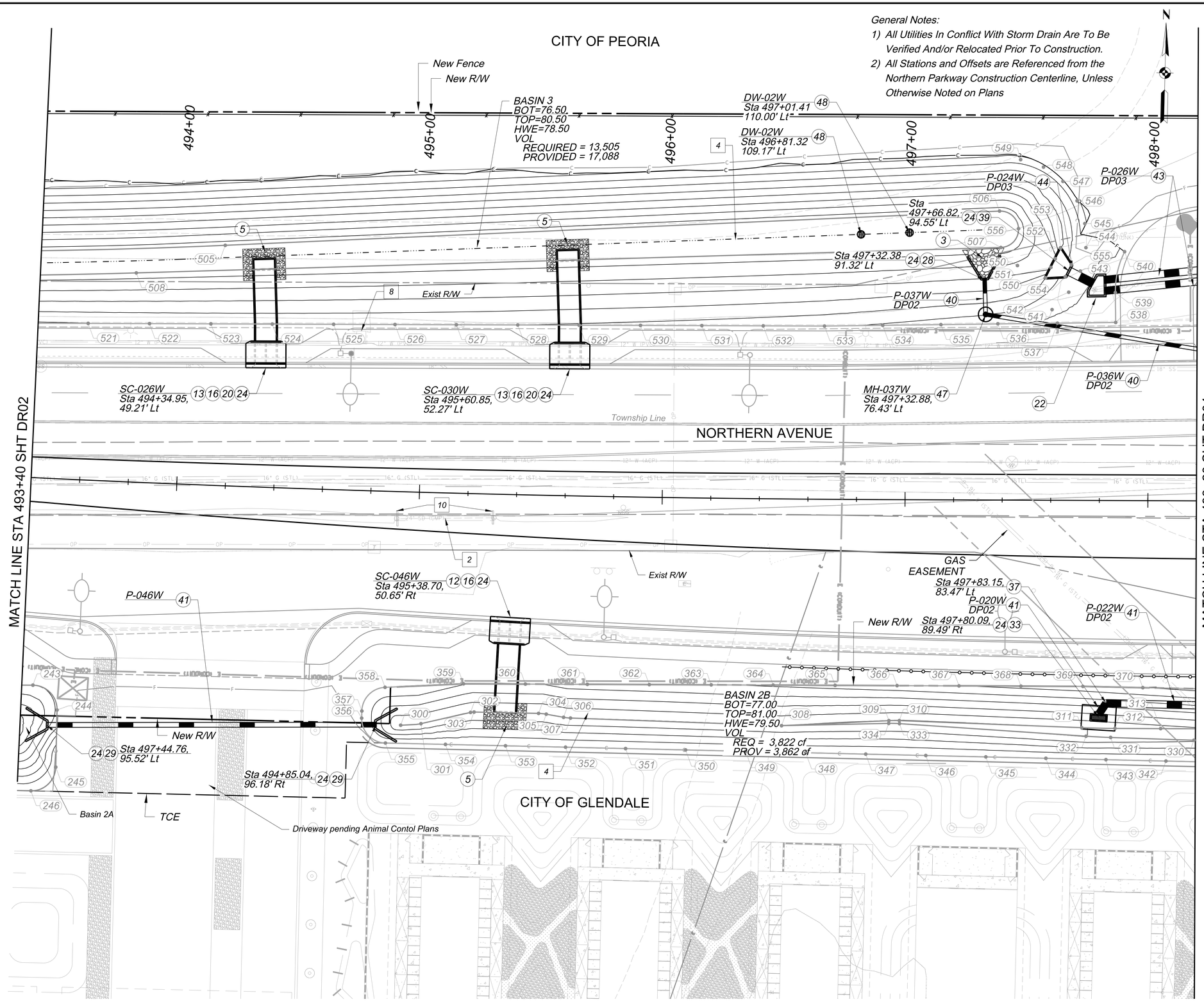

General Notes:

1) *All Utilities In Conflict With Storm Drain Are To Be Verified And/or Relocated Prior To Construction.*
2) *All Stations and Offsets are Referenced from the Northern Parkway Construction Centerline, Unless Otherwise Noted on Plans*

F.H.W.A. REGION	STATE	PROJECT NO.	SHEET NO.	TOTAL SHEETS	RECORD DRAWING
9	AZ	TT0372	47	224	

REMOVAL / RELOCATE

2	Remove Pipe, Backfill & Compact, D < 30 in	40 LF
4	Earthwork for Retention Basins	14,665 CY
8	Remove Scupper	1 EA
10	Remove Concrete Headwall	2 EA

CONSTRUCTION

3	Riprap, D50=6in	3 CY
5	Riprap, D50=9 in	38 CY
12	Concrete Scupper, MAG Det 206, S/W=6 ft, 2-4 ft Curb Opening	1 EA
13	Concrete Scupper, MAG Det 206, S/W=8 ft, 2-4 ft Curb Opening	2 EA
16	Concrete Scupper Spillway, MAG Det OROW-510-2, 2-4 ft Curb Openings	101 LF
20	Sediment Trap, MAG Det OROW-511	2 EA
22	Concrete Junction Box, 1-48 in (in) 2-36 in (out), Special Det D2 on Sht DT02	1 EA
24	Safety Rail, Height 3 ft - 6 in, MAG Det 145	127 LF
28	Headwall, Det 5524, U Type, 18 in Pipe, Modified per Det D4 on Sht DT04	1 EA
29	Headwall, Det 5524, U Type, 24 in Pipe, Modified per Det D4 on Sht DT04	2 EA
33	Double Catch Basin, ADOT C-15.81, Modified per Special Det D3 on Sht DT03	1 EA
37	Concrete Pipe Collar, MAG Det 505, 24 in Pipe	1 EA
39	Headwall, Drop Inlet, MAG Det 501-5, 48 in Pipe, Modified per Det D4 on Sht DT04	1 EA
40	18 in RGRCP, Class IV	106 LF
41	24 in RGRCP, Class IV	176 LF
43	36 in RGRCP, Class IV	80 LF
44	48 in RGRCP, Class IV	24 LF
47	Storm Drain Manhole, MAG Det 520 & 522	1 EA
48	Drywell, MaxWell Plus or Equal, Basic Depth 30 ft per DT05 on Sht DT05	1 EA

SCALE: Hor: 1"=20'
Vert: NA

20 0 20 40
SCALE IN FEET

Contact Arizona 811 Two Working Days Before You Dig
Call 811 or Click Arizona811.com

NO.	REVISION	BY	DATE
1			
2			
3			

MARICOPA COUNTY

NORTHERN PARKWAY
103RD AVENUE TO 91ST AVENUE - PHASE 1
PROJECT NO. TT0372

	BY	DATE
DESIGNED	BF	5/6/2026
DRAWN	BF, JW, MM, AB, GT	5/6/2026
CHECKED	JH	5/6/2026

Registered Professional Engineer (Civil) CERTIFICATE NO. 62327 WILLIAM FOGELL Date Signed 05/06/26 ARIZONA U.S.A.

J2 Design

NORTHERN AVENUE - STORM DRAIN PLAN
STA 493+40 TO 498+40

SHEET DR03

TRACS NO.

c:\bmstyl\j-pw\working__j2design\0573068\TT0372_SC_Drainage_Plan_03_Northern_03.dgn
OpenRoads_Imperial 10:39:43 PM 5/7/2026 MCDOT_TYLIN_PRINT.tbl TYLI_GN_bwpdf.pltcfg

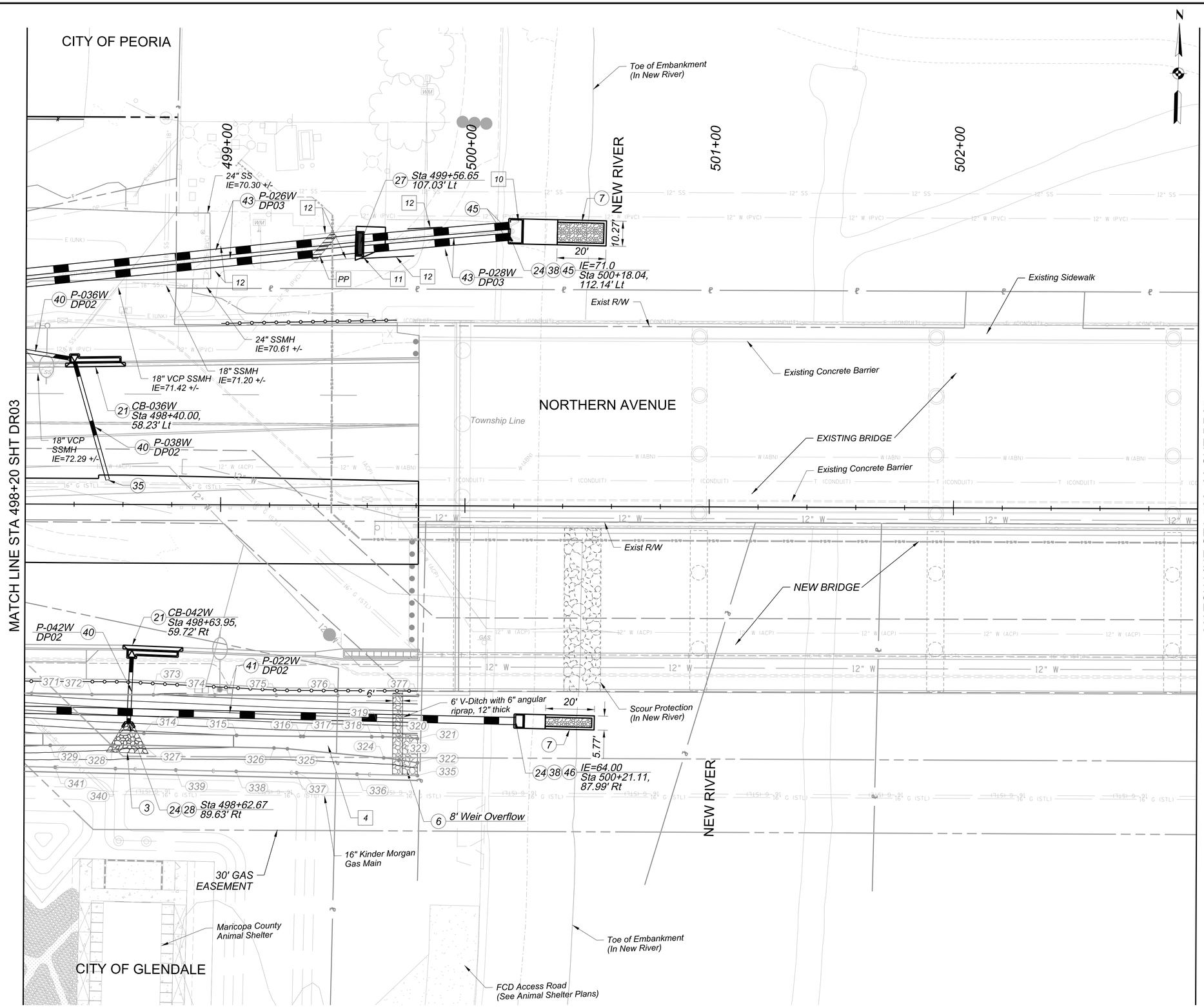

F.H.W.A. REGION	STATE	PROJECT NO.	SHEET NO.	TOTAL SHEETS	RECORD DRAWING
9	AZ	TT0372	48	224	

REMOVAL / RELOCATE

PP	Pipe Protection per MAG Std Dtl 404, MAG Std Spec Section 610	
4	Earthwork for Retention Basins	1,159 CY
10	Remove Concrete Headwall	1 EA
11	Remove Junction Structure	1 EA
12	Sawcut and remove and replace permanent asphalt pavement, per MAG Std Det 200 T-Top	84 SY

CONSTRUCTION

3	Riprap, D50=6in	2 CY
6	Riprap, D50=12 in	20 CY
7	Grouted Riprap, D50=12 in	18 CY
21	Catch Basin, MAG Det 542-1, Type M-1, L=17 ft	2 EA
24	Safety Rail, Height 3 ft - 6 in, MAG Det 145	12 LF
27	Triple Catch Basin, ADOT C-15.81, Modified per Special Det D3 on Sht DT03	1 EA
28	Headwall, Det 5524, U Type, 18 in Pipe, Modified per Det D4 on Sht DT04	1 EA
35	Pipe Plug, MAG Det 427, 18 in Pipe	1 EA
38	Outlet Headwall, per Special Detail D1 on Sht DT01	2 EA
40	18 in RGRCP, Class IV	99 LF
41	24 in RGRCP, Class IV	192 LF
43	36 in RGRCP, Class IV	386 LF
45	Access Barrier, 36 in, ADOT C-13.75	2 EA
46	Access Barrier, 24 in, ADOT C-13.75	1 EA

General Notes:

1) All Utilities In Conflict With Storm Drain Are To Be Verified And/or Relocated Prior To Construction.
2) All Stations and Offsets are Referenced from the Northern Parkway Construction Centerline, Unless Otherwise Noted on Plans

SCALE: Hor: 1"=20'
Vert: NA

20 0 20 40
SCALE IN FEET

Contact Arizona 811 Two Working Days Before You Dig
Call 811 or Click Arizona811.com

NO.	REVISION	BY	DATE
3			
2			
1			

MARICOPA COUNTY

NORTHERN PARKWAY
103RD AVENUE TO 91ST AVENUE - PHASE 1
PROJECT NO. TT0372

	BY	DATE
DESIGNED	BF	5/6/2026
DRAWN	BF, JW, MM, AB, GT	5/6/2026
CHECKED	JH	5/6/2026

Registered Professional Engineer (Civil) CERTIFICATE NO. 62327 WILLIAM FOGELL Date Signed 05/06/26 ARIZONA U.S.A.

J2 Design

NORTHERN AVENUE - STORM DRAIN PLAN
STA 498+40 TO 503+80

SHEET DR04

TRACS NO.

c:\bmsltyl-pw\working__j2design\0573068\TT0372_SC_Drainage_Plan_04_Northern_04.dgn
OpenRoads_Imperial 10:39:54 PM 5/7/2026 MCDOT_TYLIN_PRINT.tbl TYLI_GN_bwpdf.pltcfg

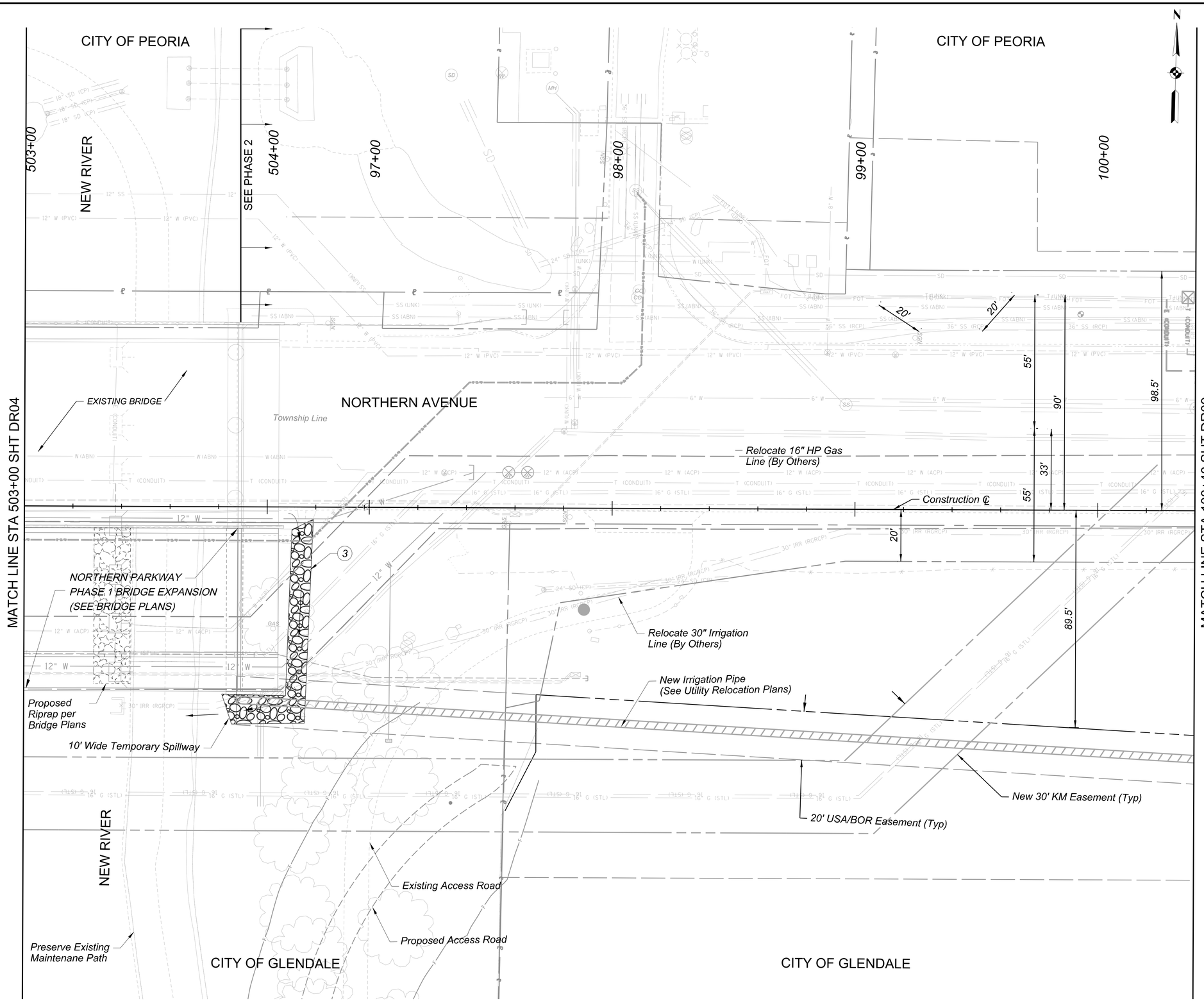

F.H.W.A. REGION	STATE	PROJECT NO.	SHEET NO.	TOTAL SHEETS	RECORD DRAWING
9	AZ	TT0372	49	224	

☐ REMOVAL / RELOCATE ☐

◯ CONSTRUCTION ◯

3	Riprap, D50=6in	43 CY

General Notes:

1) All Utilities In Conflict With Storm Drain Are To Be Verified And/or Relocated Prior To Construction.
2) All Stations and Offsets are Referenced from the Northern Parkway Construction Centerline, Unless Otherwise Noted on Plans

SCALE: Hor: 1"=20'
Vert: NA

20 0 20 40
SCALE IN FEET

Contact Arizona 811 Two Working Days Before You Dig
Call 811 or Click Arizona811.com

NO.	REVISION	BY	DATE
3			
2			
1			

MARICOPA COUNTY

NORTHERN PARKWAY
103RD AVENUE TO 91ST AVENUE - PHASE 1
PROJECT NO. TT0372

	BY	DATE
DESIGNED	BF	5/6/2026
DRAWN	BF, JW, MM, AB, GT	5/6/2026
CHECKED	JH	5/6/2026

Registered Professional Engineer (Civil) CERTIFICATE NO. 62327 WILLIAM FOGELL Date Signed 05/06/26 ARIZONA U.S.A.

J2 Design

NORTHERN AVENUE - STORM DRAIN PLAN
STA 503+40 TO 100+40

SHEET DR05

TRACS NO.

c:\bmsityl\-pw\jwotring__j2design\0573068\TT0372_SC_Drainage_Plan_05_Northern-05.dgn
OpenRoads_Imperial 10:40:05 PM 5/7/2026 MCDOT_TYLIN_PRINT.tbl TYLI_GN_bwpdf.pltcfg

c:\bmstyli-pw\jwotring__j2design\d0573068\TT0372_SC_Drainage_Plan_06_Basin.dgn
OpenRoads_Imperial 10:40:14 PM 5/7/2026 MCDOT_TYLIN_PRINT.tbl TYLI_GN_bwpdf.pltcfg

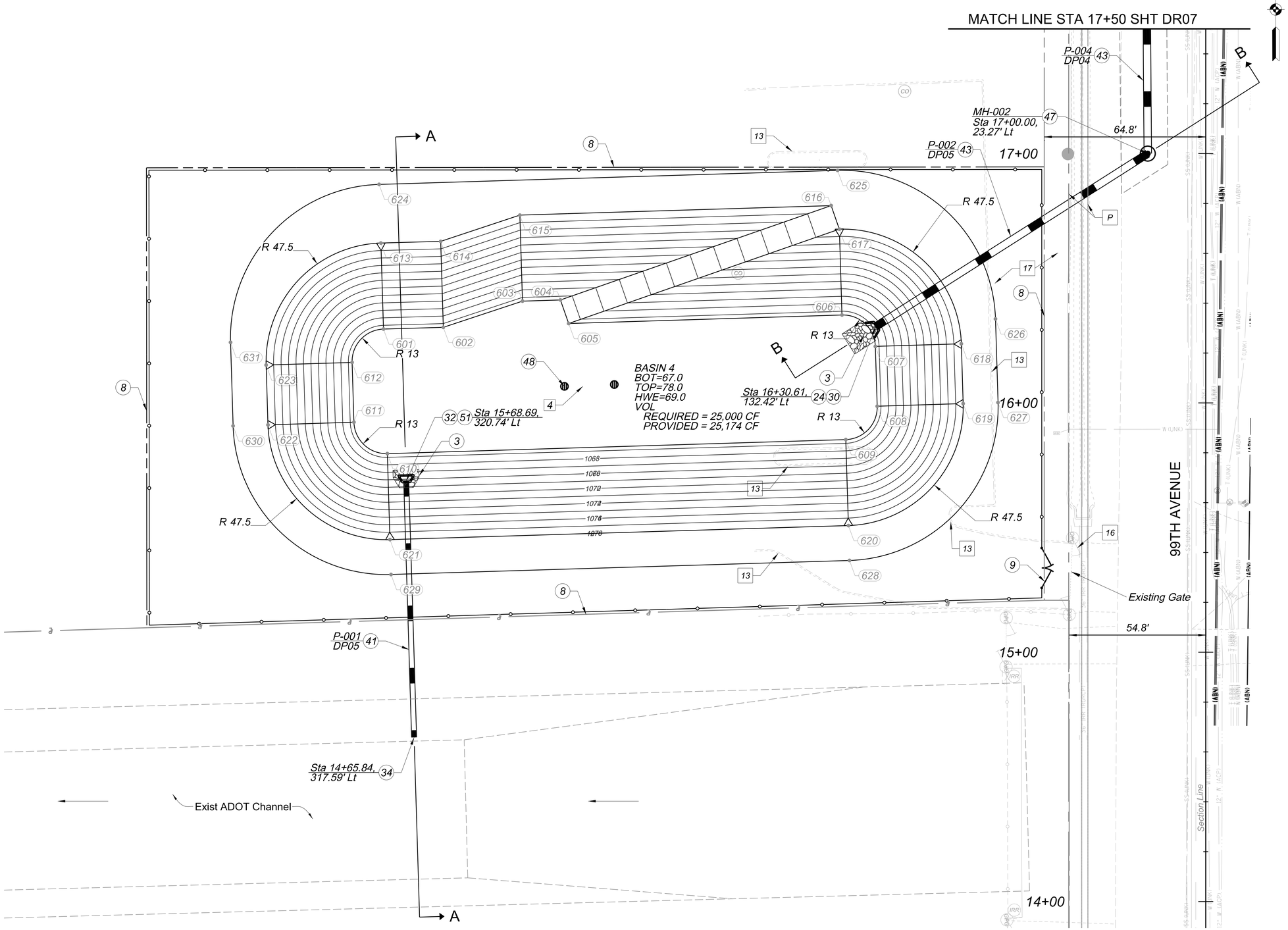

F.H.W.A. REGION	STATE	PROJECT NO.	SHEET NO.	TOTAL SHEETS	RECORD DRAWING
9	AZ	TT0372	50	224	

☐ REMOVAL / RELOCATE ☐

P	Preserve and Protect in Place	
4	Earthwork for Retention Basins	8400 CY
13	Remove Concrete Single Curb	310 LF
15	Remove Chain Link Fence	512 LF
16	Remove Gate	1 EA
17	Removal of Pavement	2538 SY

◯ CONSTRUCTION ◯

3	Riprap, D50=6in	12 CY
8	6 ft Chain Link Fence, Type 1, ADOT C-12.10	1080 LF
9	6 ft x 24 ft Chain Link Fence Gate, MAG Det 160	1 EA
24	Safety Rail, Height 3 ft - 6 in, MAG Det 145	24 LF
30	Headwall, Det 5524, U Type, 36 in Pipe, Modified per Det D4 on Sht DT04	1 EA
32	Headwall, Drop Inlet, MAG Det 501-5, 24 in Pipe, Modified per Det D4 on Sht DT04	1 EA
34	Storm Drain Outlet, ADOT C-13.76	1 EA
41	24 in RGRCP, Class IV	104 LF
43	36 in RGRCP, Class IV	180 LF
47	Storm Drain Manhole, MAG Det 520 & 522	1 EA
48	Drywell, MaxWell Plus or Equal, Basic Depth 30 ft per DT05 on Sht DT05	1 EA
49	Maintenance Road, FCD Det FCD201-2	41 SY
51	Inlet with Trash Rack, 24 in Pipe, MAG Det 502-1	1 EA

General Notes:

1) All Utilities In Conflict With Storm Drain Are To Be Verified And/or Relocated Prior To Construction.
2) All Stations and Offsets are Referenced from the 99th Ave Construction Centerline, Unless Otherwise Noted on Plans

SCALE: Hor: 1"=20'
Vert: NA

20 0 20 40
SCALE IN FEET

Contact Arizona 811 Two Working Days Before You Dig
ARIZONA811 BLUE STAKE, INC.
Call 811 or Click Arizona811.com

NO.	REVISION	BY	DATE
3			
2			
1			

MARICOPA COUNTY

NORTHERN PARKWAY
103RD AVENUE TO 91ST AVENUE - PHASE 1
PROJECT NO. TT0372

	BY	DATE
DESIGNED	BF	5/6/2026
DRAWN	BF, JW, MM, AB, GT	5/6/2026
CHECKED	JH	5/6/2026

Registered Professional Engineer (Civil) CERTIFICATE NO. 62327 WILLIAM FOGELL Date Signed 05/07/26 State of Arizona U.S.A.

J2 Design

99TH AVENUE - STORM DRAIN PLAN
BASIN DETAIL SHEET

SHEET DR06

TRACS NO.

OpenRoads_Imperial 10:40:23 PM 5/7/2026 MCDOT_TYLIN_PRINT.tbl TYLI_GN_bwpdf.pltcfg
c:\bmsityli-pw\jwotring__j2designld0573068\TT0372_SC_Drainage_Plan_07_99th-01.dgn

F.H.W.A. REGION	STATE	PROJECT NO.	SHEET NO.	TOTAL SHEETS	RECORD DRAWING
9	AZ	TT0372	51	224	

☐ REMOVAL / RELOCATE ☐

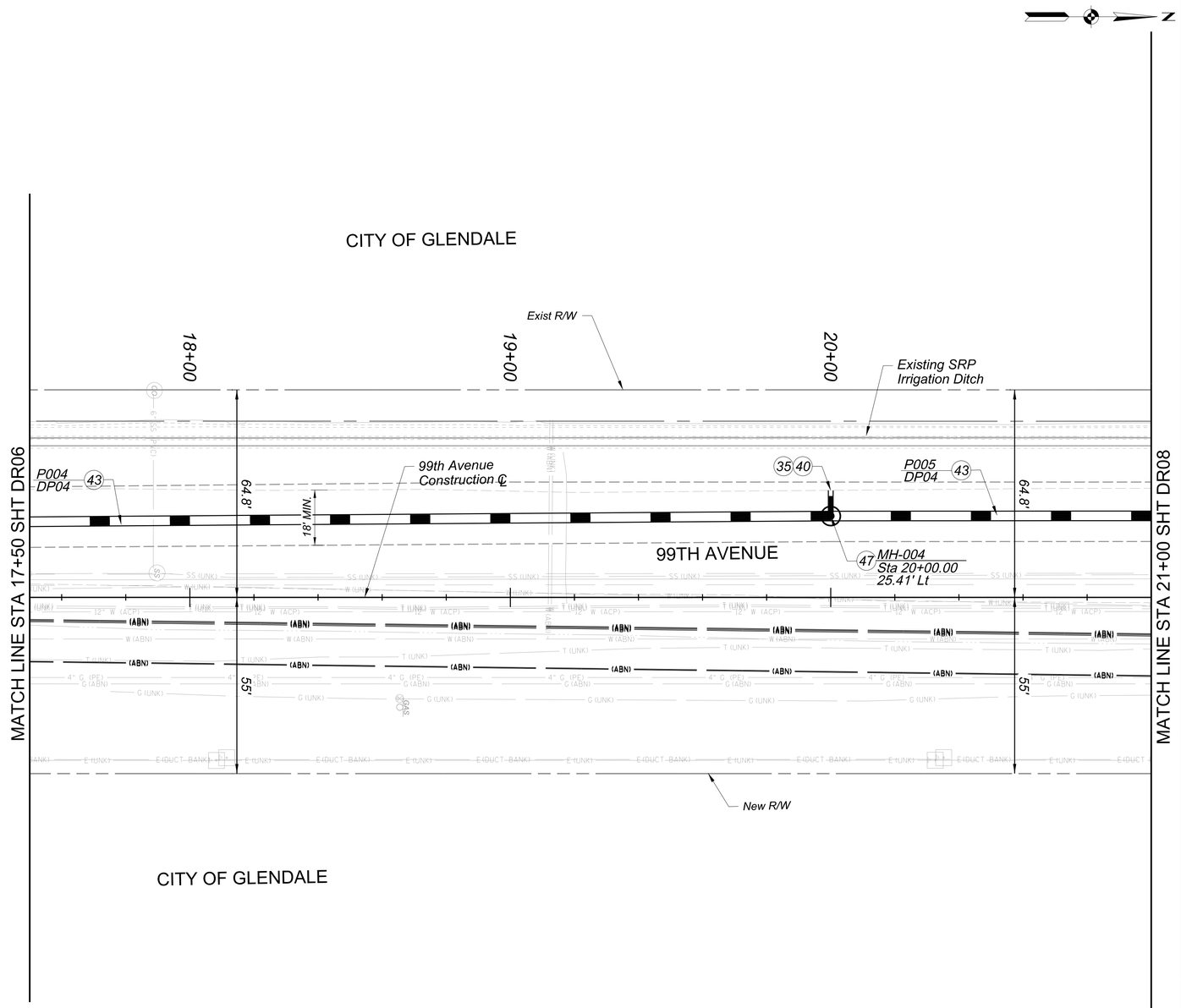

Notes:
1. Plug Stub Out per MAG Std Dtl 427
(NPI Incidental to Cost of MH)

○ CONSTRUCTION ○

35	Pipe Plug, MAG Det 427, 18 in Pipe	1 EA
40	18 in RGRCP, Class IV	8 LF
43	36 in RGRCP, Class IV	350 LF
47	Storm Drain Manhole, MAG Det 520 & 522	1 EA

General Notes:
1) All Utilities In Conflict With Storm Drain Are To Be Verified And/or Relocated Prior To Construction.
2) All Stations and Offsets are Referenced from the 99th Ave Construction Centerline, Unless Otherwise Noted on Plans

SCALE: Hor: 1"=20'
Vert: NA

20 0 20 40
SCALE IN FEET

Contact Arizona 811 Two Working Days Before You Dig
ARIZONA811 BLUE STAKE, INC.
Call 811 or Click Arizona811.com

NO.	REVISION	BY	DATE
3			
2			
1			

MARICOPA COUNTY

NORTHERN PARKWAY
103RD AVENUE TO 91ST AVENUE - PHASE 1
PROJECT NO. TT0372

	BY	DATE
DESIGNED	BF	5/6/2026
DRAWN	BF, JW, MM, AB, GT	5/6/2026
CHECKED	JH	5/6/2026

Registered Professional Engineer (Civil) CERTIFICATE NO. 62327 WILLIAM FOGELL Date Signed 05/07/26 Arizona U.S.A.

J2 Design

99TH AVENUE - STORM DRAIN PLAN
STA 17+50 TO 21+00

SHEET DR07

TRACS NO.

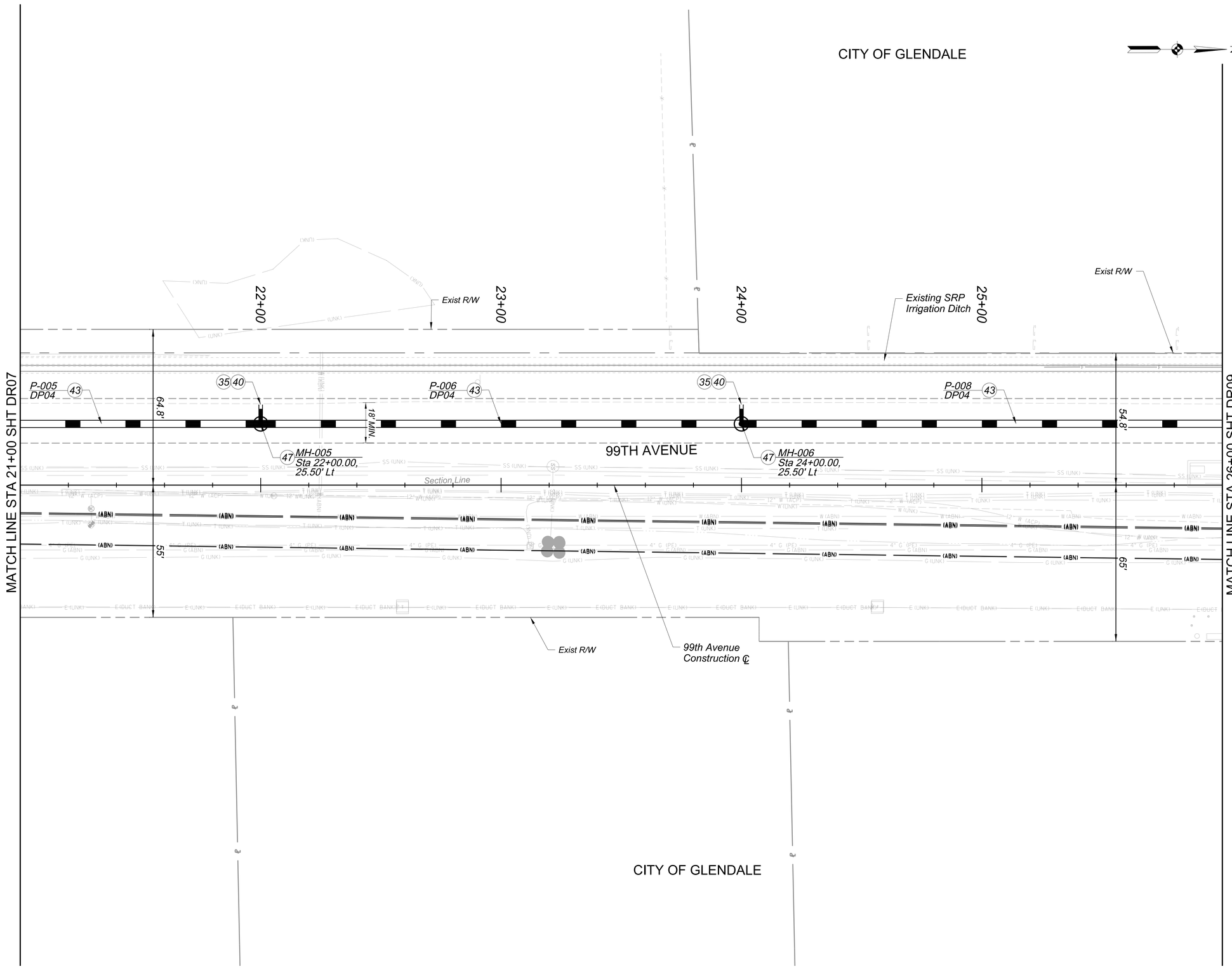

F.H.W.A. REGION	STATE	PROJECT NO.	SHEET NO.	TOTAL SHEETS	RECORD DRAWING
9	AZ	TT0372	52	224	

☐ REMOVAL / RELOCATE ☐

○ CONSTRUCTION ○

35	Pipe Plug, MAG Det 427, 18 in Pipe	2 EA
40	18 in RGRCP, Class IV	16 LF
43	36 in RGRCP, Class IV	500 LF
47	Storm Drain Manhole, MAG Det 520 & 522	2 EA

General Notes:

1) *All Utilities In Conflict With Storm Drain Are To Be Verified And/or Relocated Prior To Construction.*
2) *All Stations and Offsets are Referenced from the 99th Ave Construction Centerline, Unless Otherwise Noted on Plans*

SCALE: Hor: 1"=20'
Vert: NA

20 0 20 40
SCALE IN FEET

Contact Arizona 811 Two Working Days Before You Dig
Call 811 or Click Arizona811.com

NO.	REVISION	BY	DATE
3			
2			
1			

MARICOPA COUNTY

NORTHERN PARKWAY
103RD AVENUE TO 91ST AVENUE - PHASE 1
PROJECT NO. TT0372

	BY	DATE
DESIGNED	BF	5/6/2026
DRAWN	BF, JW, MM, AB, GT	5/6/2026
CHECKED	JH	5/6/2026

State Registered Professional Engineer (Civil) CERTIFICATE NO. 62327 WILLIAM FOGELL Date Signed 05/07/26 ARIZONA U.S.A.

William Fogell

J2 Design

99TH AVENUE - STORM DRAIN PLAN
STA 21+00 TO 26+00

SHEET DR08

TRACS NO.

TYLI_GN_bwpdf.pltcfg
MCDOT_TYLIN_PRINT.tbl
10:40:33 PM 5/7/2026
OpenRoads_Imperial
c:\bmstyli-pw\wotring__j2design\d0573068\TT0372_SC_Drainage_Plan_08_99th-02.dgn

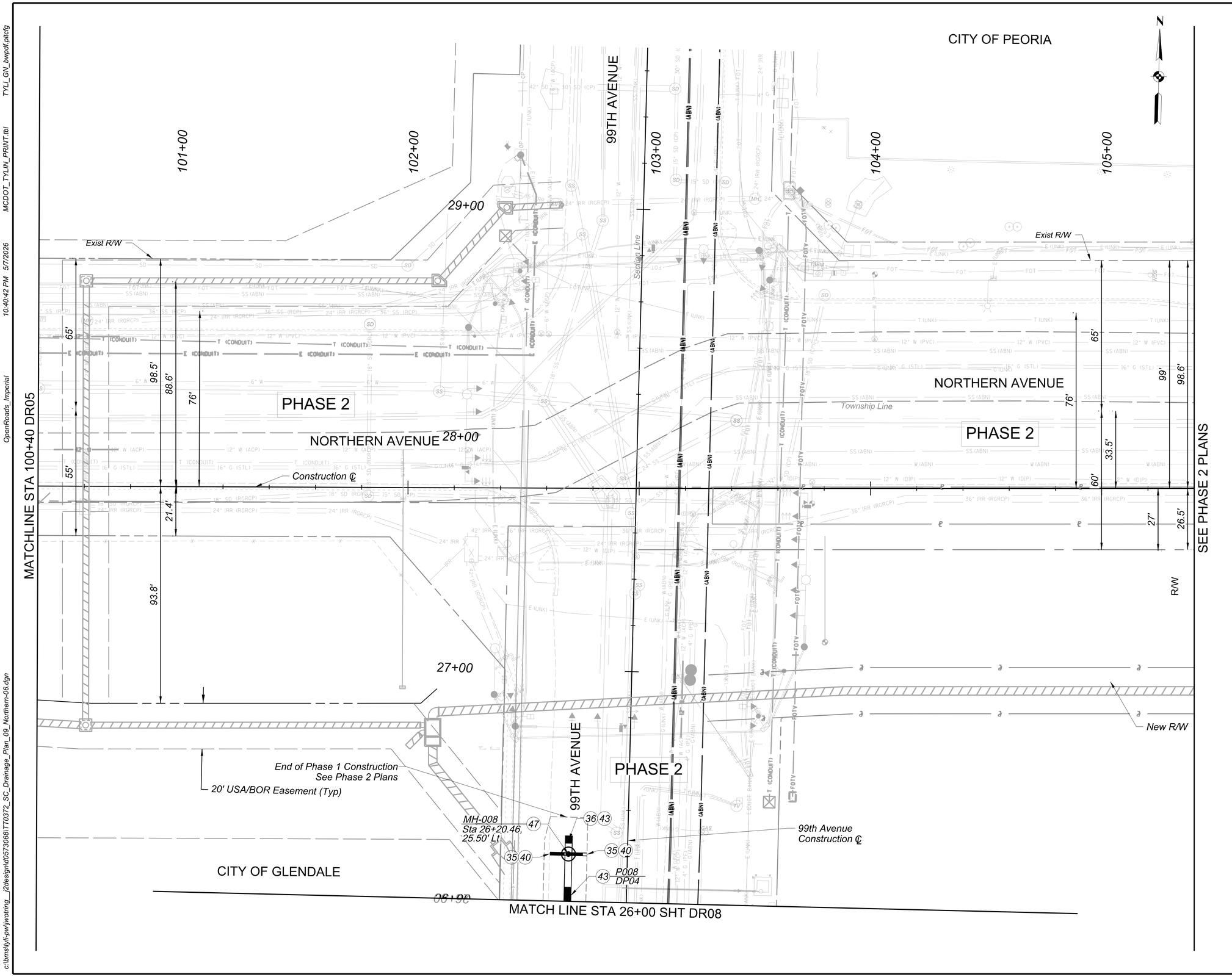

F.H.W.A. REGION	STATE	PROJECT NO.	SHEET NO.	TOTAL SHEETS	RECORD DRAWING
9	AZ	TT0372	53	224	

☐ *REMOVAL / RELOCATE* ☐

○ *CONSTRUCTION* ○

(35)	*Pipe Plug, MAG Det 427, 18 in Pipe*	2 EA
(36)	*Pipe Plug, MAG Det 427, 36 in Pipe*	1 EA
(40)	*18 in RGRCP, Class IV*	16 LF
(43)	*36 in RGRCP, Class IV*	28 LF
(47)	*Storm Drain Manhole, MAG Det 520 & 522*	1 EA

General Notes:

1) *All Utilities In Conflict With Storm Drain Are To Be Verified And/or Relocated Prior To Construction.*
2) *All Stations and Offsets are Referenced from the Northern Parkway Construction Centerline, Unless Otherwise Noted on Plans*

SCALE: Hor: 1"=20'
Vert: NA

20 0 20 40
SCALE IN FEET

Contact Arizona 811 Two Working Days Before You Dig
Call 811 or Click Arizona811.com

NO.	REVISION	BY	DATE
3			
2			
1			

MARICOPA COUNTY

NORTHERN PARKWAY
103RD AVENUE TO 91ST AVENUE - PHASE 1
PROJECT NO. TT0372

	BY	DATE
DESIGNED	BF	5/6/2026
DRAWN	BF, JW, MM, AB, GT	5/6/2026
CHECKED	JH	5/6/2026

Registered Professional Engineer (Civil) CERTIFICATE NO. 62327 WILLIAM FOGELL Date Signed 05/07/26 ARIZONA U.S.A.

William Fogell

J2 Design

NORTHERN AVENUE - STORM DRAIN PLAN
STA 100+40 TO 105+40

SHEET DR09

TRACS NO.

c:\bmstyli-pw\jwotring__j2design\d0573068\TT0372_SC_Drainage_Plan_09_Northern-06.dgn OpenRoads_Imperial 10:40:42 PM 5/7/2026 MCDOT_TYLIN_PRINT.tbl TYLI_GN_bwpdf.pltcfg

F.H.W.A. REGION	STATE	PROJECT NO.	SHEET NO.	TOTAL SHEETS	RECORD DRAWING
9	AZ	TT0372	54	224	

POINT TABLE

POINT #	DESCRIPTION	NORTHING	EASTING	ELEVATION
101	BASIN BOTTOM	928314.06	589319.31	1077.00
102	BASIN BOTTOM	928314.07	589458.31	1077.00
103	BASIN BOTTOM	928291.07	589481.31	1077.00
104	BASIN BOTTOM	928261.07	589481.32	1077.00
105	BASIN BOTTOM	928238.07	589458.32	1077.00
106	BASIN BOTTOM	928238.06	589319.32	1077.00
107	BASIN BOTTOM	928261.06	589296.32	1077.00
108	BASIN BOTTOM	928291.06	589296.31	1077.00
109	BASIN TOP	928343.52	589497.31	1081.00
110	BASIN TOP	928261.07	589497.32	1081.00
111	BASIN TOP	928222.07	589458.32	1081.00
112	BASIN TOP	928222.06	589319.32	1081.00
113	BASIN TOP	928222.06	589295.32	1081.00
114	BASIN TOP	928239.09	589263.09	1081.00
115	BASIN BERM	928238.35	589261.18	1081.00
116	BASIN BERM	928220.06	589295.32	1081.00
117	BASIN BERM	928220.06	589319.32	1081.00
118	BASIN BERM	928220.07	589458.32	1081.00
119	BASIN BERM	928261.07	589499.32	1081.00
120	BASIN BERM	928343.38	589499.31	1081.00
121	BASIN TOP	928261.06	589256.32	1081.00
122	BASIN TOP	928291.06	589256.31	1081.00
201	BASIN BOTTOM	928325.88	589669.66	1076.50
202	BASIN BOTTOM	928324.38	589748.77	1076.50
203	BASIN BOTTOM	928323.84	589770.08	1076.50
204	BASIN BOTTOM	928322.05	589809.95	1076.50
205	BASIN BOTTOM	928322.44	589818.72	1076.50
206	BASIN BOTTOM	928322.84	589827.27	1076.50
207	BASIN BOTTOM	928321.91	589850.96	1076.50
208	BASIN BOTTOM	928321.74	589852.46	1076.50
209	BASIN BOTTOM	928320.14	589860.80	1076.50
210	BASIN BOTTOM	928319.96	589862.34	1076.50
211	BASIN BOTTOM	928317.78	589924.39	1076.50
212	BASIN BOTTOM	928317.14	589937.59	1076.50
213	BASIN BOTTOM	928314.95	589973.12	1076.50
214	BASIN BOTTOM	928314.78	589981.37	1076.50
215	BASIN BOTTOM	928314.99	589991.23	1076.50
216	BASIN BOTTOM	928311.91	589994.29	1076.50
217	BASIN BOTTOM	928310.62	589994.26	1076.50
218	BASIN BOTTOM	928307.70	589991.14	1076.50
219	BASIN BOTTOM	928307.87	589984.22	1076.50
220	BASIN BOTTOM	928308.41	589943.74	1076.50
221	BASIN BOTTOM	928308.80	589938.16	1076.50
222	BASIN BOTTOM	928309.19	589932.56	1076.50
223	BASIN BOTTOM	928309.58	589924.88	1076.50
224	BASIN BOTTOM	928309.90	589921.31	1076.50
225	BASIN BOTTOM	928309.94	589919.25	1076.50
226	BASIN BOTTOM	928310.89	589897.40	1076.50
227	BASIN BOTTOM	928312.80	589861.30	1076.50
228	BASIN BOTTOM	928312.76	589857.48	1076.50
229	BASIN BOTTOM	928312.21	589826.97	1076.50
230	BASIN BOTTOM	928312.13	589820.64	1076.50
231	BASIN BOTTOM	928310.25	589777.40	1076.50
232	BASIN BOTTOM	928309.76	589763.57	1076.50

POINT TABLE

POINT #	DESCRIPTION	NORTHING	EASTING	ELEVATION
233	BASIN BOTTOM	928309.45	589750.34	1076.50
234	BASIN BOTTOM	928306.81	589717.81	1076.50
235	BASIN BOTTOM	928303.89	589687.64	1076.50
236	BASIN BOTTOM	928301.89	589669.71	1076.50
237	BASIN BOTTOM	928306.98	589664.16	1076.50
238	BASIN BOTTOM	928321.01	589664.49	1076.50
239	BASIN TOP	928344.23	589657.41	1080.97
240	BASIN TOP	928341.11	589764.08	1080.71
241	BASIN TOP	928332.04	589913.38	1079.96
242	BASIN TOP	928328.39	589978.78	1079.89
243	BASIN TOP	928328.75	589999.51	1079.96
244	BASIN TOP	928318.76	590009.68	1080.24
245	BASIN TOP	928295.24	590009.68	1083.78
246	BASIN TOP	928285.24	589999.68	1083.92
247	BASIN TOP	928285.24	589965.43	1084.06
248	BASIN TOP	928285.24	589931.18	1084.48
249	BASIN TOP	928285.24	589896.93	1085.07
250	BASIN TOP	928285.24	589862.68	1085.63
251	BASIN TOP	928285.24	589828.43	1085.52
252	BASIN TOP	928285.24	589794.18	1085.08
253	BASIN TOP	928285.24	589759.93	1084.60
254	BASIN TOP	928285.24	589725.68	1083.85
255	BASIN TOP	928285.24	589691.43	1082.75
256	BASIN TOP	928285.24	589657.18	1082.41
257	BASIN TOP	928295.24	589647.18	1081.70
258	BASIN TOP	928334.23	589647.18	1081.00
300	BASIN BOTTOM	928315.76	590151.29	1077.00
301	BASIN BOTTOM	928316.59	590159.63	1077.00
302	BASIN BOTTOM	928321.70	590179.93	1077.00
303	BASIN BOTTOM	928321.88	590181.38	1077.00
304	BASIN BOTTOM	928321.95	590207.95	1077.00
305	BASIN BOTTOM	928321.70	590211.13	1077.00
306	BASIN BOTTOM	928320.57	590218.29	1077.00
307	BASIN BOTTOM	928320.33	590221.15	1077.00
308	BASIN BOTTOM	928319.20	590308.11	1077.00
309	BASIN BOTTOM	928322.30	590352.26	1077.00
310	BASIN BOTTOM	928322.41	590356.54	1077.00
311	BASIN BOTTOM	928321.23	590431.73	1077.02
312	BASIN BOTTOM	928321.25	590445.39	1077.22
313	BASIN BOTTOM	928321.60	590464.20	1077.58
314	BASIN BOTTOM	928322.98	590527.49	1078.72
315	BASIN BOTTOM	928323.05	590565.45	1079.01
316	BASIN BOTTOM	928323.25	590591.64	1079.21
317	BASIN BOTTOM	928323.26	590592.88	1079.22
318	BASIN BOTTOM	928323.74	590620.76	1079.44
319	BASIN BOTTOM	928323.84	590625.22	1079.47
320	BASIN BOTTOM	928323.76	590631.85	1079.45
321	BASIN BOTTOM	928323.42	590639.55	1079.34
322	BASIN BOTTOM	928313.55	590639.75	1079.34
323	BASIN BOTTOM	928314.56	590632.27	1079.45
324	BASIN BOTTOM	928315.22	590625.92	1079.48
325	BASIN BOTTOM	928318.04	590586.39	1079.17
326	BASIN BOTTOM	928318.23	590580.89	1079.13
327	BASIN BOTTOM	928318.10	590527.25	1078.72

POINT TABLE

POINT #	DESCRIPTION	NORTHING	EASTING	ELEVATION
328	BASIN BOTTOM	928317.92	590514.80	1078.55
329	BASIN BOTTOM	928317.22	590489.28	1078.06
330	BASIN BOTTOM	928317.13	590478.00	1077.84
331	BASIN BOTTOM	928317.48	590443.70	1077.19
332	BASIN BOTTOM	928317.76	590433.56	1077.00
333	BASIN BOTTOM	928321.16	590356.63	1077.00
334	BASIN BOTTOM	928321.16	590352.20	1077.00
335	BASIN TOP	928308.30	590639.84	1081.00
336	BASIN TOP	928308.30	590615.10	1081.00
337	BASIN TOP	928308.30	590590.37	1081.00
338	BASIN TOP	928308.30	590565.64	1081.00
339	BASIN TOP	928308.30	590540.91	1081.00
340	BASIN TOP	928308.30	590516.17	1081.00
341	BASIN TOP	928308.30	590491.44	1081.00
342	BASIN TOP	928308.30	590466.71	1081.00
343	BASIN TOP	928308.30	590441.97	1081.00
344	BASIN TOP	928308.30	590417.24	1081.00
345	BASIN TOP	928308.30	590392.51	1081.00
346	BASIN TOP	928308.30	590367.78	1081.00
347	BASIN TOP	928308.30	590343.04	1081.00
348	BASIN TOP	928308.30	590318.31	1081.00
349	BASIN TOP	928308.30	590293.58	1081.00
350	BASIN TOP	928308.30	590268.84	1081.00
351	BASIN TOP	928308.30	590244.11	1081.00
352	BASIN TOP	928308.30	590219.38	1081.00
353	BASIN TOP	928308.30	590194.65	1081.00
354	BASIN TOP	928308.30	590169.91	1081.00
355	BASIN TOP	928308.30	590145.18	1081.00
356	BASIN TOP	928318.30	590135.18	1081.00
357	BASIN TOP	928321.24	590135.18	1081.00
358	BASIN TOP	928331.21	590144.50	1080.98
359	BASIN TOP	928333.40	590176.75	1080.09
360	BASIN TOP	928333.89	590202.26	1080.00
361	BASIN TOP	928334.37	590227.76	1080.51
362	BASIN TOP	928334.85	590253.27	1080.70
363	BASIN TOP	928335.34	590278.77	1080.91
364	BASIN TOP	928335.82	590304.27	1081.14
365	BASIN TOP	928336.30	590329.78	1081.39
366	BASIN TOP	928336.79	590355.28	1081.67
367	BASIN TOP	928337.27	590380.78	1081.96
368	BASIN TOP	928337.76	590406.29	1082.29
369	BASIN TOP	928338.24	590431.79	1082.63
370	BASIN TOP	928338.29	590456.48	1082.97
371	BASIN TOP	928338.34	590481.17	1083.32
372	BASIN TOP	928338.39	590505.86	1083.64
373	BASIN TOP	928338.87	590531.02	1083.99
374	BASIN TOP	928339.35	590556.18	1084.33
375	BASIN TOP	928339.83	590581.34	1084.64
376	BASIN TOP	928340.30	590606.50	1084.88
377	BASIN TOP	928341.10	590639.21	1085.15
401	BASIN BOTTOM	928499.24	589144.25	1083.50
402	BASIN BOTTOM	928495.24	589144.24	1083.50
403	BASIN TOP	928477.51	589144.24	1086.92
404	BASIN BOTTOM	928494.67	589206.48	1082.88

POINT TABLE

POINT #	DESCRIPTION	NORTHING	EASTING	ELEVATION
405	BASIN BOTTOM	928490.67	589206.37	1082.88
406	BASIN TOP	928478.68	589206.05	1085.73
407	BASIN BOTTOM	928497.31	589382.45	1081.69
408	BASIN BOTTOM	928493.31	589382.35	1081.69
409	BASIN TOP	928481.42	589382.07	1083.70
410	BASIN BOTTOM	928492.64	589454.97	1081.20
411	BASIN BOTTOM	928488.64	589454.93	1081.20
412	BASIN TOP	928478.87	589454.86	1083.48
413	BASIN BOTTOM	928489.68	589659.56	1079.83
414	BASIN BOTTOM	928485.68	589659.70	1079.83
415	BASIN TOP	928473.46	589660.48	1082.78
416	BASIN BOTTOM	928498.40	589762.08	1079.14
417	BASIN BOTTOM	928494.42	589762.42	1079.14
418	BASIN TOP	928473.34	589764.13	1082.32
419	BASIN BOTTOM	928503.11	589782.09	1079.00
420	BASIN BOTTOM	928493.11	589782.29	1079.00
421	BASIN TOP	928473.61	589782.67	1082.23
501	BASIN BOTTOM	928503.77	589816.09	1078.50
502	BASIN BOTTOM	928505.72	589916.18	1078.00
503	BASIN BOTTOM	928506.30	589946.18	1076.50
504	BASIN BOTTOM	928506.48	589955.27	1076.50
505	BASIN BOTTOM	928511.65	590074.51	1076.50
506	BASIN BOTTOM	928533.12	590392.95	1076.50
507	BASIN BOTTOM	928518.15	590393.85	1076.50
508	BASIN BOTTOM	928499.46	590038.16	1076.50
509	BASIN BOTTOM	928496.48	589955.47	1076.50
510	BASIN BOTTOM	928496.30	589946.37	1076.50
511	BASIN BOTTOM	928495.72	589916.38	1078.00
512	BASIN BOTTOM	928493.77	589816.28	1078.50
513	BASIN TOP	928474.27	589816.66	1082.05
514	BASIN TOP	928474.76	589841.93	1081.92
515	BASIN TOP	928475.26	589867.20	1081.79
516	BASIN TOP	928475.75	589892.47	1081.65
517	BASIN TOP	928476.24	589917.73	1081.52
518	BASIN TOP	928476.73	589943.00	1081.40
519	BASIN TOP	928477.22	589968.27	1081.27
520	BASIN TOP	928477.72	589993.54	1081.15
521	BASIN TOP	928478.21	590018.81	1081.04
522	BASIN TOP	928478.70	590044.07	1080.95
523	BASIN TOP	928479.19	590069.34	1080.89
524	BASIN TOP	928479.68	590094.61	1080.86
525	BASIN TOP	928480.18	590119.88	1080.85
526	BASIN TOP	928480.67	590145.15	1080.88
527	BASIN TOP	928481.16	590170.41	1080.93
528	BASIN TOP	928481.65	590195.68	1081.01
529	BASIN TOP	928482.14	590220.95	1081.12
530	BASIN TOP	928482.64	590246.22	1081.25
531	BASIN TOP	928483.13	590271.49	1081.42
532	BASIN TOP	928483.62	590296.76	1081.61
533	BASIN TOP	928484.11	590321.99	1081.83
534	BASIN TOP	928484.97	590345.96	1082.13
535	BASIN TOP	928485.82	590369.93	1082.47
536	BASIN TOP	928486.71	590393.33	1082.82
537	BASIN TOP	928487.53	590417.87	1083.23

POINT TABLE

POINT #	DESCRIPTION	NORTHING	EASTING	ELEVATION
538	BASIN TOP	928488.38	590441.84	1083.61
539	BASIN TOP	928500.67	590441.40	1083.56
540	BASIN TOP	928517.60	590444.83	1083.31
541	BASIN TOP	928493.05	590415.53	1082.81
542	BASIN TOP	928500.38	590422.22	1083.01
543	BASIN TOP	928509.19	590426.80	1083.06
544	BASIN TOP	928518.89	590428.87	1082.43
545	BASIN TOP	928528.79	590428.21	1083.75
546	BASIN TOP	928538.09	590424.77	1083.70
547	BASIN TOP	928545.97	590418.76	1083.65
548	BASIN TOP	928551.66	590410.65	1083.60
549	BASIN TOP	928554.51	590401.16	1083.56
550	STUCTURE	928506.10	590412.56	1081.00
551	STUCTURE	928510.42	590414.63	1078.50
552	STUCTURE	928514.03	590416.35	1078.50
553	STUCTURE	928518.36	590418.42	1081.00
554	STUCTURE	928506.73	590420.62	1078.50
555	STUCTURE	928511.69	590422.99	1078.50
601	BASIN BOTTOM	927289.53	591366.34	1064.50
602	BASIN BOTTOM	927290.19	591390.33	1064.50
603	BASIN BOTTOM	927300.67	591422.10	1064.50
604	BASIN BOTTOM	927301.12	591437.33	1064.50
605	BASIN BOTTOM	927291.68	591440.61	1064.50
606	BASIN BOTTOM	927294.98	591550.26	1064.50
607	BASIN BOTTOM	927282.38	591563.64	1064.50
608	BASIN BOTTOM	927258.39	591564.35	1064.50
609	BASIN BOTTOM	927245.01	591551.75	1064.50
610	BASIN BOTTOM	927239.55	591367.83	1064.50
611	BASIN BOTTOM	927252.16	591354.45	1064.50
612	BASIN BOTTOM	927276.15	591353.74	1064.50
613	BASIN TOP	927324.04	591366.36	1076.00
614	BASIN TOP	927324.67	591389.31	1076.00
615	BASIN TOP	927335.16	591421.08	1076.00
616	BASIN TOP	927338.86	591545.96	1076.00
617	BASIN TOP	927329.42	591549.24	1076.00
618	BASIN TOP	927283.40	591598.13	1076.00
619	BASIN TOP	927259.41	591598.84	1076.00
620	BASIN TOP	927210.52	591552.77	1076.00
621	BASIN TOP	927205.06	591368.85	1076.00
622	BASIN TOP	927251.13	591319.96	1076.00
623	BASIN TOP	927275.12	591319.25	1076.00
624	ACCESS ROAD	927347.54	591364.62	1076.47
625	ACCESS ROAD	927353.00	591548.54	1076.47
626	ACCESS ROAD	927293.35	591611.84	1076.29
627	ACCESS ROAD	927259.83	591612.83	1076.28
628	ACCESS ROAD	927196.53	591553.18	1076.28
629	ACCESS ROAD	927191.07	591369.27	1076.28
630	ACCESS ROAD	927250.72	591305.97	1076.28
631	ACCESS ROAD	927284.24	591304.97	1076.29
1056	BASIN BOTTOM	928526.09	590400.95	1076.50

Contact Arizona 811 Two Working Days Before You Dig
Call 811 or Click Arizona811.com

NO.	REVISION	BY	DATE
3			
2			
1			

MARICOPA COUNTY

NORTHERN PARKWAY
103RD AVENUE TO 91ST AVENUE - PHASE 1
PROJECT NO. TT0372

	BY	DATE
DESIGNED	BF	5/6/2026
DRAWN	BF, JW, MM, AB, GT	5/6/2026
CHECKED	JH	5/6/2026

Registered Professional Engineer (Civil) CERTIFICATE NO. 62327 WILLIAM FOGELL Date Signed 05/06/26 ARIZONA U.S.A.

J2 Design

DRAINAGE
COORDINATE GEOMETRY

SHEET DR10

TRACS NO.

c:\bmstyl\i-pw\iwotring__j2design\0573068\TT0372_SC_Drainage_Plan_08-cogo points.dgn OpenRoads_Imperial 10:40:57 PM 5/7/2026 MCDOT_TYLIN_PRINT.tbl TYLI_GN_bwpdf.pltcfg

FEDERAL AID PROJECT NO.	STATE	PROJECT NO.	SHEET NO.	TOTAL SHEETS	RECORD DRAWING
9	AZ	TT0372	55	224	

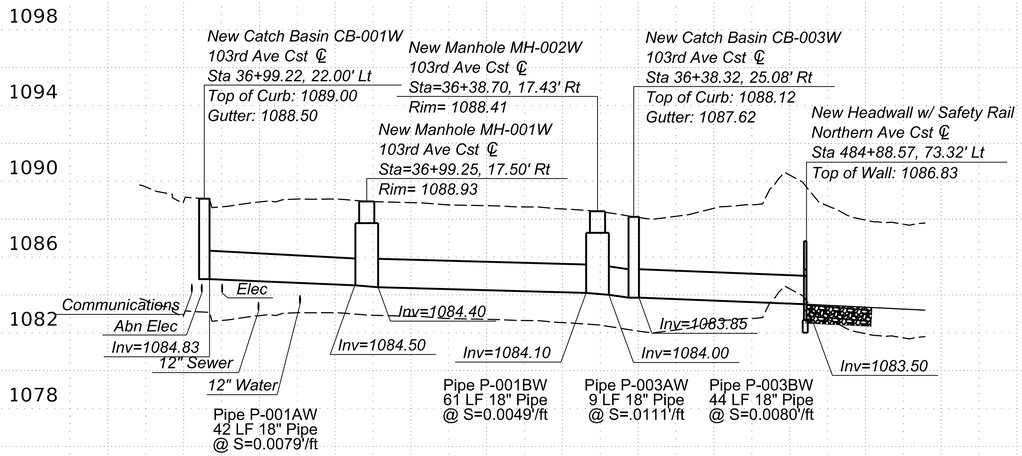

103RD AVE
STA 36+38
(SHEET DR01)

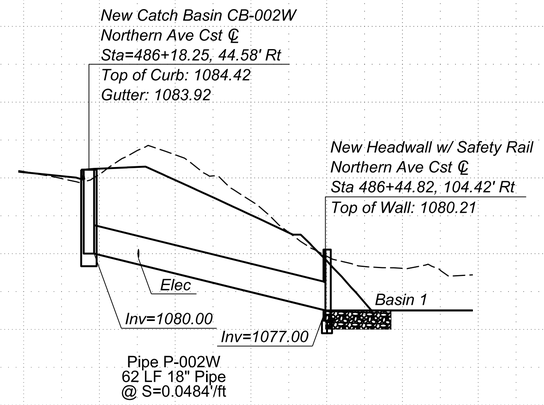

NORTHERN AVE
STA 486+18
(SHEET DR01)

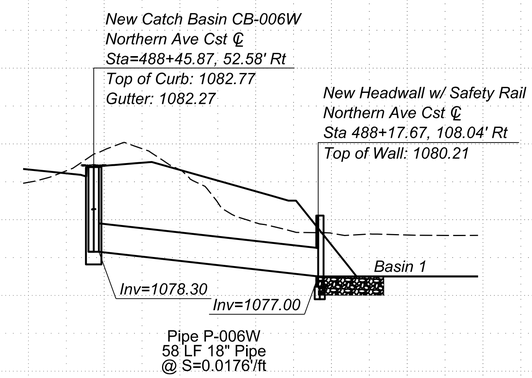

NORTHERN AVE
STA 488+46
(SHEET DR01 & DR02)

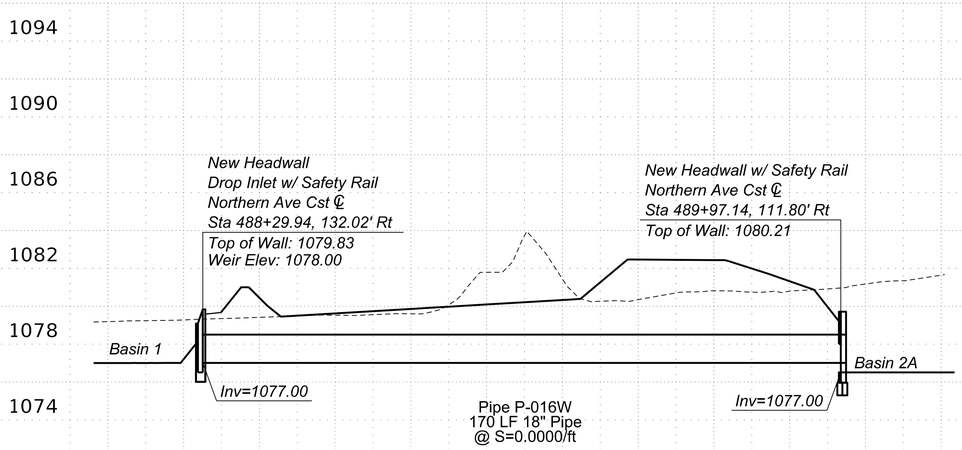

NORTHERN AVE
STA 488+30 to STA 489+97
(SHEET DR01 & DR02)

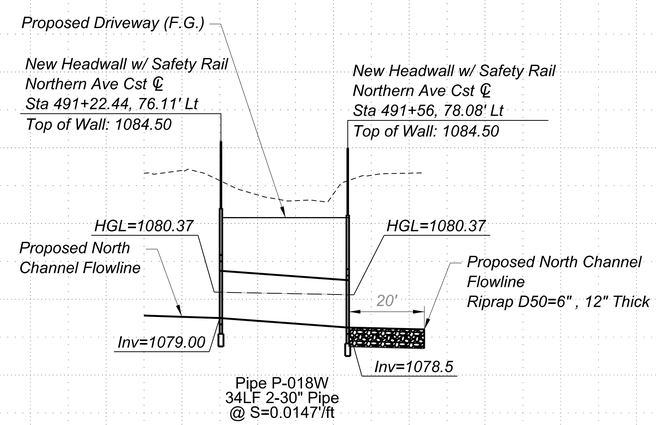

NORTHERN AVE
STA 491+20 to STA 491+54
(SHEET DR02)

SCALE: Hor: 1"=20'
Vert: 1"=4'
20 0 20 40
SCALE IN FEET

NO.	REVISION	BY	DATE
3			
2			
1			

MARICOPA COUNTY

NORTHERN PARKWAY
103RD AVENUE TO 91ST AVENUE - PHASE 1
PROJECT NO. TT0372

	BY	DATE
DESIGNED	BF	5/6/2026
DRAWN	BF, JW, MM, AB, GT	5/6/2026
CHECKED	JH	5/6/2026

Registered Professional Engineer (Civil) CERTIFICATE NO. 62327 WILLIAM FOGELL Date Signed 05/06/26 ARIZONA U.S.A.

J2 Design

NORTHERN AVE STORM DRAIN PROFILES

SHEET DP01

TRACS NO:

TYLI_GN_bwpdf.pltcfg
TYLIN_PRINT.tbl
5/7/2026 11:00:01 PM
OpenRoads_Imperial

FEDERAL AID PROJECT NO.	STATE	PROJECT NO.	SHEET NO.	TOTAL SHEETS	RECORD DRAWING
9	AZ	TT0372	56	224	

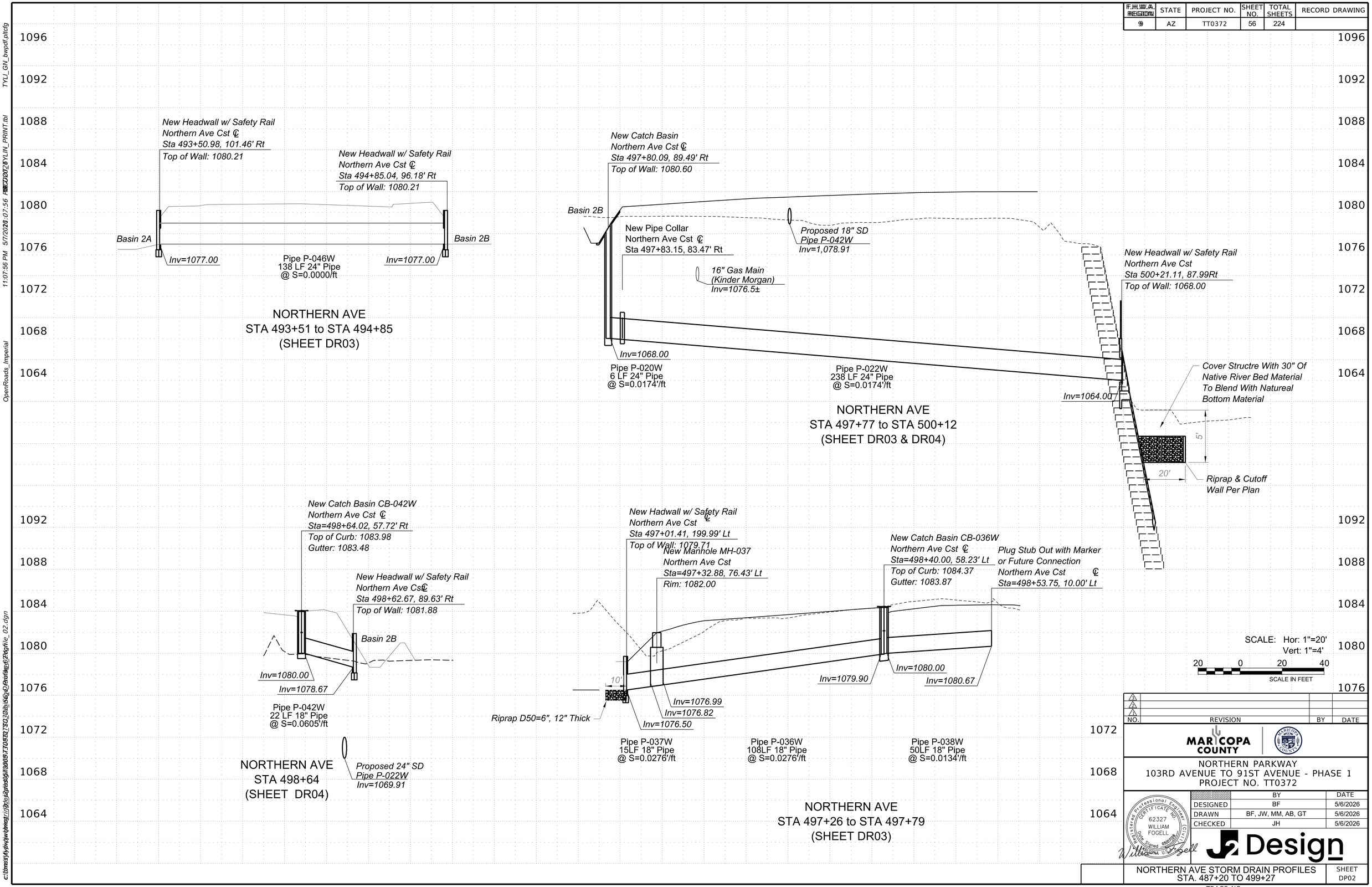

NO.	REVISION	BY	DATE
3			
2			
1			

MARICOPA COUNTY

NORTHERN PARKWAY
103RD AVENUE TO 91ST AVENUE - PHASE 1
PROJECT NO. TT0372

	BY	DATE
DESIGNED	BF	5/6/2026
DRAWN	BF, JW, MM, AB, GT	5/6/2026
CHECKED	JH	5/6/2026

Registered Professional Engineer (Civil) CERTIFICATE NO. 62327 WILLIAM FOGELL Date Signed 05/07/26 Arizona U.S.A.

J2 Design

NORTHERN AVE STORM DRAIN PROFILES
STA. 487+20 TO 499+27

SHEET DP02

TRACS NO.

TYLI_GN_bwpdf.pltcfg
TYLIN_PRINT.tbl
5/7/2026 11:07:56 PM
OpenRoads_Imperial
c:\Users\jfyfyfy

FEDERAL AID PROJECT NO.	STATE	PROJECT NO.	SHEET NO.	TOTAL SHEETS	RECORD DRAWING
9	AZ	TT0372	57	224	

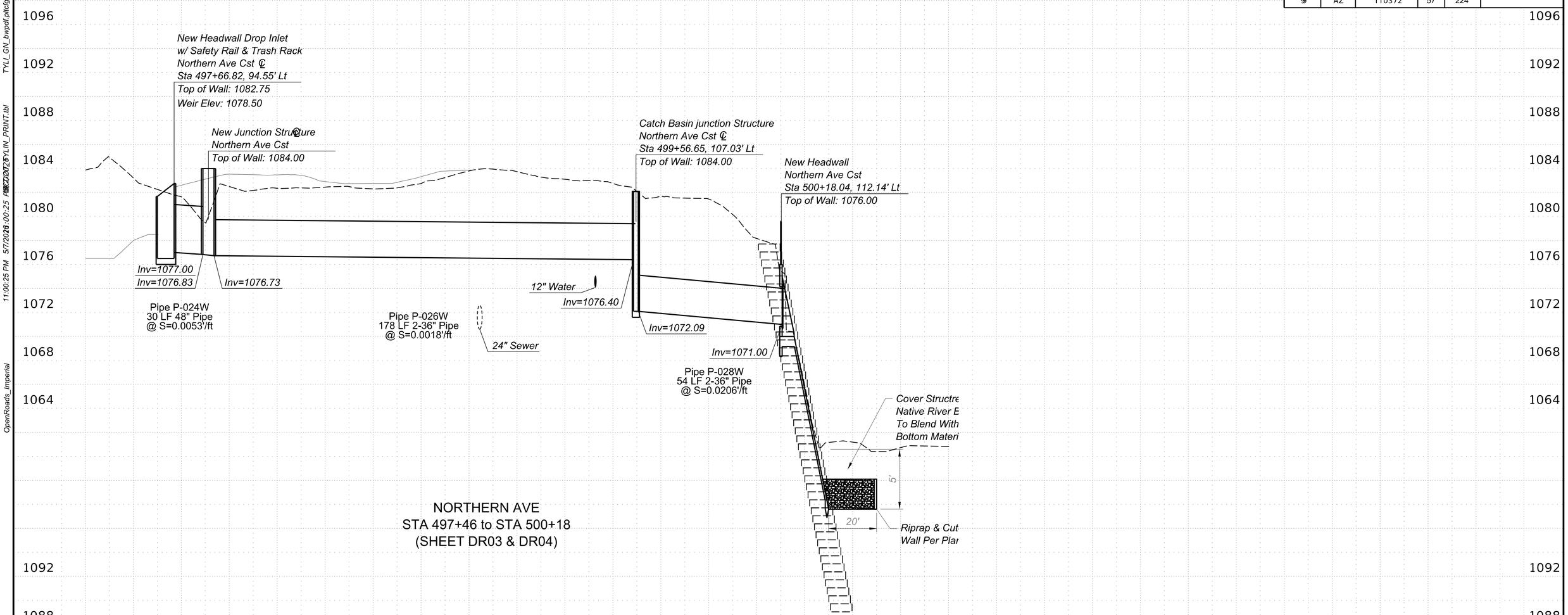

NORTHERN AVE
STA 497+46 to STA 500+18
(SHEET DR03 & DR04)

SCALE: Hor: 1"=20'
Vert: 1"=4'

20 0 20 40
SCALE IN FEET

NO.	REVISION	BY	DATE
3			
2			
1			

MARICOPA COUNTY

NORTHERN PARKWAY
103RD AVENUE TO 91ST AVENUE - PHASE 1
PROJECT NO. TT0372

	BY	DATE
DESIGNED	BF	5/6/2026
DRAWN	BF, JW, MM, AB, GT	5/6/2026
CHECKED	JH	5/6/2026

Registered Professional Engineer (Civil)
CERTIFICATE NO. 62327
WILLIAM FOGELL
Date Signed 05/07/26
State of Arizona, U.S.A.

J2 Design

NORTHERN AVE STORM DRAIN PROFILES
STA. 487+20 TO 499+27

SHEET DP03

TRACS NO.

TYLI_GN_bwpdf.pltcfg
TYLIN_PRINT.tbl
5/7/2026 11:00:25 PM
OpenRoads_Imperial
c:\users\jwyatt\appdata\local\bentley\openroads\10.00\temp\tt0372_30\profile_03.dgn

FEDERAL AID PROJECT NO.	STATE	PROJECT NO.	SHEET NO.	TOTAL SHEETS	RECORD DRAWING
9	AZ	TT0372	58	224	

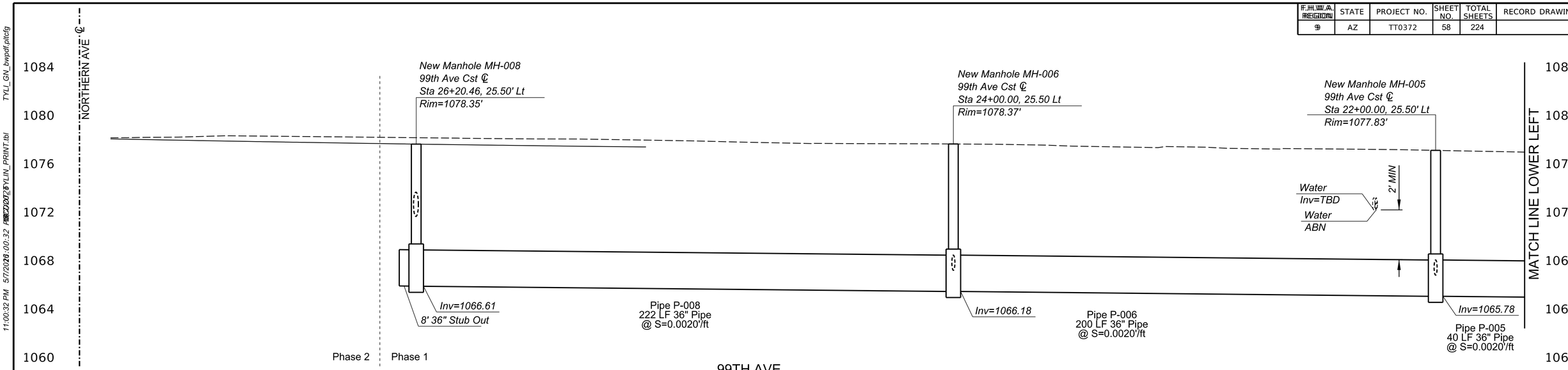

99TH AVE
STA 21+60 to STA 26+21
(SHEET DR08 & DR09)

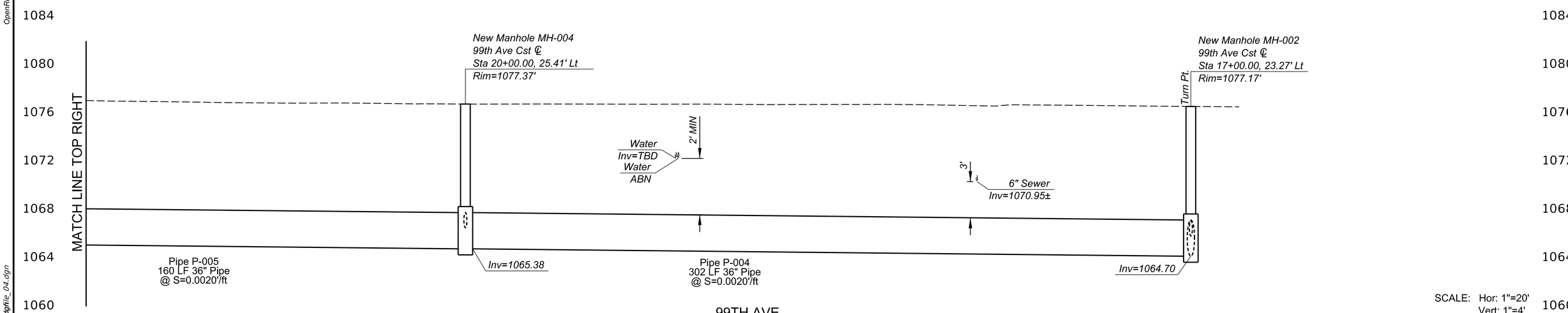

99TH AVE
STA 17+00 to STA 21+60
(SHEET DR06 & DR07)

SCALE: Hor: 1"=20'
Vert: 1"=4'

20 0 20 40
SCALE IN FEET

NO.	REVISION	BY	DATE
3			
2			
1			

MARICOPA COUNTY

NORTHERN PARKWAY
103RD AVENUE TO 91ST AVENUE - PHASE 1
PROJECT NO. TT0372

	BY	DATE
DESIGNED	BF	5/6/2026
DRAWN	BF, JW, MM, AB, GT	5/6/2026
CHECKED	JH	5/6/2026

Registered Professional Engineer (Civil) CERTIFICATE NO. 62327 WILLIAM FOGELL Date Signed 05/07/26 Arizona U.S.A.

J2 Design

99TH AVE STORM DRAIN PROFILES
STA. 27+06 to 16+31

SHEET DP04

TRACS NO.

TYLI_GN_bwpdf.pltcfg
11:00:32 PM 5/7/2026 11:00:32 PM
OpenRoads_Imperial

FEDERAL AID PROJECT NO.	STATE	PROJECT NO.	SHEET NO.	TOTAL SHEETS	RECORD DRAWING
9	AZ	TT0372	59	224	

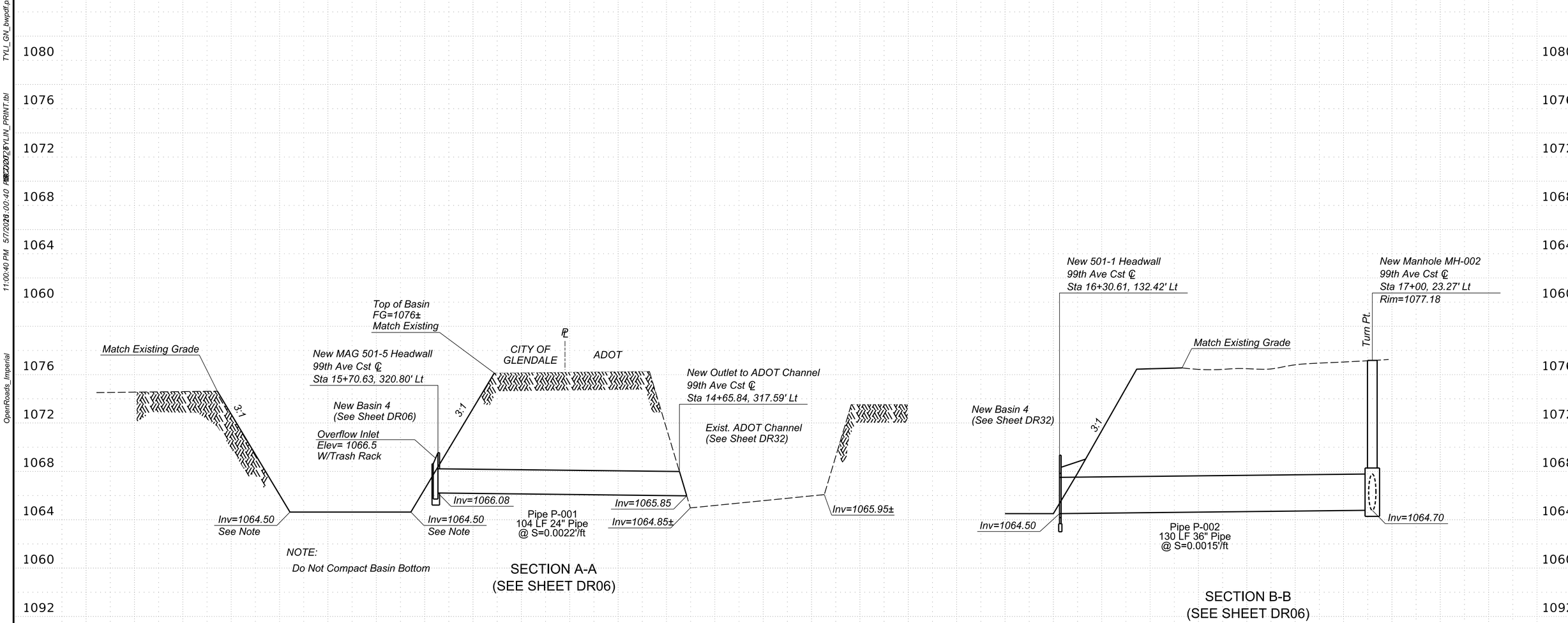

SECTION A-A
(SEE SHEET DR06)

SECTION B-B
(SEE SHEET DR06)

SCALE: Hor: 1"=20'
Vert: 1"=4'

20 0 20 40
SCALE IN FEET

Notes:

1) See Sheet DR35, Detail D1 Pipe Protection
2) Provide Extra Protection for Utility Clearances Per Utility & City of Peoria requirements. Otherwise, Relocate Utility Per Established Criteria.
3) Encase Water & SD Pipe Per MAG Dtl 404.

NO.	REVISION	BY	DATE
3			
2			
1			

MARICOPA COUNTY

NORTHERN PARKWAY
103RD AVENUE TO 91ST AVENUE - PHASE 1
PROJECT NO. TT0372

	BY	DATE
DESIGNED	BF	5/6/2026
DRAWN	BF, JW, MM, AB, GT	5/6/2026
CHECKED	JH	5/6/2026

Registered Professional Engineer (Civil) CERTIFICATE NO. 62327 WILLIAM FOGELL Date Signed 5/6/2026 Arizona U.S.A.

JR Design

99th AVE STORM DRAIN PROFILES
Sta. 20+20.71 to 16+31

SHEET DP05

TRACS NO.

TYLI_GN_bwpdf.pltcfg
11:00:40 PM 5/7/2026 FRI 2026/05/07 TYLIN_PRINT.tbl
OpenRoads_Imperial
c:\users\jwilkins\appdata\local\bentley\openroads connect edition\workspaces\bentleydefaultworkspace\projects\tt0372\3d_model\dgn\tt0372_3d_model_05.dgn

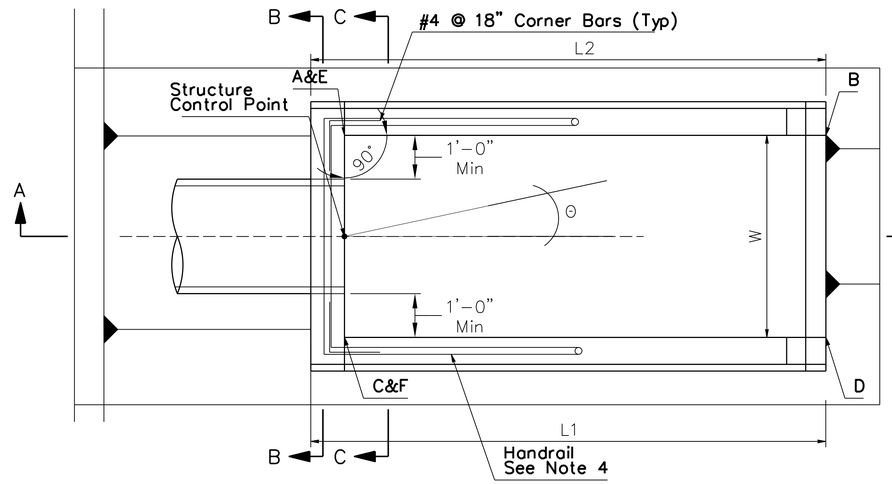

1 OUTLET PLAN
N.T.S.

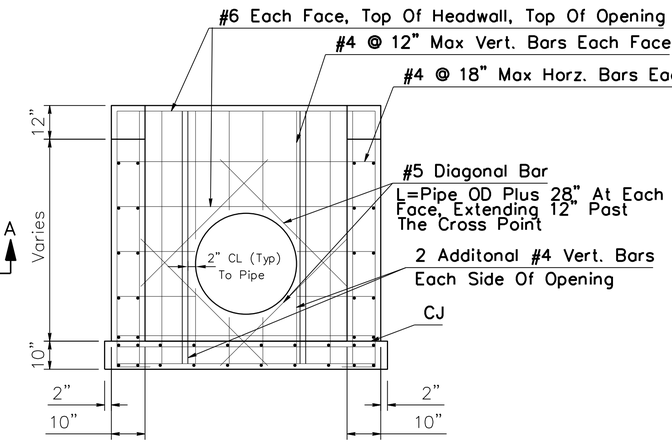

SECTION B-B
N.T.S.

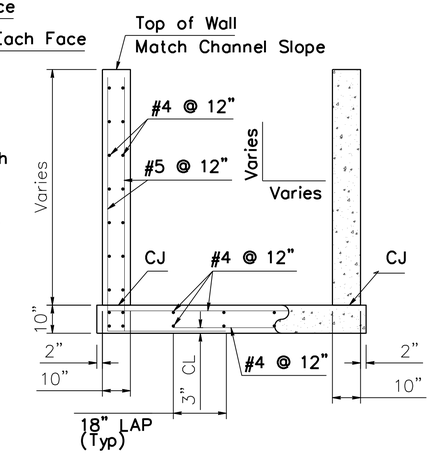

SECTION C-C
N.T.S.

NOTE:

1. All Concrete Shall be Class S (fc=3000 psi)
2. All Reinforcing Steel Shall Conform to ASTM A615/A615m-96a Grade 60
3. All Reinforcing Steel Shall Have 2 Inch Clear Cover Unless Noted Otherwise
4. Handrail Shall Extend Down Headwall to Where Wall Height is Less than 48 Inches

Table 1: Outlet Headwall Dimensions

Pipe Out	X	Θ	L1	L2	W	A	B	C	D	E	F
Barrels	IN	DEG	FT	FT	FT	ELEV	ELEV	ELEV	ELEV	ELEV	ELEV
1	36	0	5.8	5.8	5.0	75.67	70.93	75.67	70.93	71.00	71.00
2	36	0	6.0	6.0	9.5	75.67	70.93	75.67	70.93	71.00	71.00

Notes for Table:
Angle Θ is the angle between a line perpendicular to channel PGL and storm drain pipe centerline; both passing through the Structure Control Point.

Points A and C are at the top of the wingwall; E and F are at the bottom.

CJ = Cold Joint

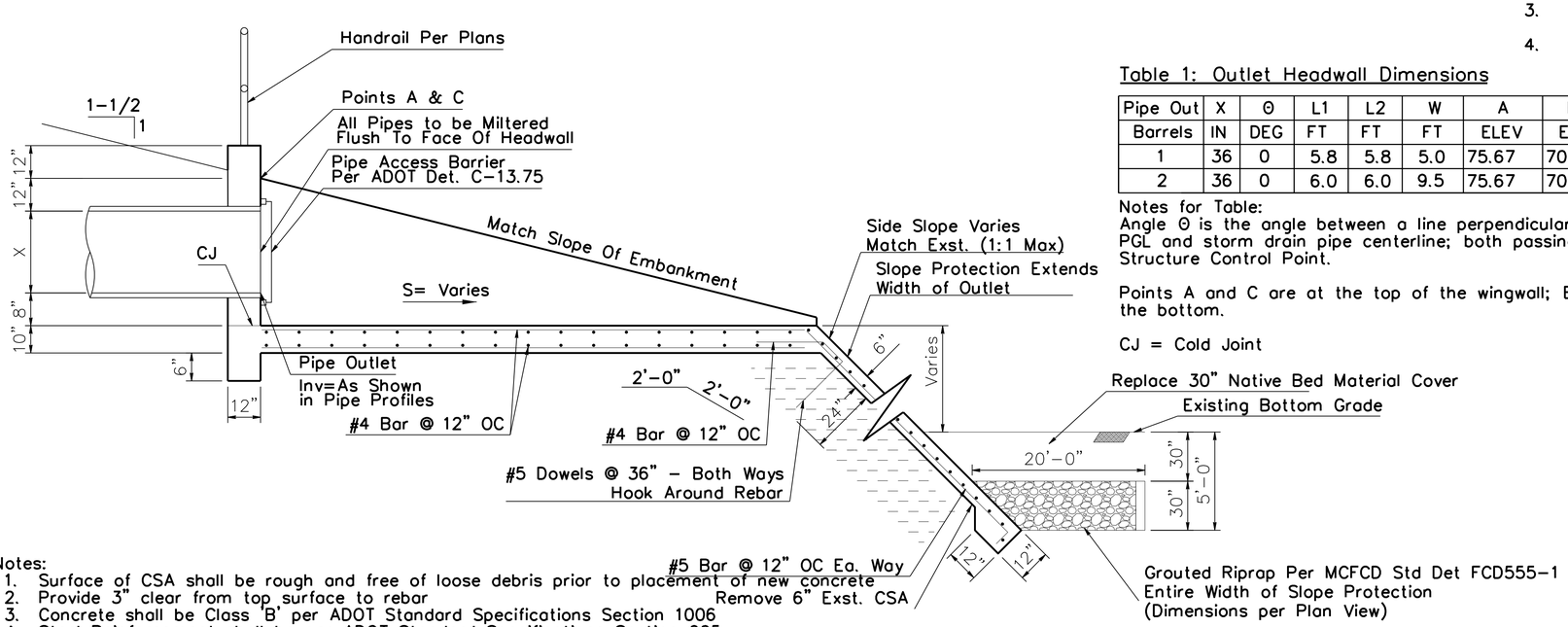

Notes:
1. Surface of CSA shall be rough and free of loose debris prior to placement of new concrete
2. Provide 3" clear from top surface to rebar
3. Concrete shall be Class 'B' per ADOT Standard Specifications Section 1006
4. Steel Reinforcement shall be per ADOT Standard Specifications Section 605
5. Dowels shall be per ADOT Standard Specifications Section 605-3.04
6. Grout Strength = 2,500 psi

SECTION A-A
N.T.S.

DETAIL D1

OUTLET HEADWALL DETAILS

Contact Arizona 811 Two Working Days Before You Dig
Call 811 or Click Arizona811.com

NO.	REVISION	BY	DATE
3			
2			
1			

MARICOPA COUNTY

NORTHERN PARKWAY
103RD AVENUE TO 91ST AVENUE - PHASE 1
PROJECT NO. TT0372

	BY	DATE
DESIGNED	BF	5/6/2026
DRAWN	BF, JW, MM, AB, GT	5/6/2026
CHECKED	JH	5/6/2026

Registered Professional Engineer (Civil) CERTIFICATE NO. 62327 WILLIAM FOGELL STATE OF ARIZONA
Date Signed 05/06/26
William Fogell

J2 Design

DRAINAGE DETAIL D1
OUTLET HEAD WALL

SHEET DT01

TRACS NO.

TYLI_GN_bwpdf.pltcfg
MCDOT_TYLIN_PRINT.tbl
10:41:57 PM 5/7/2026
OpenRoads_Imperial
c:\bmstyli-pw\jwotring__j2design\d0573068\TT0372_SC_Drainage_Detail_01.dgn

F.H.W.A. REGION	STATE	PROJECT NO.	SHEET NO.	TOTAL SHEETS	RECORD DRAWING
9	AZ	TT0372	61	224	

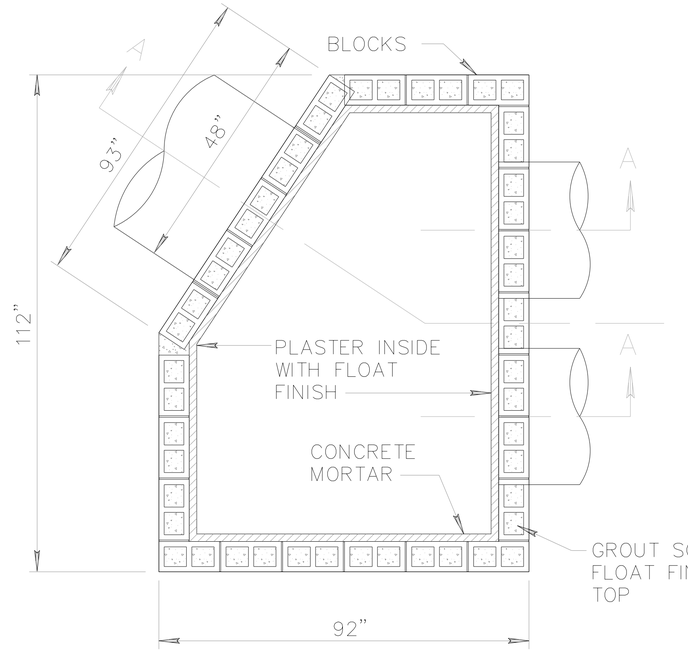

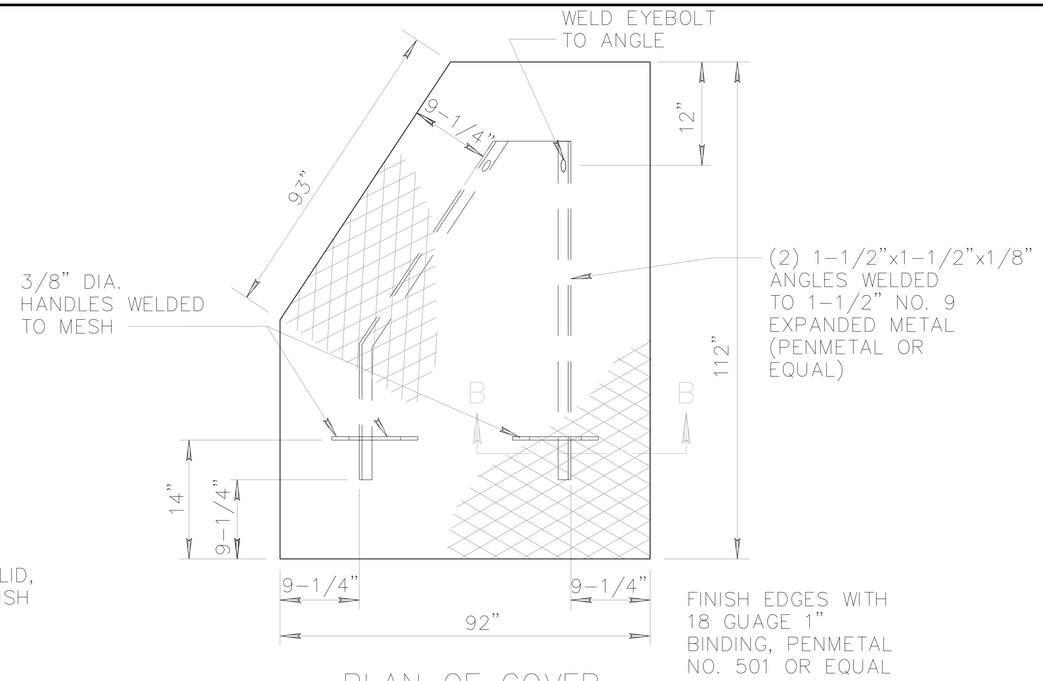

PLAN OF COVER

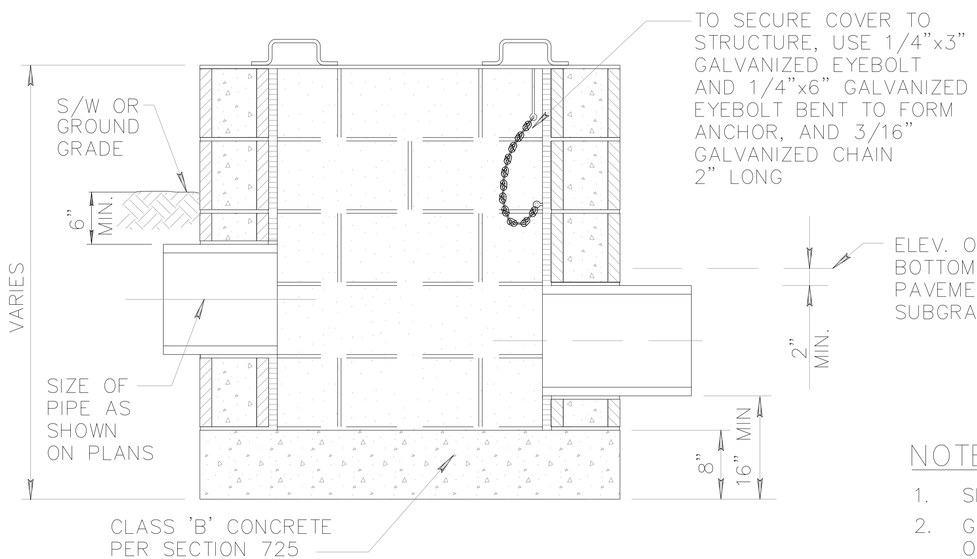

SECTION A–A

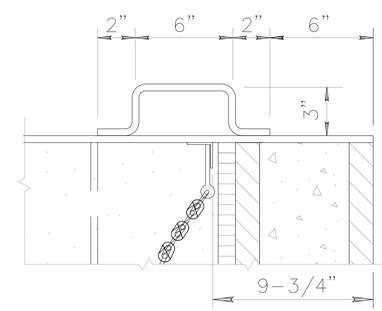

SECTION B–B

NOTES:

1. SIZE OF JUNCTION BOX TO BE DETERMINED BY THE ENGINEER.
2. GATE TYPE, SIZE AND NUMBER REQUIRED AS SHOWN ON PLANS OR AS SPECIFIED.
3. CONCRETE MASONRY UNITS (BLOCK) PER SECT. 510, 775 & 776

Contact Arizona 811 Two Working Days Before You Dig
ARIZONA811 BLUE STAKE, INC.
Call 811 or Click Arizona811.com

NO.	REVISION	BY	DATE
3			
2			
1			

MARICOPA COUNTY

NORTHERN PARKWAY
103RD AVENUE TO 91ST AVENUE - PHASE 1
PROJECT NO. TT0372

	BY	DATE
DESIGNED	BF	5/6/2026
DRAWN	BF, JW, MM, AB, GT	5/6/2026
CHECKED	JH	5/6/2026

Registered Professional Engineer (Civil) CERTIFICATE NO. 62327 WILLIAM FOGELL STATE OF ARIZONA Date Signed 5/6/26

J2 Design

DETAIL D2

JUNCTION STRUCTURE

DRAINAGE DETAIL D2
JUNCTION STRUCTURE

SHEET DT02

TRACS NO.

c:\bmstyli-pw\jwotring__j2design\d0573068\TT0372_SC_Drainage_Detail_02.dgn
OpenRoads_Imperial 10:42:03 PM 5/7/2026 MCDOT_TYLIN_PRINT.tbl TYLI_GN_bwpdf.pltcfg

F.H.W.A. REGION	STATE	PROJECT NO.	SHEET NO.	TOTAL SHEETS	RECORD DRAWING
9	AZ	TT0372	62	224	

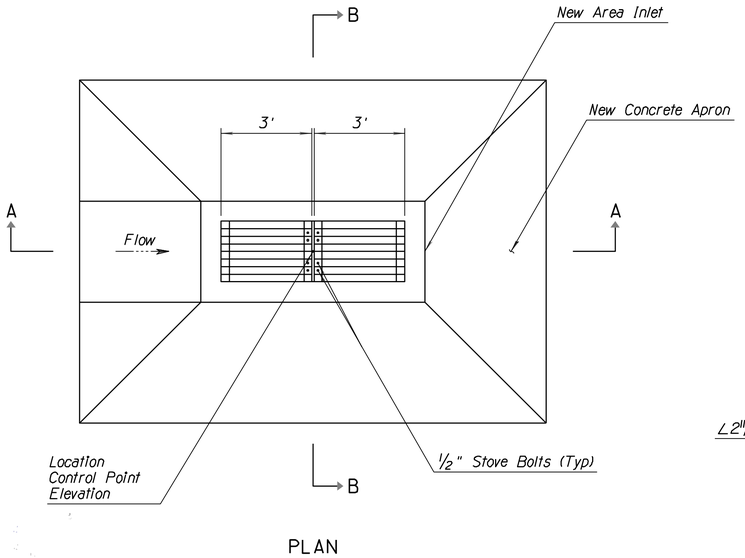

PLAN

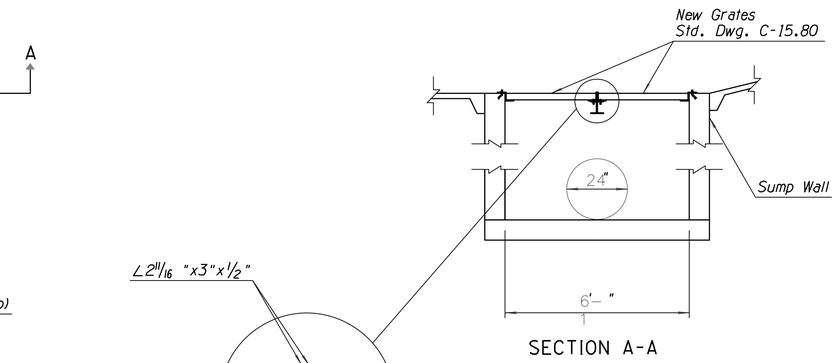

SECTION A-A

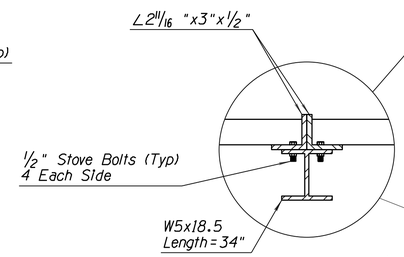

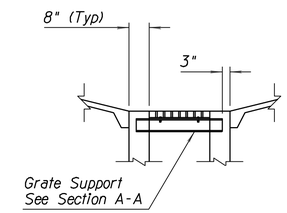

SECTION B-B

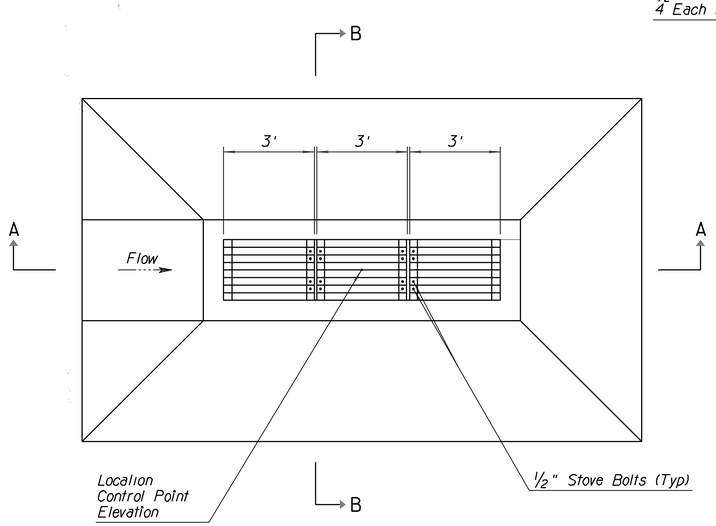

PLAN

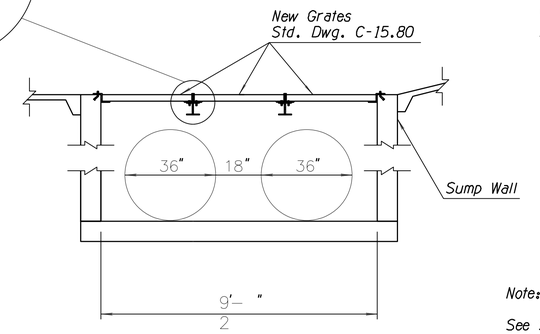

SECTION A-A

Note:

See Std. Dwg. C-15.80 for all dimensions, details and notes not shown on this detail.

Contact Arizona 811 Two Working Days Before You Dig
Call 811 or Click Arizona811.com

NO.	REVISION	BY	DATE
3			
2			
1			

MARICOPA COUNTY

NORTHERN PARKWAY
103RD AVENUE TO 91ST AVENUE - PHASE 1
PROJECT NO. TT0372

	BY	DATE
DESIGNED	BF	5/6/2026
DRAWN	BF, JW, MM, AB, GT	5/6/2026
CHECKED	JH	5/6/2026

Registered Professional Engineer (Civil) CERTIFICATE NO. 62327 WILLIAM FOGELL Date Signed 05/07/26 Arizona U.S.A.

J2 Design

DETAIL D3

DOUBLE AND TRIPLE GRATE AREA INLET

DRAINAGE DETAIL D3
JUNCTION STRUCTURE

SHEET DT03

TRACS NO.

c:\bmstyli-pw\jwotring__j2design\d0573068\TT0372_SC_Drainage_Detail_03.dgn
OpenRoads_Imperial 10:42:10 PM 5/7/2026 MCDOT_TYLIN_PRINT.tbl TYLI_GN_bwpdf.pltcfg

F.H.W.A. REGION	STATE	PROJECT NO.	SHEET NO.	TOTAL SHEETS	RECORD DRAWING
9	AZ	TT0372	63	224	

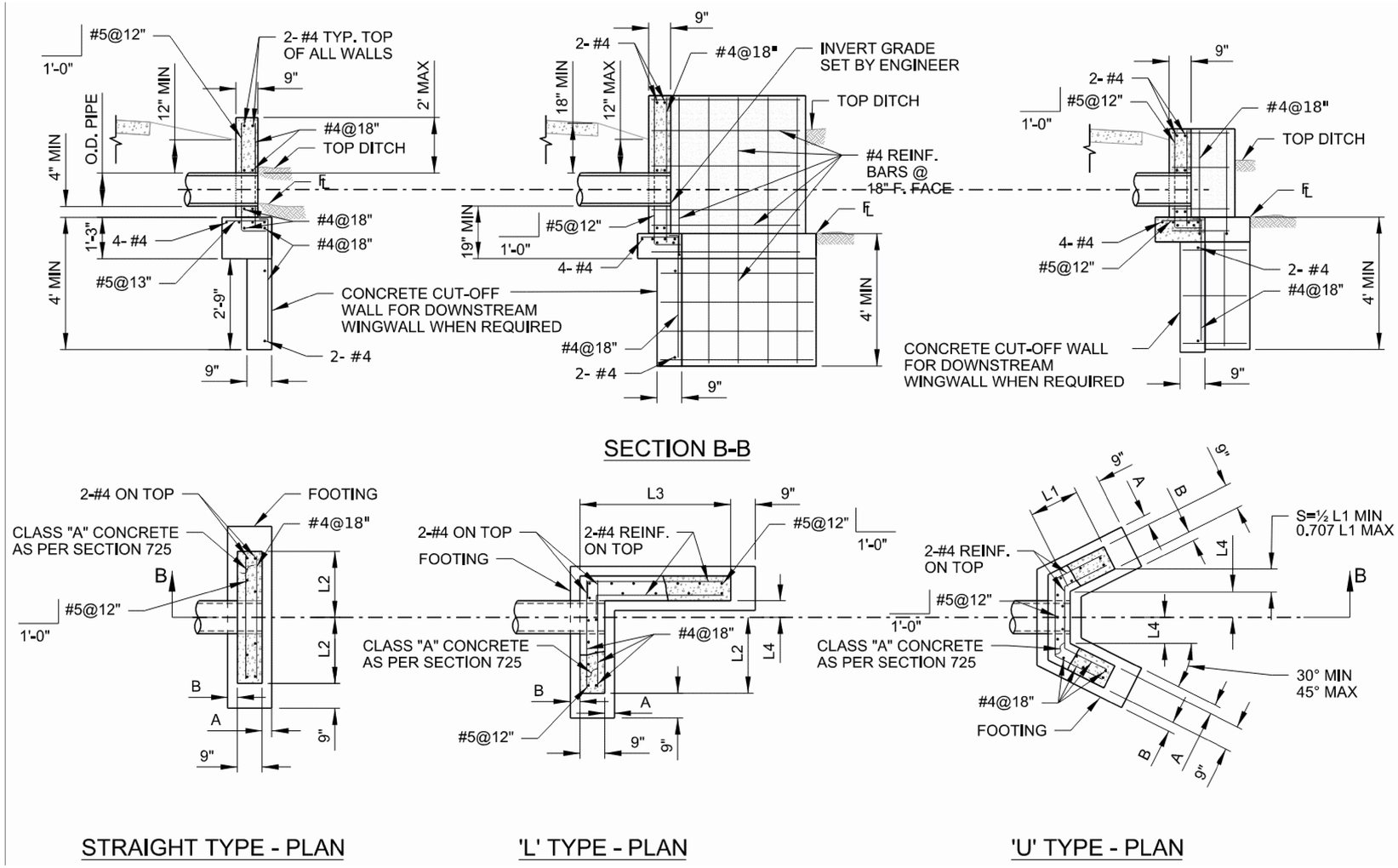

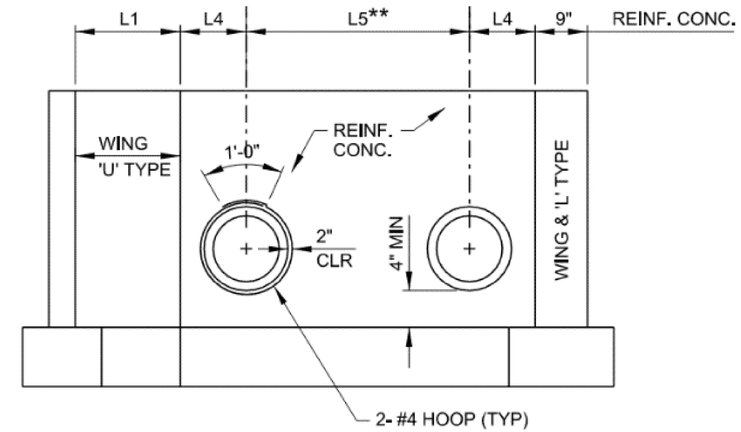

DOUBLE PIPE HEADWALL

Modified Dimensions

Pipe Size	L1	L2
18"	8'-0"	12'-0"
24"	8'-0"	N/A
36"	8'-0"	N/A
2-30"	N/A	15'-0"

DETAIL D4

HEADWALL WINGWALL MODIFICATION

Contact Arizona 811 Two Working Days Before You Dig
Call 811 or Click Arizona811.com

NO.	REVISION	BY	DATE
3			
2			
1			

MARICOPA COUNTY

NORTHERN PARKWAY
103RD AVENUE TO 91ST AVENUE - PHASE 1
PROJECT NO. TT0372

	BY	DATE
DESIGNED	BF	5/6/2026
DRAWN	BF, JW, MM, AB, GT	5/6/2026
CHECKED	JH	5/6/2026

Registered Professional Engineer (Civil) CERTIFICATE NO. 62327 WILLIAM FOGELL Date Signed 05/06/26 Arizona U.S.A.

J2 Design

DRAINAGE DETAIL
HEADWALL WINGWALLS

SHEET DT04

TRACS NO.

c:\bmsltyl\-pw\jwotring__j2design\0573068\TT0372_SC_Drainage_Detail_04.dgn
OpenRoads_Imperial 10:42:16 PM 5/7/2026 MCDOT_TYLIN_PRINT.tbl TYLI_GN_bwpdf.pltcfg

F.H.W.A. REGION	STATE	PROJECT NO.	SHEET NO.	TOTAL SHEETS	RECORD DRAWING
9	AZ	TT0372	64	224	

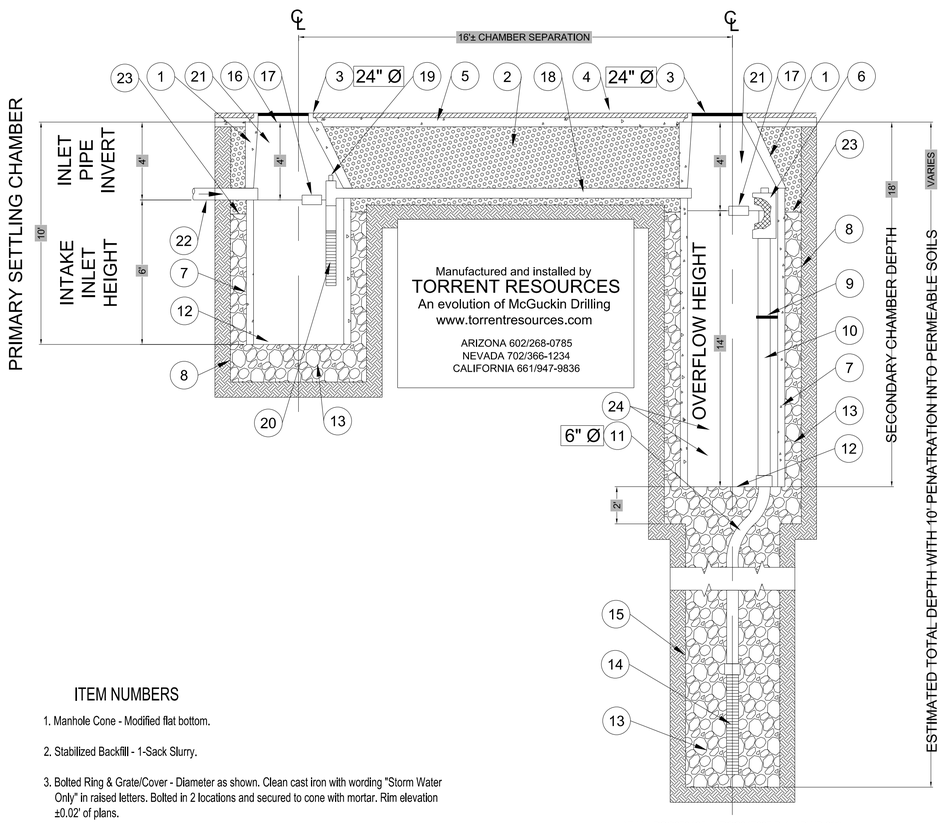

NOTES:
DURING CONSTRUCTION, ONCE THE BASINS HAVE BEEN GRADED AND A DRYWELL INSTALLED, THE CONTRACTOR WILL PERFORM A PERCOLATION TEST AND PROVIDE A CERTIFIED SOILS REPORT WITH ACTUAL DRYWELL DISPOSAL RATES AND SURFACE PERMEABILITY RATES. THE CERTIFIED SOILS REPORT AND REVISED DRY-UP CALCULATIONS SHALL BE SUBMITTED DIRECTLY TO THE ASSIGNED FIELD INSPECTOR FOR REVIEW AND APPROVAL.

THE CONTRACTOR/DEVELOPER SHALL BE RESPONSIBLE FOR REGISTERING THE DRY WELLS SHOWN ON THE GRADING AND DRAINAGE PLAN.

DRY WELLS MUST BE DRILLED A MINIMUM OF 10 FEET INTO PERMEABLE POROUS STRATA OR PERCOLATION TESTS WILL BE REQUIRED. THE GRADING AND DRAINAGE INSPECTOR MUST BE PRESENT BEFORE BACKFILL OR WELL PIPES ARE PLACED WITHIN ANY DRY WELLS.

THE CONTRACTOR/DEVELOPER IS RESPONSIBLE FOR INSTALLING ADDITIONAL DRY WELLS SHOULD THE LOCALIZED RETENTION BASINS FAIL TO DRAIN WITHIN 36 HOURS.

DEPTH VARIES PER SOIL TYPE CONDITIONS.

ITEM NUMBERS

1. Manhole Cone - Modified flat bottom.
2. Stabilized Backfill - 1-Sack Slurry.
3. Bolted Ring & Grate/Cover - Diameter as shown. Clean cast iron with wording "Storm Water Only" in raised letters. Bolted in 2 locations and secured to cone with mortar. Rim elevation ±0.02' of plans.
4. Graded Basin or Paving (by Others).
5. Compacted Base Material (by Others).
6. PureFlo® Debris Shield - Rolled 16 Ga. steel X 24" length with vented anti-siphon and internal .265" Mas. SW0 flattened expanded steel screen X 12" length. Fusion bonded epoxy coated.
7. Pre-cast Liner - 4000 PSI concrete 48" ID. X 54" OD. Center in hole and align sections to maximize bearing surface.
8. Min. 6' Ø Drilled Shaft.
9. Support Bracket - Formed 12 Ga. steel . Fusion bonded epoxy coated.
10. Overflow Pipe - Sch. 40 PVC mated to drainage pipe at base seal.
11. Drainage Pipe-ADS highway grade with TRI-A coupler. Suspend pipe during backfill operations to prevent buckling or breakage. Diameter as noted.
12. Base Seal - Geotextile or concrete slurry.
13. Rock-Washed, sized between 3.8" and 1-1/2" to best complement soil conditions.
14. FloFast® Drainage screen - Sch. 40 PVC 0.120" slotted well screen with 32 slots per row/ft. Diameter varies 120" overall length with TRI-B coupler.
15. Min. 4' Ø Shaft - Drilled to maintain permeability of drainage soils.
16. Fabric Seal - U.V. Resistant Geotextile - To be removed by customer at project completion
17. Absorbent - Hydrophobic Petrochemical Sponge. Min 128 oz. capacity.
18. Connector Pipe - 4" Ø Sch. 40 PVC.
19. Anti-Siphon Vent with flow regulator.
20. Intake Screen - Sch. 40 PVC 0.120" modified slotted well screen with 32 slots per row/ft. 48" overall length with TRI-C end cap.
21. Freeboard Depth Varies with inlet pipe elevation. Increase primary/secondary settling chamber depths as needed to maintain all inlet pipe elevations above connector pipe overflow.
22. Optional Inlet Pipe (by Others).
23. Moisture Membrane - 6 mil. Plastic. Place securely against eccentric cone and hole sidewall. Used in lieu of slurry in landscaped areas.
24. Eight - (8) perforations per foot, 2 row minimum.

DETAIL D5

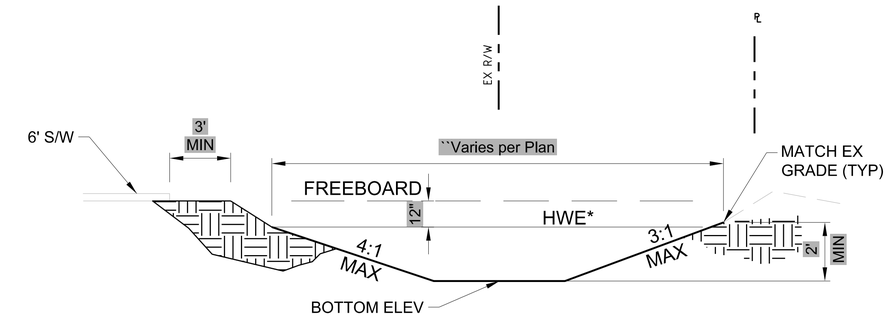

1 TYPICAL SECTION - NORTH CHANNEL

NTS

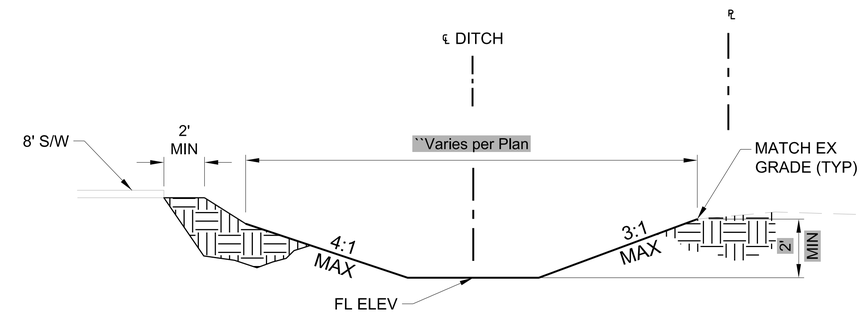

2 TYPICAL SECTION - BASIN 2

NTS

DETAIL D6

Contact Arizona 811 Two Working Days Before You Dig
Call 811 or Click Arizona811.com

NO.	REVISION	BY	DATE
3			
2			
1			

MARICOPA COUNTY

NORTHERN PARKWAY
103RD AVENUE TO 91ST AVENUE - PHASE 1
PROJECT NO. TT0372

	BY	DATE
DESIGNED	BF	5/6/2026
DRAWN	BF, JW, MM, AB, GT	5/6/2026
CHECKED	JH	5/6/2026

Registered Professional Engineer (Civil) CERTIFICATE NO. 62327 WILLIAM FOGELL Date Signed 05/07/26 Arizona U.S.A.

J2 Design

DRAINAGE DETAIL
DRYWELL AND SECTIONS

SHEET DT05

TRACS NO.

c:\bmstyli-pw\jwotring__j2design\d0573068\TT0372_SC_Drainage_Detail_05.dgn
OpenRoads_Imperial 10:42:27 PM 5/7/2026 MCDOT_TYLIN_PRINT.tbl TYLI_GN_bwpdf.pltcfg

F.H.W.A. REGION	STATE	PROJECT NO.	SHEET NO.	TOTAL SHEETS	RECORD DRAWING
9	AZ	TT0372	65	224	

NOTES:

1) Remove all scale from rack bars. Metal spray or paint with one coat zinc chromate or red lead primer (industrial quality). Overcoat with grey industrial enamel sect. 1002-4.

2) Steel to be ASTM A36/A 36M.

3) Cost of Trash Rack shall be considered incidental to the cost of the Drop Inlet.

4) See MAG Std Dtl 501-5 For All Dimensions, Details And Notes Not Shown On This Detail

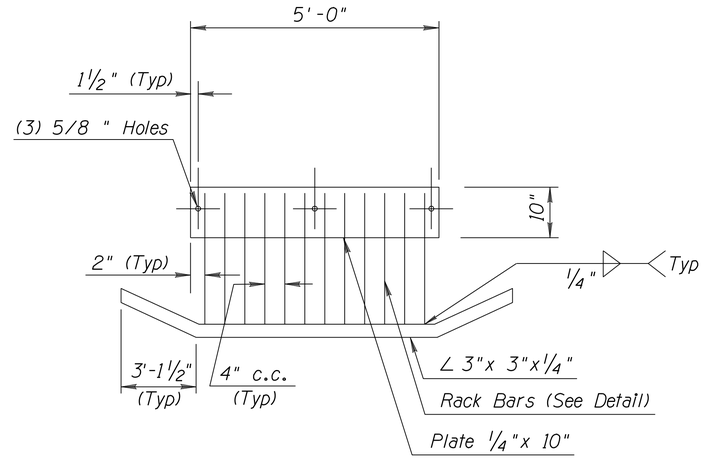

ELEVATION

NTS

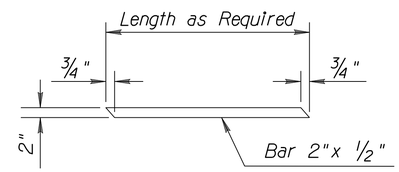

RACK BARS

NTS

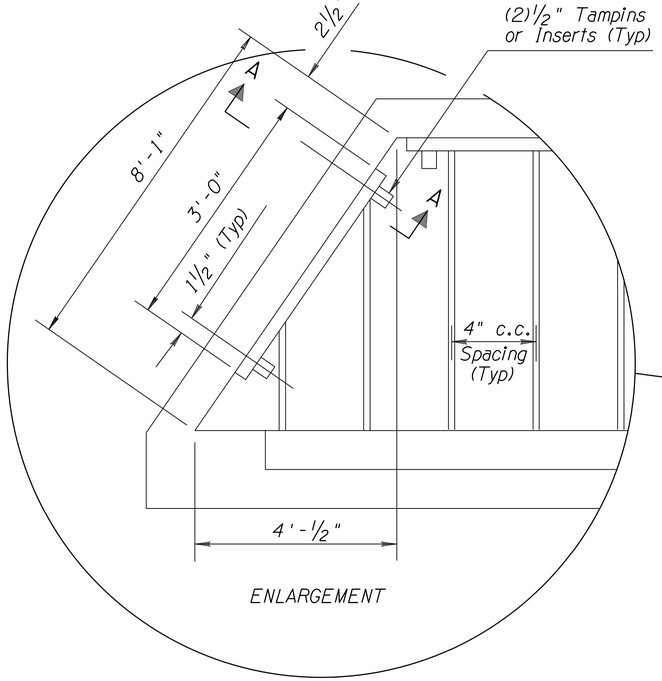

ENLARGEMENT

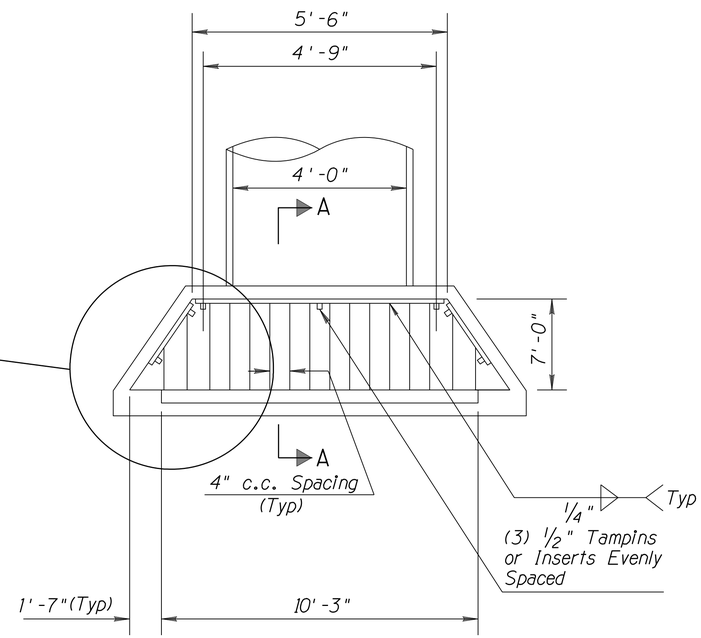

PLAN

NTS

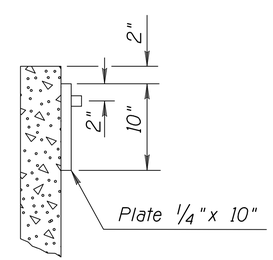

SECTION A-A

NTS

DETAIL D7

MODIFIED MAG 501-5 HEADWALL DROP INLET W/ TRASH RACK

Contact Arizona 811 Two Working Days Before You Dig
Call 811 or Click Arizona811.com

NO.	REVISION	BY	DATE
3			
2			
1			

MARICOPA COUNTY

NORTHERN PARKWAY
103RD AVENUE TO 91ST AVENUE - PHASE 1
PROJECT NO. TT0372

	BY	DATE
DESIGNED	BF	5/6/2026
DRAWN	BF, JW, MM, AB, GT	5/6/2026
CHECKED	JH	5/6/2026

Registered Professional Engineer (Civil) CERTIFICATE NO. 62327 WILLIAM FOGELL Date Signed 5/6/2026 ARIZONA U.S.A.

J2 Design

DRAINAGE DETAIL
HEADWALL DROP INLET W/ TRASH RACK

SHEET DT06

TRACS NO.

c:\bmstyli-pw\jwotring__j2design\d0573068\TT0372_SC_Drainage_Detail_06.dgn
OpenRoads_Imperial 10:42:34 PM 5/7/2026 MCDOT_TYLIN_PRINT.tbl TYLI_GN_bwpdf.pltcfg

F.H.W.A. REGION	STATE	PROJECT NO.	SHEET NO.	TOTAL SHEETS	RECORD DRAWING
9	AZ	TT0372	66	224	

GENERAL NOTES FOR CONSTRUCTION

1 Contractor shall obtain all necessary permits prior to construction.

2 All construction shall conform to the City of Peoria or Glendale's standard details, and current Maricopa Association of Governments (MAG) uniform standard specifications and details for public works construction.

3 This set of plans has been reviewed for compliance with the City of Peoria or Glendale's requirements prior to issuance of construction permits. However, such review shall not prevent the city of Peoria or Glendale from requiring correction of errors in plans found to be in violation of any law or ordinance.

4 The City of Peoria or Glendale does not warrant any quantities shown on these plans.

5 The City approval is for general layout in the right-of-way only. This approval is valid for a period of one year. Construction permits shall be obtained during this period or the plans shall be resubmitted for review and approval.

6 An approved set of plans shall be available on the job site at all times.

7 The City of Peoria or Glendale's construction inspector shall be notified 48 hours prior to any construction work and inspections. Construction work concealed without inspection by the city construction inspector shall be subject to exposure at the Contractor's expense.

8 Any work performed without the approval of the City of Peoria or Glendale engineer, or designee, and any work/material not in conformance with city engineering standards is subject to removal and replacement at the contractor's expense.

9 Right-of-way improvements shall not be accepted until “as-built”plans have been submitted and approved by the City of Peoria or Glendale.

10 The Contractor is responsible for the removal or relocation of all obstructions within the right-of-way prior to starting new construction.

11 The Contractor is responsible for arranging the relocation and associated costs of all utilities. A utility relocation schedule shall be submitted prior to the issuance of permits.

12 The Contractor is responsible for obtaining or dedicating all required rights-of-way and easements to the city prior to issuance of permits.

13 The Contractor shall contact Arizona811 (811 or 1-800-stake-it) at least 48 hours prior to construction. The Contractor shall locate all conflicts prior to construction.

14 The Contractor shall barricade construction sites at all times per the City of of Peoria or Glendale traffic barricade manual. A traffic control plan shall be submitted to the City of Peoria or Glendale for approval in advance of construction.

15 Potable water is not available for construction use other than the filling and testing of new lines. The unlawful removal of water from a fire hydrant or any other source is a violation of the municipal code, punishable by fine and/or imprisonment.

16 Prior to moving or destroying protected native plant species, the Contractor shall file a formal Notice of Intent (NOI) with the Arizona Department of Agriculture (602-542-6408).

17 The Contractor shall comply with the Environmental Protection Agency National Pollutant Discharge Elimination System (NPDESs) storm water requirements established for construction sites, Arizona Department of Environmental Quality (ADEQ) general permit for discharge from construction activities, and the City of Peoria or Glendale storm water management plans.

18 No person shall use any mechanical equipment for land leveling or clearing, road construction, trenching, excavating, demolition, nor engage in any earthmoving activity without first obtaining a permit from the Maricopa County Air Quality Department (MCAQD) (602-506- 6010), 301 W. Jefferson Street, Suite 410, Phoenix, AZ 85003. (this notice is issued pursuant to Arizona Revised Statues (ARS) 36-779.07, notice of building agencies.)

19 These plans reflect conditions as they exist at the time of design. If existing conditions have changed by the time of construction the contractor shall notify the City of Peoria or Glendale and these plans may have to be amended prior to proceeding with construction activities.

20 All improvements damaged or replaced during construction shall be replaced with improvements that meet the current City of Peoria or Glendale's standards.

21 All construction shall conform to the latest edition(s) of the Maricopa Association of Governments (MAG) uniform standard specifications and details for public works construction and the latest edition of the city/local agency engineering design and construction standards.

GENERAL NOTES FOR WATER MAIN CONSTRUCTION

1 All general construction notes shall apply.

2 All construction shall conform to the City of Peoria or Glendale's standard details, and current MAG uniform standard specifications and details for public works construction.

3 City of Peoria or Glendale inspectors shall be notified 48-hours prior to starting each phase of construction, and each inspection requested.

4 The Contractor shall be responsible for verifying the location and elevation of any utility lines before starting construction. If the existing line is found to be in a substantially different location, or will adversely affect the operation of the utility, the Contractor shall notify the City of Peoria or Glendale prior to making the connections. Amendments to the plans may be required prior to proceeding with construction activities.

5 The City of Peoria or Glendale are not liable for delays or damages to utilities related to this construction.

6 As-built drawings (one set of prints for each review and a final set of mylars), certified by the project engineer, shall be submitted to and accepted by the City of Peoria or Glendale before final acceptance of the work.

7 Backfilling shall not be done until lines are inspected and approved by the City of Peoria or Glendale construction inspector.

8 Materials shall be furnished and installed by the contractor according to the City of Peoria or Glendale's approved materials list. MAG uniform standard specifications and details for public works construction.

9 All service lines shall be type k copper pipe or tubing. Per the MAG standards the minimum size service shall be one-inch. Service lines shall be continuous under pavement without a connection or extension.

10 All taps shall use all bronze double strap service saddles.

11 Pavement replacements shall be made per MAG uniform standard specifications and details for public works construction.

12 All water lines 12 inches and larger and reclaimed water lines shall be marked with locating tape one foot above the main.

13 All changes in direction of water lines 6 inches and larger shall be marked with an electronic marker. Electronic marker shall be a self-leveling type and operate on a frequency of 145.7 khz up to a depth of 4 feet.

14 All ductile iron water lines larger than 12 inches in diameter shall be encased in polyethylene wrap per MAG standard (610.1 and 610.2) and manufacturer specifications. All new waterline joints to be double wrapped in polyethylene wrap.

15 The Contractor must request a meter for filling and testing of new water lines from their assigned City of Peoria or Glendale construction inspector. This meter should be ordered two working days prior to the start of construction.

16 Size on size tapping sleeves not permitted per MAG standards.

17 Existing waterlines to be abandoned in place. Cut, drain, cap and grout per MAG 350.2.1.

GENERAL NOTES FOR ADEQ

1 All pipe, fittings, valves, and other appurtenances shall conform to AWWA and ANSI/NSF 60/61 Standards.

2 All waterlines must be disinfected prior to service. Disinfection shall be performed in accordance with Engineering Bulletin 10, Chapter 7, Section L.3.

3 Hydrostatic pressure testing is required for all waterlines upon completion of construction. Testing procedures and specifications shall comply with Engineering Bulletin 10, Chapter 7, Section 2, and MAG 611.1.1.

4 Minimum horizontal and vertical separation between sewer and water mains shall be maintained as specified in Engineering Bulletin 10, Chapter 7, Section F.

5 All pipe shall have minimum of 3 feet of cover. Refer to MAG 610.4 for specific requirements.

GENERAL NOTES FOR GEOTECHNICAL

1 **Site preparation & grading.** Native soils to be scarified to a depth of eight (8) inches, two (2) percent optimum moisture content and compacted in place to a minimum of ninety-five (95) percent (%) of dry density.

2 **Pavement areas.** On-site soils should be suited as pavement subgrade soils. Flexible pavement sections should be central plant mix asphaltic concrete pavement (AC) on compacted aggregate base course (ABC) and should consist of 3"for asphalt thickness, 6"aggregate base course with a corresponding structural number of 1.92.

3 **Aggregate base course (ABC).** Conform to MAG section 702. Plasticity Index (PI) through #40 sieve not to exceed five (5) percent per ASTM d 4318 and a abrasion test (ASTM test method c131) of no greater than 40. All aggregate base material should conform to MAG specifications, be placed in 8"lifts, compacted to a minimum of 95% with an optimum moisture content of 2%.

4 **Engineered fill.** Native soils can be used for fill material for general site grading, trench backfill and pavement areas. For all imported soils and soil gradation requirements, follow recommendations as shown in MAG specifications.

5 **Excavation.** Shallow excavations (less than 6 feet) can be performed using conventional earth moving equipment. Trench backfill and compaction should be accomplished per MAG 601 and City of Peoria or Glendale design standards and policy requisites. Use aggregate conforming to MAG 702 for material to be used as bedding and cover for the new water line. For temporary excavations, slopes and construction considerations, follow recommendations presented inMAG specifications. Follow all OSHA health and safety standards for excavations, 29 CFR part 1926 (or successor regulations).

6 **Corrosion potential.** Proposed ductile-iron pipe and related joints should be wrapped with polyethylene protection for protection against corrosion.

BASIS OF SURVEY

1 The following parameters were set for the basis of this survey:

System: United States State Plane NAD83
Zone: Arizona Central
Datum: North American 1983

Units = international feet (1 foot =0.3048 meters exactly)

2 Trimble R8/R10 GPS equipment and Trimble S6/S7 robotics were used for all field measurements.

3 Direct Satellite measurements were made on each point on the North American Datum of 1983 with automatic translation made to the State Plane grid system.

4 GPS calibration and translation to the surface was performed by land survey software. A grid adjustment factor of 1.0001 and scale origin values of N=0.00, E=0.00

5 All bearings are ground/grid bearings
All distances are ground distances (international feet)
All coordinates are ground values (international feet)

6 Basis of bearing for this project is N01°14'06"E for the East line of the Northeast quarter of section Section 10, Township 1 South, Range 2 West of the Gila & Salt River Base & Meridian as derived from static and RTK GPS measurements.

Contact Arizona 811 Two Working Days Before You Dig
Call 811 or Click Arizona811.com

NO.	REVISION	BY	DATE
3			
2			
1			

MARICOPA COUNTY

NORTHERN PARKWAY
103RD AVENUE TO 91ST AVENUE - PHASE 1
PROJECT NO. TT0372

	BY	DATE
DESIGNED	C. CLEMENT	05/2026
DRAWN	C. CLEMENT	05/2026
CHECKED	R. CIRCELLO	05/2026

Registered Professional Engineer (Civil) CERTIFICATE NO. 58569 RYAN J. CIRCELLO Date Signed 04/21/26 ARIZONA U.S.A.
EXPIRES: 9/30/2026

BURGESS & NIPLE
1230 W. WASHINGTON ST. SUITE 511
TEMPE, AZ 85288

UTILITY GENERAL NOTES

SHEET U00

TRACS NO.

pw://tyli-pw.bentley.com:tyli-pw-01/Documents/Projects/221991.00_TT0372/600_CADD/05_Official/Dgn_PHASE 1/Sheets/B&N/TT0372_UT_Utility_Notes_01.dgn 2:58:50 PM 4/21/2026

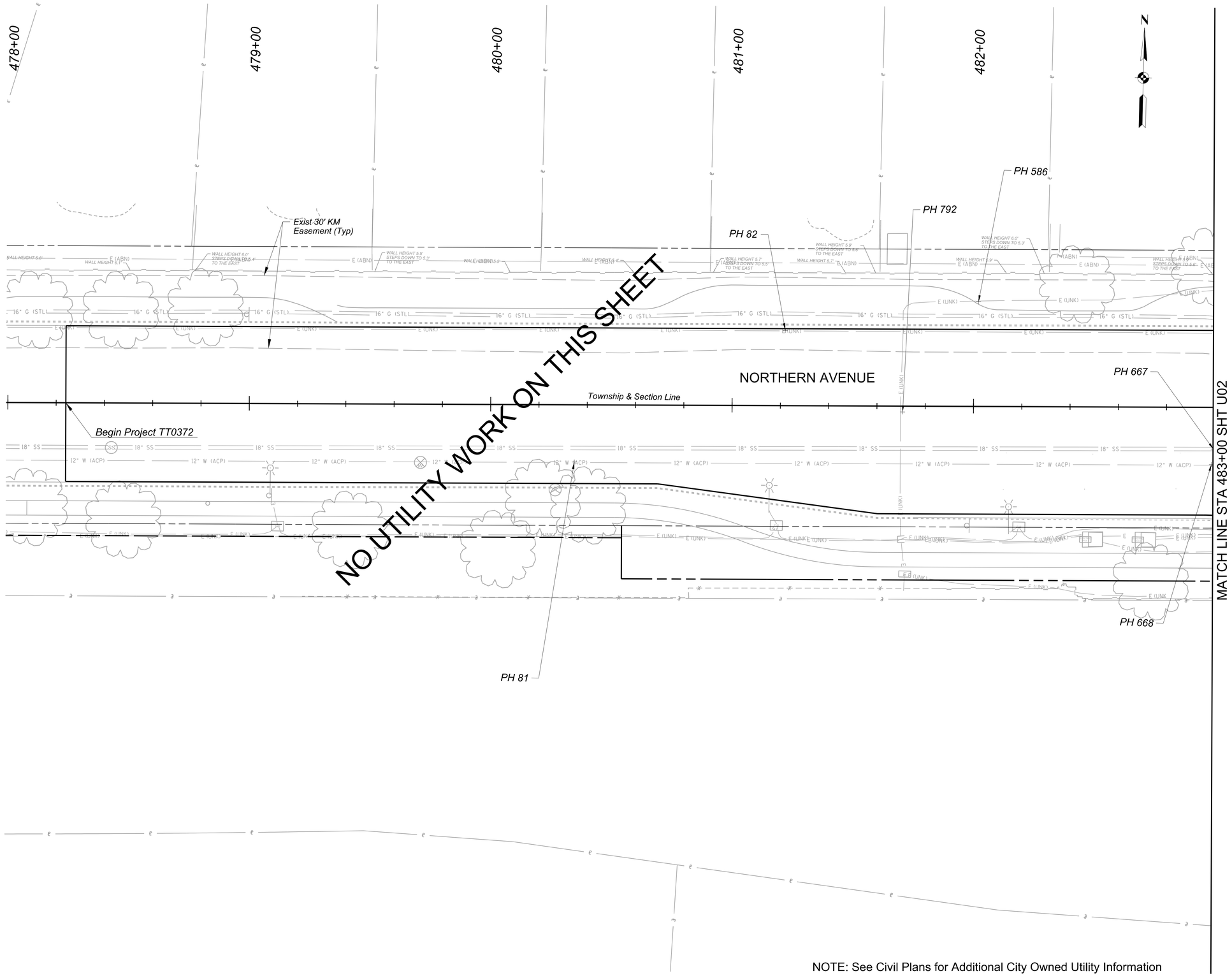

NOTE: See Civil Plans for Additional City Owned Utility Information

F.H.W.A. REGION	STATE	PROJECT NO.	SHEET NO.	TOTAL SHEETS	RECORD DRAWING
9	AZ	TT0372	67	224	

☐ REMOVAL / RELOCATE (BY OTHERS) ☐

◯ CONSTRUCTION ◯

SCALE: Hor: 1"=20'
Vert: NA

20 0 20 40
SCALE IN FEET

Contact Arizona 811 Two Working Days Before You Dig
ARIZONA811 BLUE STAKE, INC.
Call 811 or Click Arizona811.com

NO.	REVISION	BY	DATE
3			
2			
1			

MARICOPA COUNTY

NORTHERN PARKWAY
103RD AVENUE TO 91ST AVENUE - PHASE 1
PROJECT NO. TT0372

	BY	DATE
DESIGNED	B. POE	05/2026
DRAWN	C. BURDETT	05/2026
CHECKED	J. BARR	05/2026

BRENAN POE
Date Signed 05/26/2026
ARIZONA, U.S.A.

TYLin

NORTHERN AVENUE - UTILITY PLAN
STA 478+00 TO STA 483+00

SHEET U01

TRACS NO.

$PLTDRVS$ $PENTBLS$ 10:33:53 AM 5/7/2026

pw://tyli-pw.bentley.com:tyli-pw-01/Documents/Projects/221991.00_TT0372/600_CADD/05_Official/Dgn_PHASE 1/Sheets/TT0372_SU_Northern_U01_PLAN_00A.dgn$USER$

F.H.W.A. REGION	STATE	PROJECT NO.	SHEET NO.	TOTAL SHEETS	RECORD DRAWING
9	AZ	TT0372	68	224	

☐ REMOVAL / RELOCATE (BY OTHERS) ☐

◯ CONSTRUCTION ◯

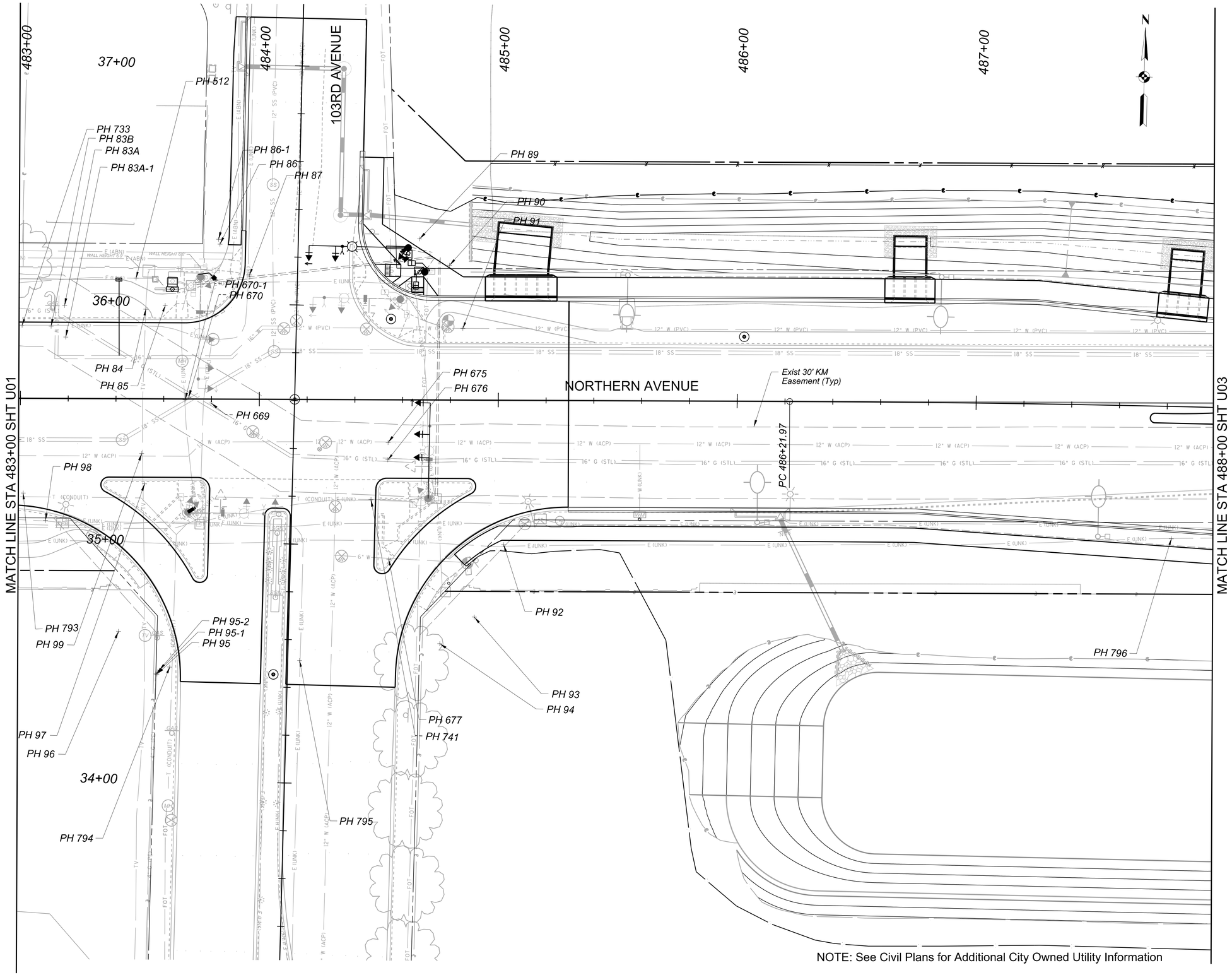

NOTE: See Civil Plans for Additional City Owned Utility Information

SCALE: Hor: 1"=20'
Vert: NA

20 0 20 40
SCALE IN FEET

Contact Arizona 811 Two Working Days Before You Dig
Call 811 or Click Arizona811.com

NO.	REVISION	BY	DATE
3			
2			
1			

MARICOPA COUNTY

NORTHERN PARKWAY
103RD AVENUE TO 91ST AVENUE - PHASE 1
PROJECT NO. TT0372

	BY	DATE
DESIGNED	B. POE	05/2026
DRAWN	C. BURDETT	05/2026
CHECKED	J. BARR	05/2026

BRENAN POE
ARIZONA, U.S.A.

TYLin

NORTHERN AVENUE - UTILITY PLAN
STA 483+00 TO STA 488+00

SHEET U02

TRACS NO.

$PLTDRVS$ $PENTBLS$ 10:34:24 AM 5/7/2026

pw://tyli-pw.bentley.com:tyli-pw-01/Documents/Projects/221991.00_TT0372/600_CADD/05_Official/Dgn_PHASE 1/Sheets/TT0372_SU_Northern_U02_PLAN_00B.dgn$USER$

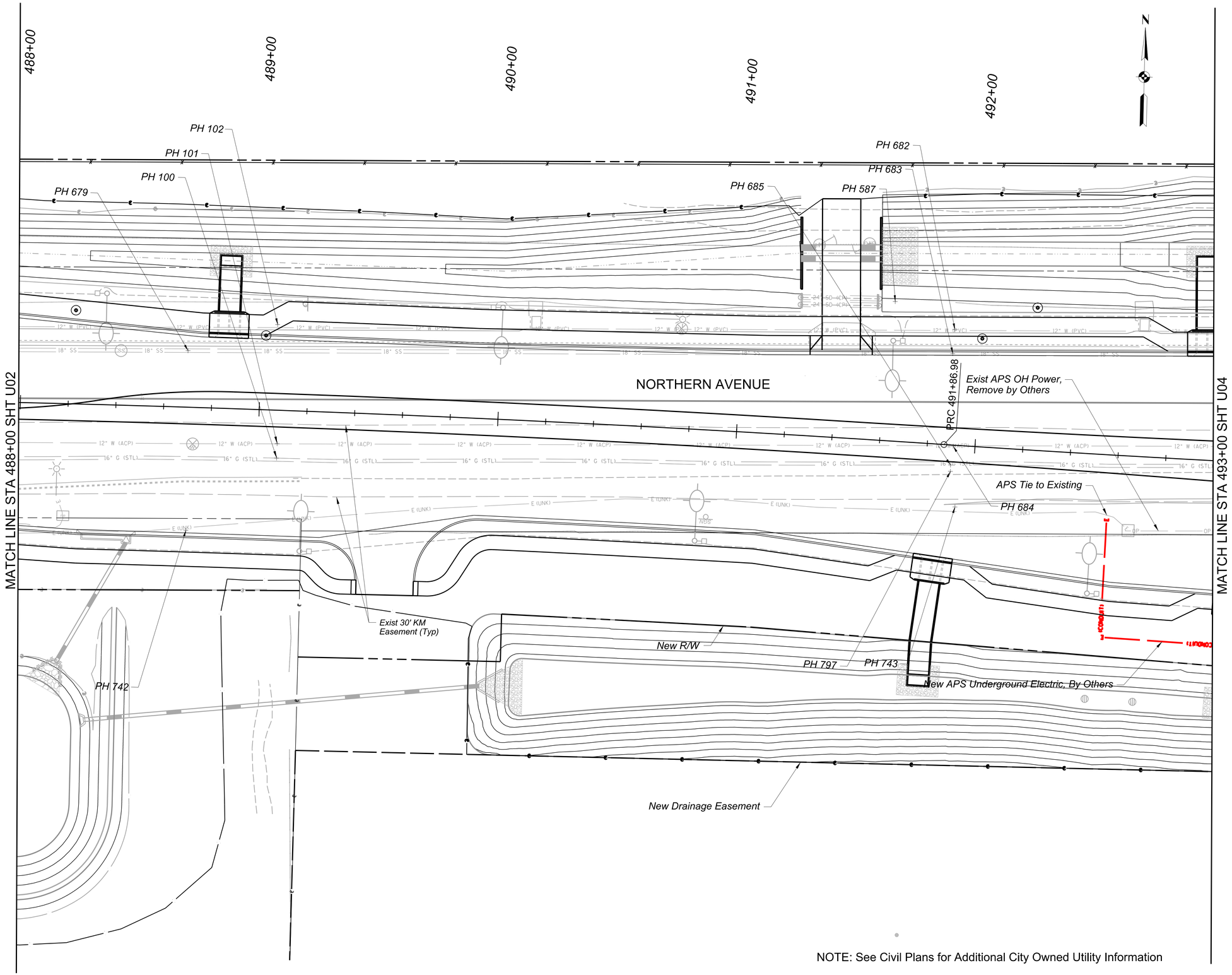

NOTE: See Civil Plans for Additional City Owned Utility Information

F.H.W.A. REGION	STATE	PROJECT NO.	SHEET NO.	TOTAL SHEETS	RECORD DRAWING
9	AZ	TT0372	69	224	

☐ REMOVAL / RELOCATE (BY OTHERS) ☐

◯ CONSTRUCTION ◯

SCALE: Hor: 1"=20'
Vert: NA

20 0 20 40
SCALE IN FEET

Contact Arizona 811 Two Working Days Before You Dig
ARIZONA811 BLUE STAKE, INC.
Call 811 or Click Arizona811.com

NO.	REVISION	BY	DATE
3			
2			
1			

MARICOPA COUNTY

NORTHERN PARKWAY
103RD AVENUE TO 91ST AVENUE - PHASE 1
PROJECT NO. TT0372

	BY	DATE
DESIGNED	B. POE	05/2026
DRAWN	C. BURDETT	05/2026
CHECKED	J. BARR	05/2026

BRENAN POE
Registered Professional Engineer (Civil)
ARIZONA, U.S.A.

TYLin

NORTHERN AVENUE - UTILITY PLAN
STA 488+00 TO STA 493+00

SHEET U03

TRACS NO.

$PLTDRVS$
$PENTBLS$
10:34:54 AM 5/7/2026
pw://tyli-pw.bentley.com:tyli-pw-01/Documents/Projects/221991.00_TT0372/600_CADD/05_Official/Dgn_PHASE 1/Sheets/TT0372_SU_Northern_U03_00C.dgn$USERS$

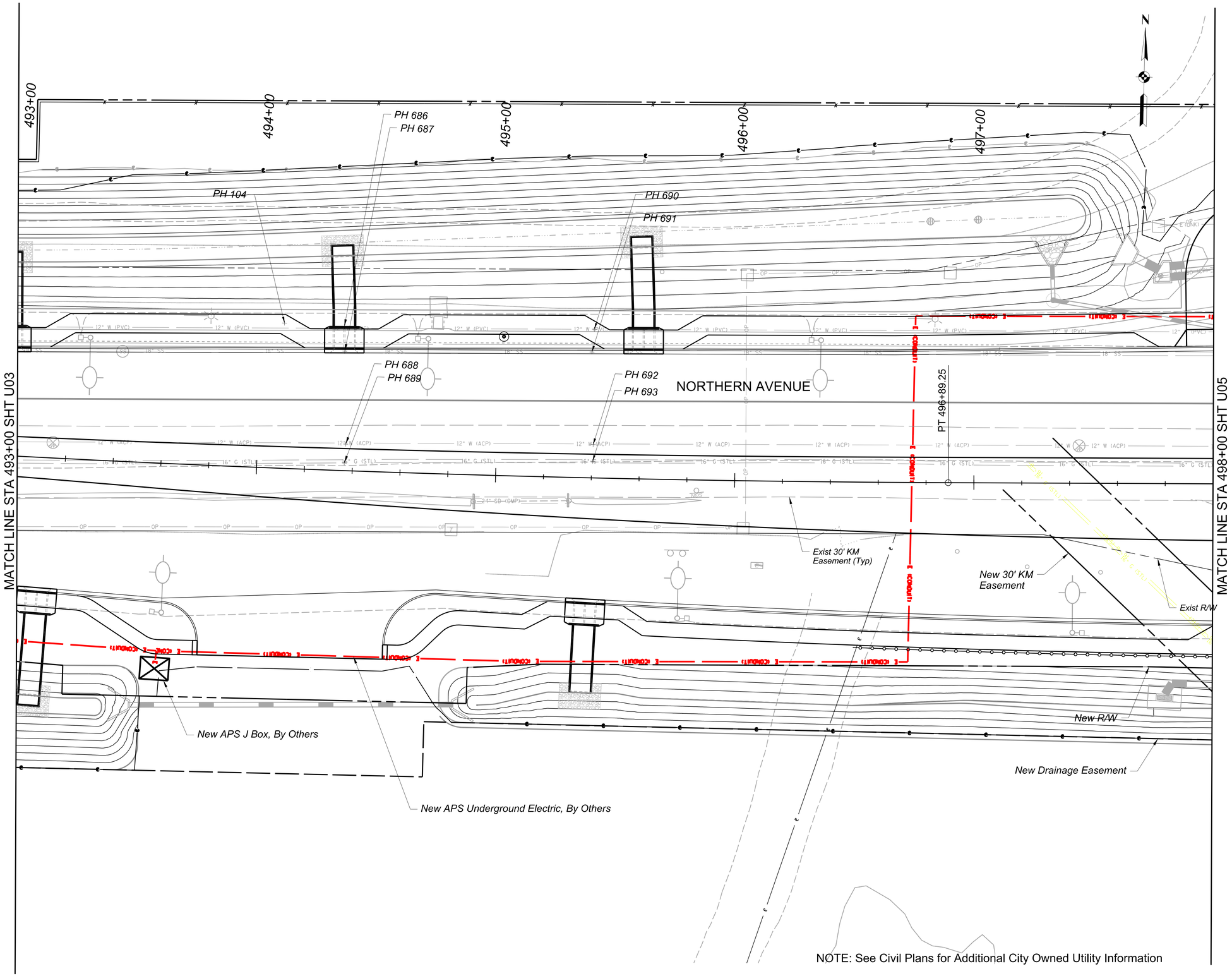

NOTE: See Civil Plans for Additional City Owned Utility Information

F.H.W.A. REGION	STATE	PROJECT NO.	SHEET NO.	TOTAL SHEETS	RECORD DRAWING
9	AZ	TT0372	70	224	

☐ *REMOVAL / RELOCATE (BY OTHERS)* ☐

○ *CONSTRUCTION* ○

SCALE: Hor: 1"=20'
Vert: NA

20 0 20 40
SCALE IN FEET

Contact Arizona 811 Two Working Days Before You Dig
Call 811 or Click Arizona811.com

NO.	REVISION	BY	DATE
3			
2			
1			

MARICOPA COUNTY

NORTHERN PARKWAY
103RD AVENUE TO 91ST AVENUE - PHASE 1
PROJECT NO. TT0372

	BY	DATE
DESIGNED	B. POE	05/2026
DRAWN	C. BURDETT	05/2026
CHECKED	J. BARR	05/2026

BRENAN POE
REGISTERED PROFESSIONAL ENGINEER
ARIZONA, U.S.A.

TYLin

NORTHERN AVENUE - UTILITY PLAN
STA 493+00 TO STA 498+00

SHEET U04

TRACS NO.

pw://tyli-pw.bentley.com:tyli-pw-01/Documents/Projects/221991.00_TT0372/600_CADD/05_Official/Dgn_PHASE 1/Sheets/TT0372_SU_Northern_U04.dgn USER$ 10:35:40 AM 5/7/2026 $PENTBL$$ $PLTDRV$$

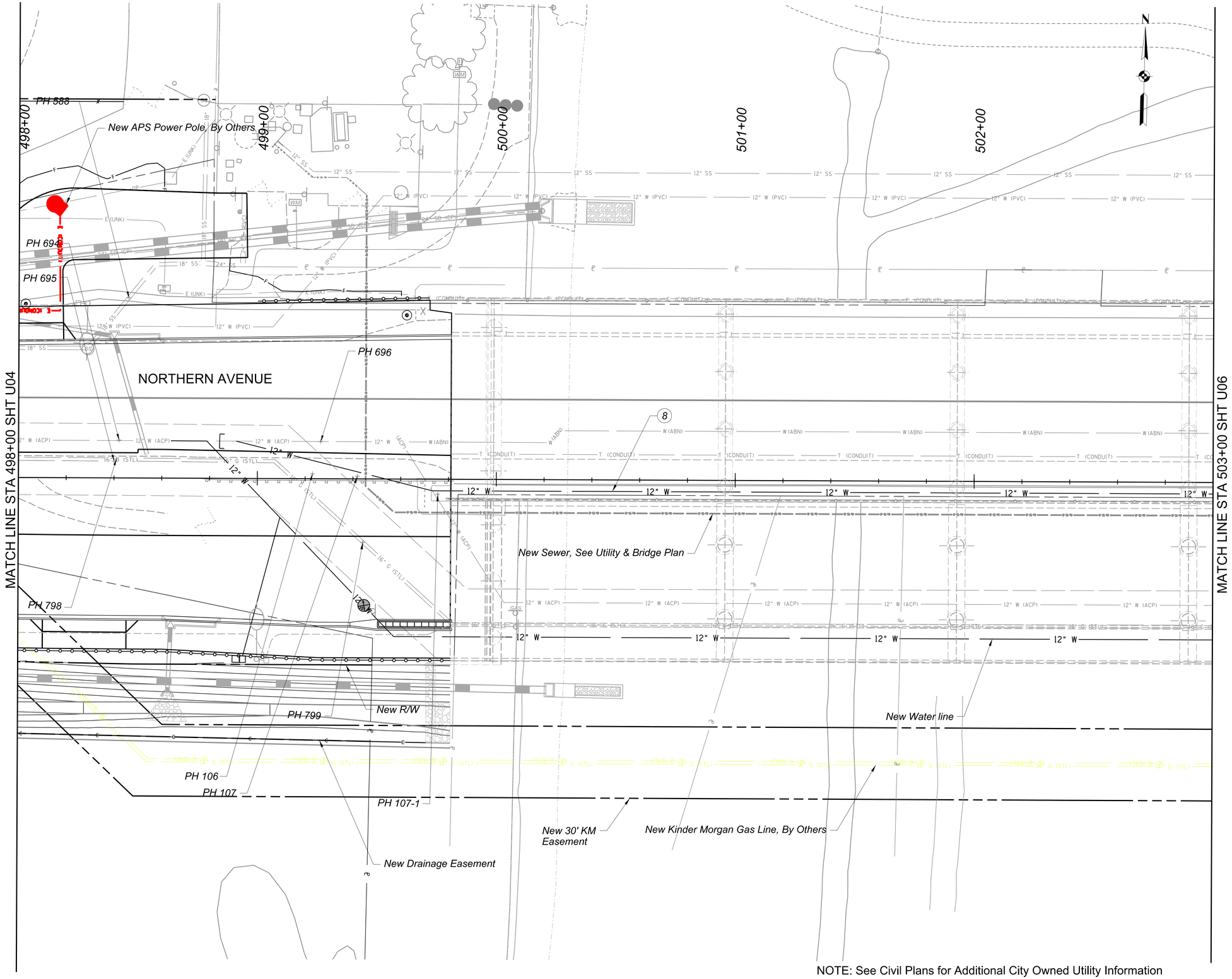

NOTE: See Civil Plans for Additional City Owned Utility Information

F.H.W.A. REGION	STATE	PROJECT NO.	SHEET NO.	TOTAL SHEETS	RECORD DRAWING
9	AZ	TT0372	71	224	

☐ *REMOVAL / RELOCATE (BY OTHERS)* ☐

○ *CONSTRUCTION* ○

(8) *Install Temporary Shoo-Fly 12" HDPE WL* 412 LF

SCALE: Hor: 1"=20'
Vert: NA

20 0 20 40
SCALE IN FEET

Contact Arizona 811 Two Working Days Before You Dig
Call 811 or Click Arizona811.com

NO.	REVISION	BY	DATE
3			
2			
1			

MARICOPA COUNTY

NORTHERN PARKWAY
103RD AVENUE TO 91ST AVENUE - PHASE 1
PROJECT NO. TT0372

	BY	DATE
DESIGNED	B. POE	05/2026
DRAWN	C. BURDETT	05/2026
CHECKED	J. BARR	05/2026

BRENAN POE
ARIZONA, U.S.A.

TYLin

NORTHERN AVENUE - UTILITY PLAN
STA 498+00 TO STA 503+00

SHEET U05

TRACS NO.

GN_bwpdf.pltcfg
MCDOT_TYLIN_PRINT.tbl
5/7/2026 4:42:42 PM
Courtney Burdett OpenRoads_Imperial
c:\bmstylin_ameri\0573032\TT0372_SU_Northern_Utility_Plan_00E.dgn

F.H.W.A. REGION	STATE	PROJECT NO.	SHEET NO.	TOTAL SHEETS	RECORD DRAWING
9	AZ	TT0372	72	224	

☐ REMOVAL / RELOCATE (BY OTHERS) ☐

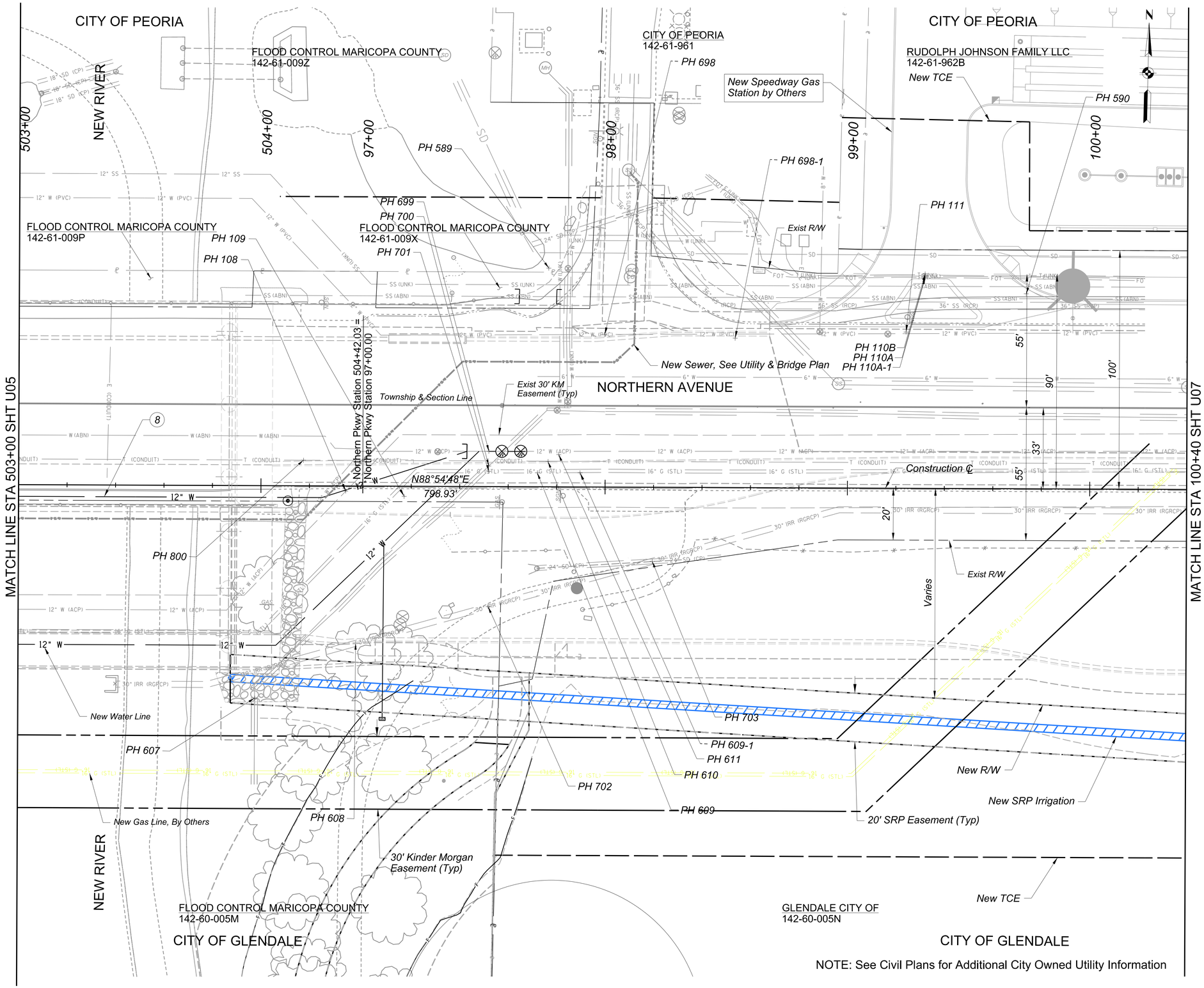

NOTE: See Civil Plans for Additional City Owned Utility Information

☐ CONSTRUCTION ☐

(8) Install Temporary Shoo-Fly 12" HDPE WL 188 LF

SCALE: Hor: 1"=20'
Vert: NA

20 0 20 40
SCALE IN FEET

Contact Arizona 811 Two Working Days Before You Dig
Call 811 or Click Arizona811.com

NO.	REVISION	BY	DATE
3			
2			
1			

MARICOPA COUNTY

NORTHERN PARKWAY
103RD AVENUE TO 91ST AVENUE - PHASE 1
PROJECT NO. TT0372

	BY	DATE
DESIGNED	B. POE	05/2026
DRAWN	C. BURDETT	05/2026
CHECKED	J. BARR	05/2026

BRENAN POE
Registered Professional Engineer
ARIZONA, U.S.A.

TYLin

NORTHERN AVENUE - UTILITY PLAN
STA 503+00 TO 100+40

SHEET U06

TRACS NO.

c:\bmstylin_ameri\0573032\TT0372_SU_Northern_Utility_Plan_01.dgn
Courtney Burdett OpenRoads_Imperial 4:34:03 PM 5/7/2026 MCDOT_TYLIN_PRINT.tbl GN_bwpdf.pltcfg

F.H.W.A. REGION	STATE	PROJECT NO.	SHEET NO.	TOTAL SHEETS	RECORD DRAWING
9	AZ	TT0372	73	224	

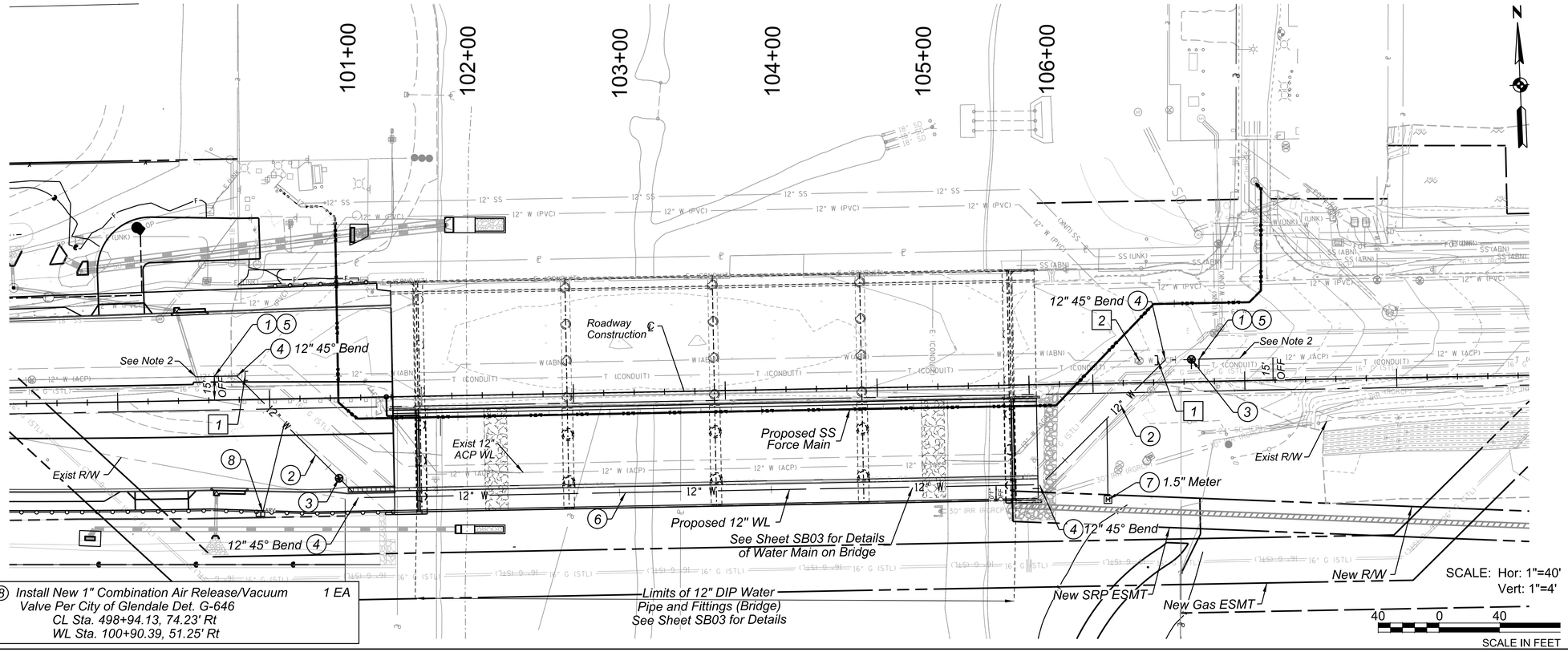

⑧ Install New 1" Combination Air Release/Vacuum Valve Per City of Glendale Det. G-646 — 1 EA
CL Sta. 498+94.13, 74.23' Rt
WL Sta. 100+90.39, 51.25' Rt

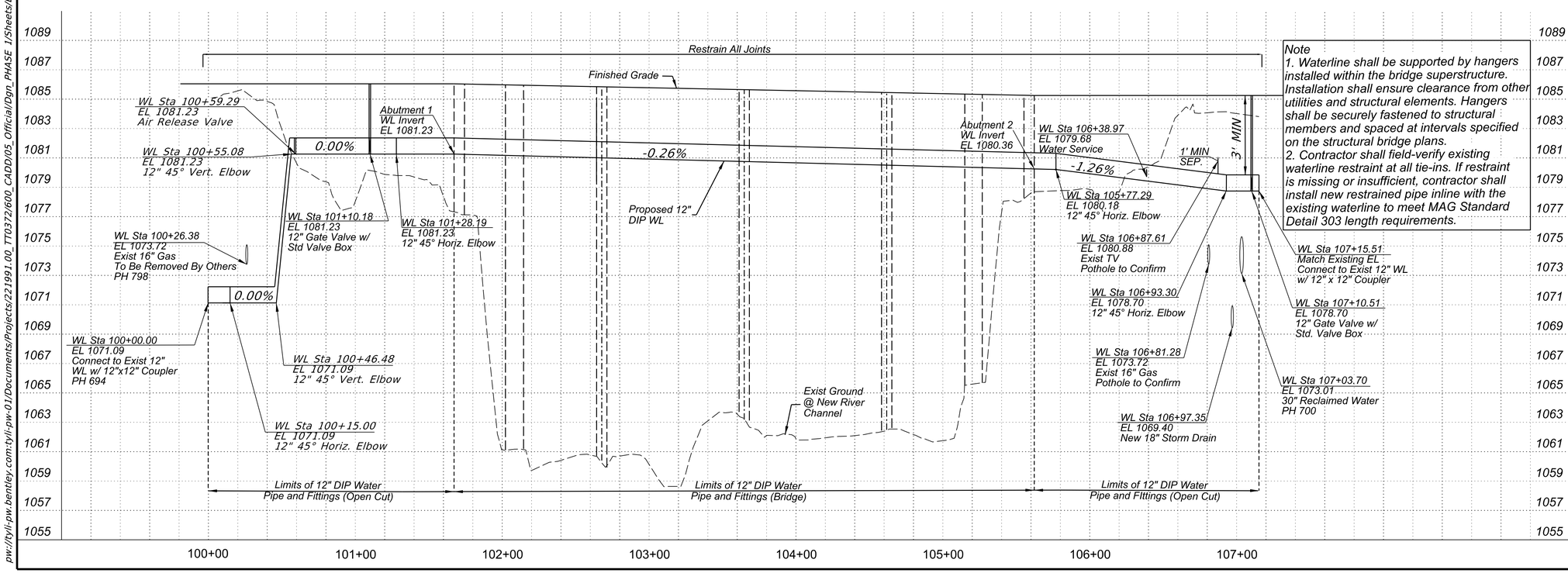

Note
1. Waterline shall be supported by hangers installed within the bridge superstructure. Installation shall ensure clearance from other utilities and structural elements. Hangers shall be securely fastened to structural members and spaced at intervals specified on the structural bridge plans.
2. Contractor shall field-verify existing waterline restraint at all tie-ins. If restraint is missing or insufficient, contractor shall install new restrained pipe inline with the existing waterline to meet MAG Standard Detail 303 length requirements.

REMOVAL / RELOCATE

1. Cut and Remove Exist ACP WL as Needed. Install Cap on Exist WL per MAG Section 350.2.1 — 2 EA
   CL Sta. 498+84.18, 15.62' Lt
   WL Sta. 100+18.76
   CL Sta. 97+42.92, 14.53' Lt
   WL Sta. 106+91.00, 3.92' Lt
2. Abandon Exist 12" Water Valve per MAG Det. 350 — 1 EA

CONSTRUCTION

1. Connect to Exist 12" ACP WL per MAG Section 610.11. Contractor to Confirm Proposed Connection Location and Furnish All Necessary Fittings. — 2 EA
   CL Sta. 498+63.76, 15.63' Lt
   WL Sta. 100+00.00
   CL Sta. 97+70.14, 14.62' Lt
   WL Sta. 107+15.51
2. Install New 12" DIP WL Per MAG Section 601 & 750 (Including City of Glendale Revisions). Restrain per MAG Det. 303-1 & 303-2. Pipe Shall be Polyethylene Wrapped per MAG Sec. 610 w/ Joints Double Wrapped. Bedding and Backfill per City of Glendale Det. G-690. — 338 LF
3. Install New 12" Gate Valve, Box, and Cover per MAG Section 630.3, MAG Det. 391-1, Type "A" and City of Glendale Det. G-601. — 2 EA
   CL Sta. 499+44.78, 52.94' Lt
   WL Sta. 101+10.18
   CL Sta. 97+65.13, 14.60' Lt
   WL Sta. 107+10.51
4. Install New DIP Fitting (Deflection Per Plan) w/ Thrust Block per MAG Det. 380. and Electronic Ball Marker per City of Glendale Std. Sec. 6.2.B.5. — 4 EA
   CL Sta. 498+78.75,15.62' Lt
   WL Sta. 100+15.00
   CL Sta. 499+57.27, 65.92' Rt
   WL Sta. 101+28.19
   CL Sta. 504+06.37 65.92' Rt
   WL Sta. 105+77.29
   CL Sta. 97+47.93, 14.53' Lt
   WL Sta. 106+93.30
5. Install New 12" ACP to DIP Coupling per City of Glendale Approved Products and Manufacturer Specifications. — 2 EA
   CL Sta. 498+63.76,15.63' Lt
   WL Sta. 100+00.00
   CL Sta. 97+70.14, 14.62' Lt
   WL Sta. 107+15.51
6. Install New 12" DIP WL per MAG Section 601 & 750 (Including City of Glendale Rev.). Restrain per MAG Det. 303-1 & 303-2. See Note 1 — 395 LF
7. Install New Meter and Meter Box per City of Glendale Det. G-643. Coordinate with City Forces for Installation of Meter (Size per Plan). Install Service Line to Main. Service Line Shall Not Have Any Splices per COG Det. G-642. — 1 EA
   CL Sta. 97+08.49, 76.69' Rt
   WL Sta. 106+01.63, 38.38' Rt

NO.	REVISION	BY	DATE
3			
2			
1			

MARICOPA COUNTY

NORTHERN PARKWAY
103RD AVENUE TO 91ST AVENUE - PHASE 1
PROJECT NO. TT0372

	BY	DATE
DESIGNED	C. GODFREY	05/2026
DRAWN	C. GODFREY	05/2026
CHECKED	R. CIRCELLO	05/2026

Registered Professional Engineer (Civil) CERTIFICATE NO. 58569 RYAN J. CIRCELLO Date Signed 05/08/26 ARIZONA U.S.A.
EXPIRES: 9/30/2026

BURGESS & NIPLE
1230 W. WASHINGTON ST. SUITE 511
TEMPE, AZ 85288

WATERLINE AT NEW RIVER BRIDGE
STA 100+00 TO 107+15

SHEET U 07

TRACS NO.

pw://tyli-pw.bentley.com:tyli-pw-01/Documents/Projects/221991.00_TT0372/600_CADD/05_Official/Dgn_PHASE 1/Sheets/B&N/TT0372_SC_Utility_Plan_01.dgn 10:26:41 AM5/8/2026

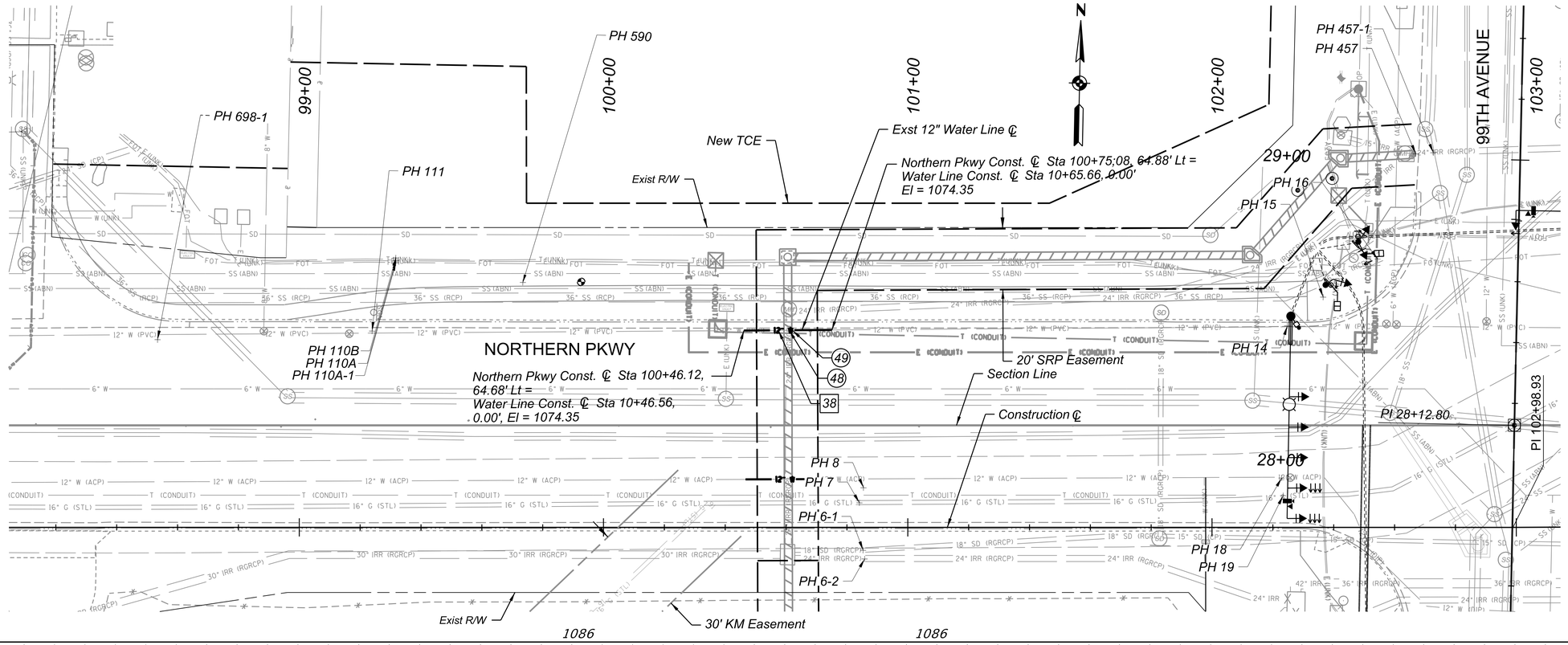

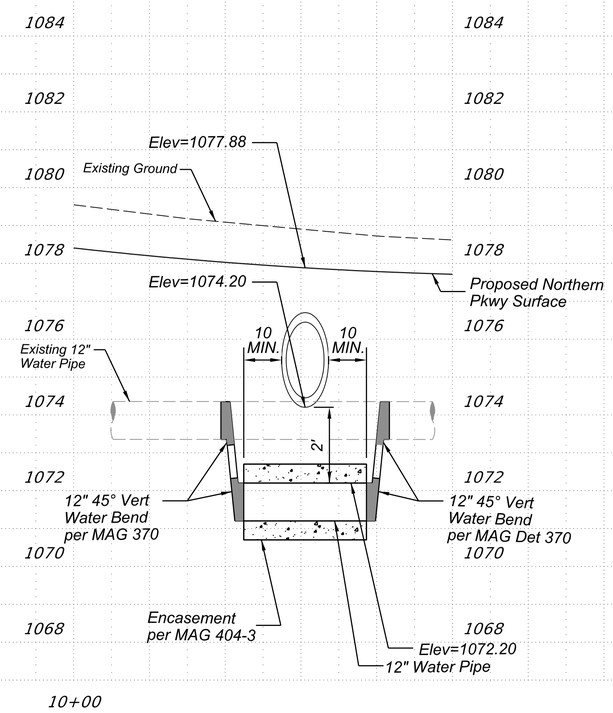

NOTE:

1. Construct thrust block per MAG Detail 380 & 381.
No additional measurement or payment will be made for thrust blocks.
2. Waterline shall be supported by hangers installed within the bridge superstructure. Installation shall ensure clearance from other utilities and structural elements. Hangers shall be securely fastened to structural members and spaced at intervals specified on the structural bridge plans.

F.H.W.A. REGION	STATE	PROJECT NO.	SHEET NO.	TOTAL SHEETS	RECORD DRAWING
9	AZ	TT0372	74	224	

☐ REMOVAL / RELOCATE ☐

38 Remove ACP Water Line — 29 LF

◯ CONSTRUCTION ◯

48 12" DIP Waterline with Fittings — 36 LF

49 Concrete Encasement with Reinforcement, 12 in Pipe, MAG Det 404 — 23 LF

SCALE: Hor: 1"=20'
Vert: 1"=2'

20 0 20 40
SCALE IN FEET

Contact Arizona 811 Two Working Days Before You Dig
ARIZONA811 BLUE STAKE, INC.
Call 811 or Click Arizona811.com

NO.	REVISION	BY	DATE
3			
2			
1			

MARICOPA COUNTY

NORTHERN PARKWAY
103RD AVENUE TO 91ST AVENUE - PHASE 1
PROJECT NO. TT0372

	BY	DATE
DESIGNED	B. POE	05/2026
DRAWN	C. BURDETT	05/2026
CHECKED	J. BARR	05/2026

BRENAN POE
ARIZONA, U.S.A.

TYLin

NORTHERN AVE - WATER LINE RELOCATION
STA 100+60

SHEET U08

TRACS NO.

GN_bwpdf.pltcfg
MCDOT_TYLIN_PRINT.tbl
5/7/2026 4:45:14 PM
Courtney Burdett OpenRoads_Imperial
c:\bmstylin_amer\d0573032\TT0372_SU_Northern_Water Line_Plan_01.dgn

GN_bwpdf.pltcfg
MCDOT_TYLIN_PRINT.tbl
5/7/2026
4:47:09 PM
Courtney Burdett OpenRoads_Imperial
c:\bmstylin_amer\d0573032\TT0372_SU_Northern_Water Line_Plan_02.dgn

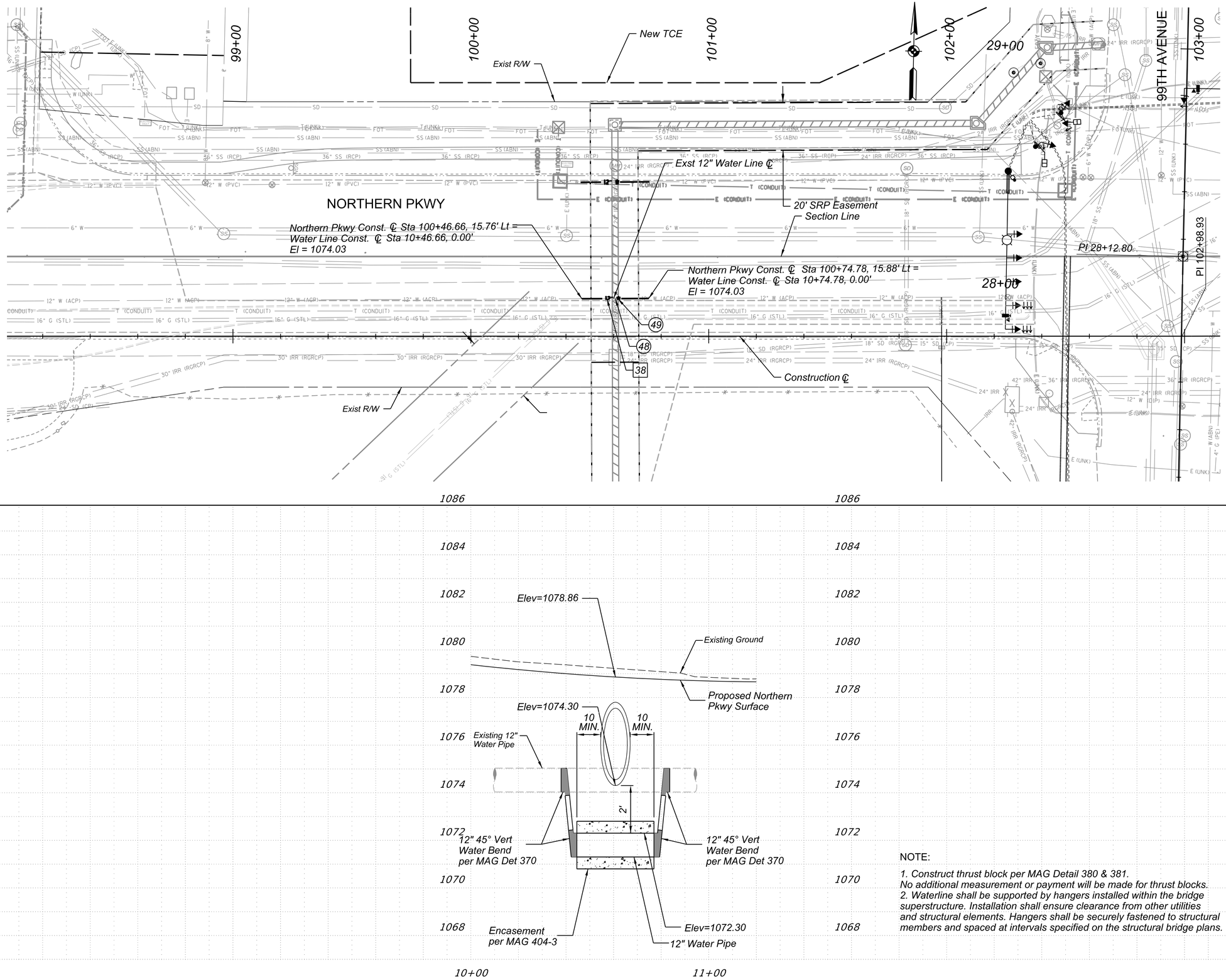

NOTE:

1. Construct thrust block per MAG Detail 380 & 381.
No additional measurement or payment will be made for thrust blocks.
2. Waterline shall be supported by hangers installed within the bridge superstructure. Installation shall ensure clearance from other utilities and structural elements. Hangers shall be securely fastened to structural members and spaced at intervals specified on the structural bridge plans.

F.H.W.A. REGION	STATE	PROJECT NO.	SHEET NO.	TOTAL SHEETS	RECORD DRAWING
9	AZ	TT0372	75	224	

☐ REMOVAL / RELOCATE ☐

38	Remove ACP Water Line	29 LF

◯ CONSTRUCTION ◯

48	12" DIP Waterline with Fittings	36 LF
49	Concrete Encasement with Reinforcement, 12 in Pipe, MAG Det 404	23 LF

SCALE: Hor: 1"=20'
Vert: 1"=2'

20 0 20 40
SCALE IN FEET

Contact Arizona 811 Two Working Days Before You Dig
ARIZONA811 BLUE STAKE, INC.
Call 811 or Click Arizona811.com

NO.	REVISION	BY	DATE
3			
2			
1			

MARICOPA COUNTY

NORTHERN PARKWAY
103RD AVENUE TO 91ST AVENUE - PHASE 1
PROJECT NO. TT0372

	BY	DATE
DESIGNED	B. POE	05/2026
DRAWN	C. BURDETT	05/2026
CHECKED	J. BARR	05/2026

BRENAN POE
ARIZONA, U.S.A.

TYLin

NORTHERN AVE - WATER LINE RELOCATION
STA 100+60

SHEET
U09

TRACS NO.

pw://tyli-pw.bentley.com:tyli-pw-01/Documents/Projects/221991.00_TT0372/600_CADD/05_Official/Dgn_PHASE 1/Sheets/TT0372_SU_Northern_Water_Plan_03.dgn 10:38:20 AM 5/7/2026 $PLTDRVS$ $PENTBL$$ $USERS$

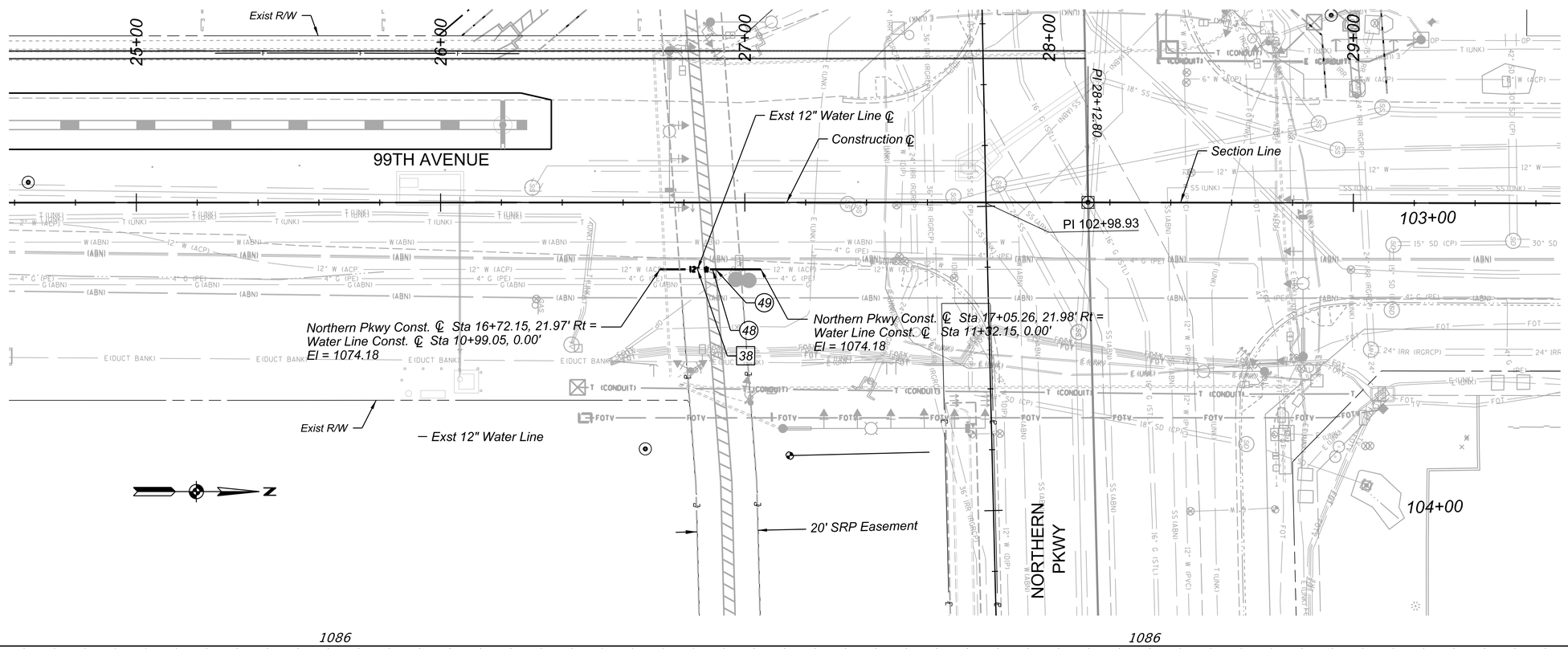

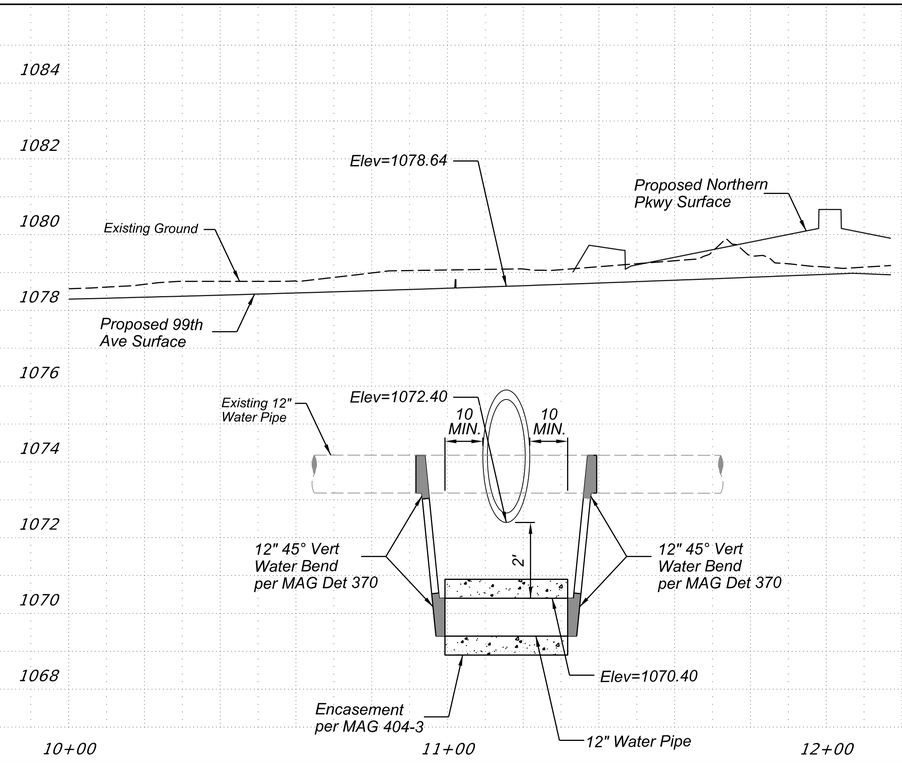

NOTE:

1. Construct thrust block per MAG Detail 380 & 381. No additional measurement or payment will be made for thrust blocks.
2. Waterline shall be supported by hangers installed within the bridge superstructure. Installation shall ensure clearance from other utilities and structural elements. Hangers shall be securely fastened to structural members and spaced at intervals specified on the structural bridge plans.

F.H.W.A. REGION	STATE	PROJECT NO.	SHEET NO.	TOTAL SHEETS	RECORD DRAWING
9	AZ	TT0372	76	224	

☐ REMOVAL / RELOCATE ☐

38 Remove ACP Water Line — 34 LF

◯ CONSTRUCTION ◯

48 12" DIP Waterline with Fittings — 36 LF

49 Concrete Encasement with Reinforcement, 12 in Pipe, MAG Det 404 — 23 LF

SCALE: Hor: 1"=20'
Vert: 1"=2'

20 0 20 40
SCALE IN FEET

Contact Arizona 811 Two Working Days Before You Dig
Call 811 or Click Arizona811.com

NO.	REVISION	BY	DATE
3			
2			
1			

MARICOPA COUNTY

NORTHERN PARKWAY
103RD AVENUE TO 91ST AVENUE - PHASE 1
PROJECT NO. TT0372

	BY	DATE
DESIGNED	B. POE	05/2026
DRAWN	C. BURDETT	05/2026
CHECKED	J. BARR	05/2026

BRENAN POE — Registered Professional Engineer (Civil) — Date Signed — Arizona, U.S.A.

TYLin

99TH AVE - WATER LINE RELOCATION
STA 26+50

SHEET U10

TRACS NO.

F.H.W.A. REGION	STATE	PROJECT NO.	SHEET NO.	TOTAL SHEETS	RECORD DRAWING
9	AZ	TT0372	77	224	

GENERAL NOTES

1. A City of Peoria Engineering Construction Permit is required for all wastewater line construction. Other permits, as required, shall be secured from the appropriate agency (i.e., County permits for County Right-of-Way).

2. Acceptable wastewater line materials are per City of Peora Engineering Standards. The Contractor shall not deviate from the materials specified by the Design Engineer on the contract documents without written approval from the Design Engineer and the Development & Engineering Department.

3. Wastewater line and grade stakes shall be set by a qualified Arizona Registered Land Surveyor and/or their representative prior to the construction of wastewater lines. The qualified Arizona Registered Land Surveyor and/or their representative shall verify that the grades conform to the approved construction plans and provide cut sheets to the Contractor and Engineering Inspector. Affer installation and prior to the Development & Engineering Department acceptance, the Engineer of Record shall certify that wastewater installation conforms to the approved construction plans.

4. The Contractor shall uncover all existing wastewater lines to be connected and verify invert elevations before any other construction.

5. All utility installations in conflict with these plans shall be removed or relocated at the Contractor/Developer's expense. Any utility removals or relocations must be approved by the governing municipality and utility purveyor.

6. Trench excavation, backfilling and compaction shall conform to MAG Standard Specification Section 601 except as modified herein.

7. Bedding and backfill for wastewater lines shall conform to the requirements of the MAG Standard Detalls 200-1, 200-2, 200-3, Trench Backfill and Surface Replacement.

8. Backfill shall be Type I as defined in Section 601 of the MAG Standard Specifications.

9. Service line connections to the wastewater main shall have a "Y" fitting. Saddles are not acceptable.

10. Wastewater service lines shall not be located under driveways, concrete aprons, scuppers, catch basins, or similar structures.

11. Wastewater Lines shall not be located within Retention/Detention basin areas.

12. All wastewater lines require the installation of metallic locating tape, which shall be installed in accordance with MAG Spec. 616.4 with the following exceptions: the tape shall be solid green in color, printed with the words "CAUTION SANITARY SEWER (and/or WASTEWATER) LINE BELOW", and installed directly above the ABC course, approximately 1-foot above the top of the pipe.

13. New wastewater taps shall be per MAG Standard Detail 440-1 and per the allowable materials stated in the City of Peoria Engineering Standards. Tap location shall be supplemented by a curb stamp per MAG Standard Detall 440-4 (stamped S on top of curb).

14. All wastewater manhole connections shall be insalled with a gasket, joint sealer, or water stop between the base and riser section

15. All manholes and components shall be constructed of Class A Concrete in conformance with MAG Standard Specification Section 725.

16. Workmanship on manhole bottoms will be closely inspected for uniformity and smoothness of channel. The preferred method for construction of manhole invert channels is to place pipe in manhole bottom and remove top of pipe after manhole is constructed. Failure to provide smooth, uniform channels shall be cause for rejection, removal and re-construction.

17. Manholes which: exceed 10-feet in depth, are 5-feet in diameter, are located in an arterial road, or as indicated per the plans shall have an approved manhole liner per City of Peoria Engineering Standards.

18. Manholes in paved and non-paved areas shall be adjusted to the finish grade upon the completion of pavement work.

19. All manholes located outside paved areas shall have a locking cover, a concrete collar, and Utility Marker per City of Peoria Engineering Standards.

20. Installation of manhole steps is not permitted.

21. Adjusting rings in manholes should be a minimum of 12-inches and a maximum of 24-inches per MAG Standard Detall 420-2.

22. The Contractor shall mandrel, air pressure test, and provide a closed-circuit television (CCTV) inspection in accordance with NASSCO Pipeline Assessment Certification Program. The CCTV inspection should be provided in digital (DVD) format utilizing a measuring device ahead of the camera to identify deflections in the line. The measuring device shall be able to measure water depth from 0- to 2-inches in 1/4-inch increments. The Contractor shall perform tests after Dry Utilities are installed and prior to any concrete work, street work, or final acceptance of the wastewater.

23. Wastewater lines shall remain "plugged" at the point(s) of connection to existing lines (outfalls) until all phases of the project have been accepted by the Development & Engineering Director.

24. No flow shall be released into the City wastewater system until after all tests have been passed and approved by the Engineering Inspector.

25. The following MAG Uniform Standard Details are specifically NOT allowed:
- No. 425 24-inch aluminum manhole frame and cover
- No. 428 Manhole steps - "Cast Iron"
- No. 440 Wastewater building connection - Type "B"
- No. 441 Wastewater clean out - wastewater tap with C.O.

26. All pavement replacement shall conform to MAG Standard Detail 200 with a "T-Top" - modified with a 1/2-sack Portland Cement ABC slurry, which conforms to MAG Standard Specification 728, (modified for 1/2-sack Portiand cement), for trench backfill from 1-foot above the fop of pipe to the existing pavement subgrade. Pavement replacement thickness shall be as specified by the Design Engineer on the contract documents, 4-inches, or the existing asphalt pavement thickness; whichever is greater.

27. The Contractor is responsible to notify the Engineer of Record before the wastewater line is backfilled so "as-built" measurements may be taken. Any changes to the approved plans must be authorized by the Engineer of Record and the Development & Engineering Director before the change is made in the field.

28. A Certificate of Approval of Construction (AOC) issued by the Maricopa County Environmental Services Department, is required prior to final project acceptance. A copy shall be provided to the City Engineering Inspector. NOTE: It should be noted that the Engineer of Record or designee shall be present during testing procedures so that the requirements of the AOC can be completed in full.

Contact Arizona 811 Two Working Days Before You Dig
ARIZONA811 BLUE STAKE, INC.
Call 811 or Click Arizona811.com

NO.	REVISION	BY	DATE
3			
2			
1			

MARICOPA COUNTY

NORTHERN PARKWAY
103RD AVENUE TO 91ST AVENUE - PHASE 1
PROJECT NO. TT0372

	BY	DATE
DESIGNED	H. OWENS	03/2026
DRAWN	S.TASAL	03/2026
CHECKED	P. BORDENAVE	03/2026

Registered Professional Engineer (Civil) CERTIFICATE NO. 86179 PHILIP BORDENAVE ARIZONA, U.S.A. Date Signed ..... Expires 3/31/2028

TYLin

FORCE MAIN GENERAL NOTES

SHEET U 11

TRACS NO.

c:\bms\pwcache\roberto.moreno@greeley-hansen.com\tylin americas\d0161149\TT0372_SU_Force_Main_GeneralNotes.dgn Roberto Moreno OpenRoads_Imperial 12:06:42 PM 5/1/2026 MCDOT_TYLIN_PRINT.tbl TYLI_GN_bwpdf.pltcfg

TYLI_GN_bwpdf.pltcfg
MCDOT_TYLIN_PRINT.tbl 5/6/2026 2:00:04 PM
OpenRoads_Imperial
Samim Tasal
c:\bmstylin_amerd\0161149\TT0372_SU_Force_Main_Profile_01.dgn

F.H.W.A. REGION	STATE	PROJECT NO.	SHEET NO.	TOTAL SHEETS	RECORD DRAWING
9	AZ	TT0372	78	224	

☐ REMOVAL / RELOCATE ☐

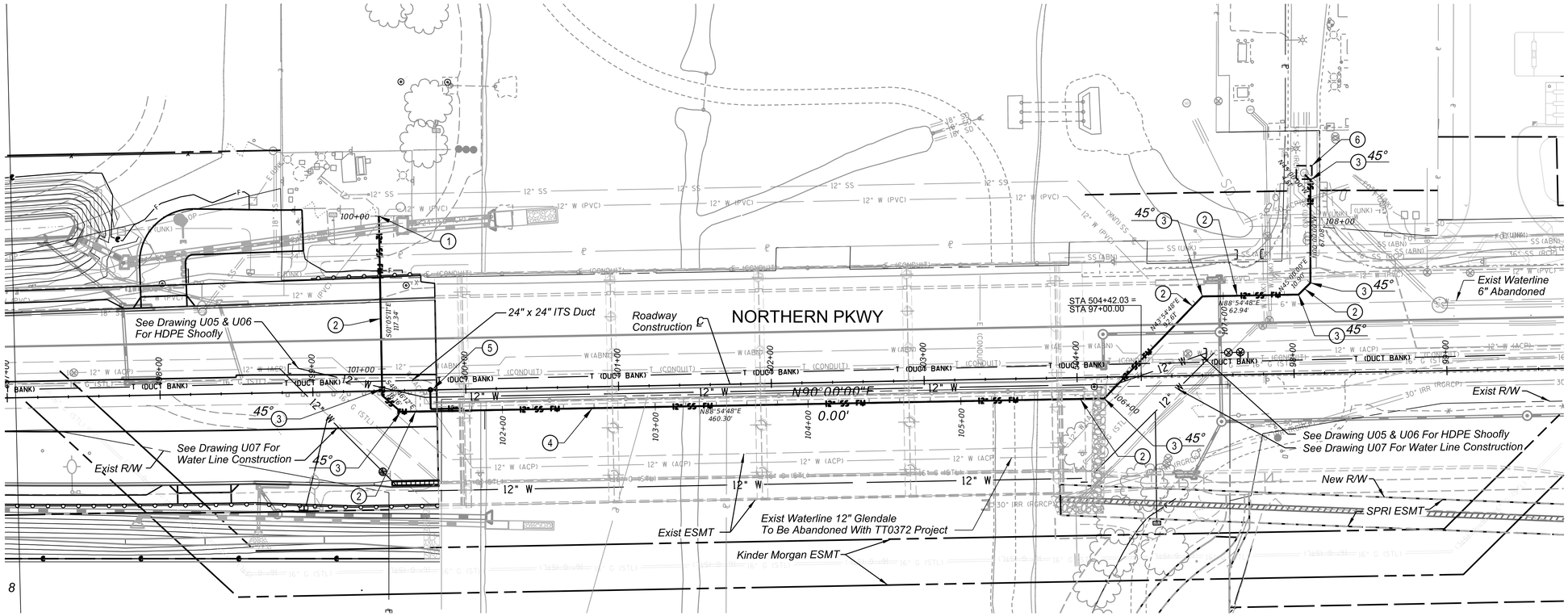

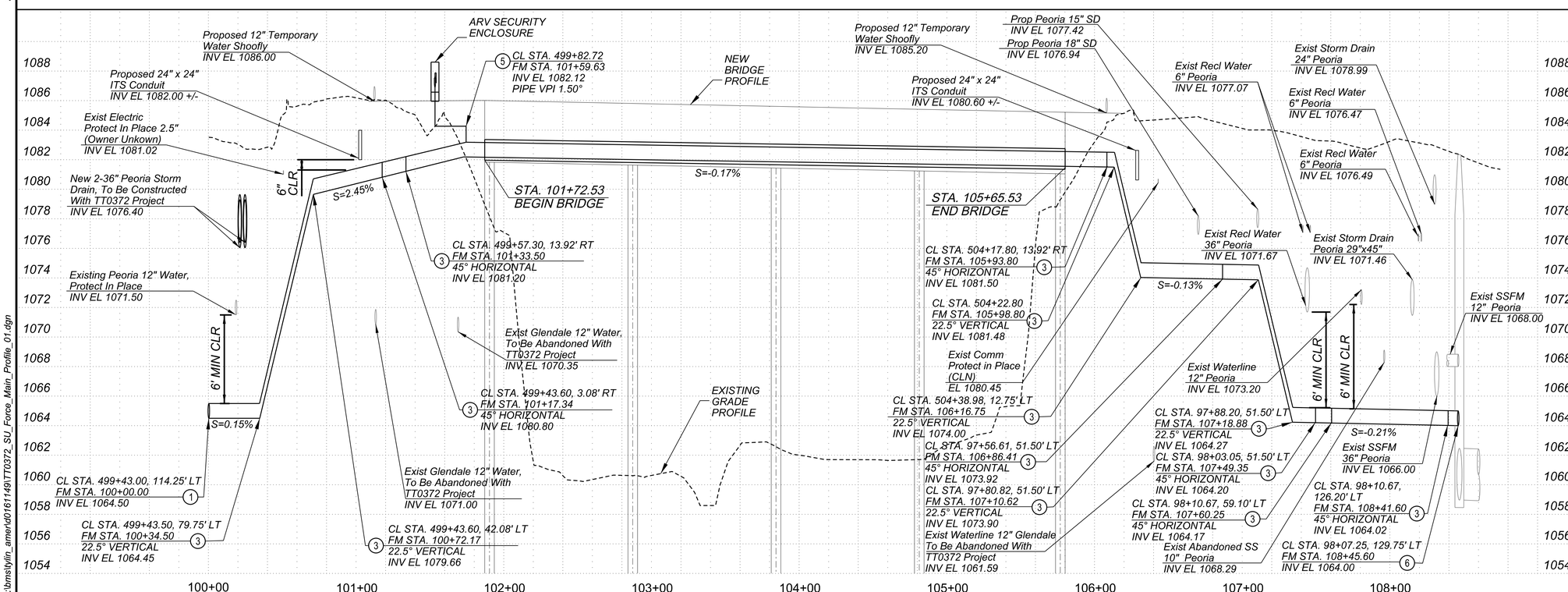

CONSTRUCTION

1. CONNECT TO 12" FORCEMAIN AT FENCELINE OF LIFT STATION WITH NEW 12" DIP TO HDPE RESTRAINED MECHANICAL COUPLING (EBAA IRON 3800 MEGA-COUPLING OR APPROVED EQUAL). — 1 EA
2. INSTALL NEW 12" DR 11 HDPE SS FM PER MAG SECTIONS 601 & 738. THERMAL WELD JOINTS PER MAG SECTION 738.3.3. BEDDING AND BACKFILL PER MAG DET. 200-3. — 435 LF
3. INSTALL NEW DR 11 HDPE FITTING (DEFLECTION PER PLAN). THERMAL WELD JOINTS PER MAG SECTION 738.3.3. — 13 EA
4. INSTALL NEW 20" STEEL CASING PIPE PER MAG SECTION 602 AND CITY OF PEORIA STD DETAIL 399. INSTALL NEW 12" DR 11 HDPE SSFM PIPE PER MAG SECTIONS 440, 601 AND 738 AND CITY OF PEORIA STD DETAIL 399. THERMAL WELD JOINTS PER MAG SECTION 783.3.3, BEDDING AND BACKFILL PER MAG DET. 200-3 FOR PIPE LOCATED AWAY FROM THE BRIDGE, OTHERWISE, HANG PIPE PER SHEETS SB03 AND SB23 FROM BRIDGE PLANS. — 440 LF
5. INSTALL NEW 2" COMBINATION AIR RELEASE/VACUUM VALVE PER MAG SECTION 630.6. SEE DETAIL ON SHEET U13. — 1 EA
6. CONNECT TO EXISTING 72" I.D. MH @ INV EL = 1064.0 +/- SEE NEW FORCEMAIN CONNECTION DETAIL ON SHEET U13. — 1 EA

HANGED PIPE NOTE:

STEEL CASING PIPE AND THE WATERLINE PIPE SHALL INCLUDE AT LEAST ONE EXPANSION JOINT WITH EBAA IRON 200 EXTEND OR APPROVED EQUAL. THE EXPANSION JOINT SHALL ACCOMODATE MINIMUM 3" MOVEMENT. THE LOCATION OF THE EXPANSION JOINT SHALL BE NEAR BY THE ABUTMENT AND DETERMINED BY THE CONTRACTOR. THE SELECTED EXPANSION DETAIL AND LOCATION SHALL BE SUBMITTED TO REVIEW BEFORE COMMENCING.

SCALE: Hor: 1"=40'
Vert: 1"=4'

40 0 40 80
SCALE IN FEET

Contact Arizona 811 Two Working Days Before You Dig
ARIZONA811 BLUE STAKE, INC.
Call 811 or Click Arizona811.com

NO.	REVISION	BY	DATE
3			
2			
1			

MARICOPA COUNTY

NORTHERN PARKWAY
103RD AVENUE TO 91ST AVENUE - PHASE 1
PROJECT NO. TT0372

	BY	DATE
DESIGNED	H. OWENS	03/2026
DRAWN	R. MORENO	03/2026
CHECKED	P. BORDENAVE	03/2026

Registered Professional Engineer (Civil) CERTIFICATE NO. 86179 PHILIP J. BORDENAVE Date Signed 03/06/26 ARIZONA, U.S.A. Expires 3/31/2026

TYLin

FORCE MAIN AT NEW RIVER BRIDGE
STA 100+00 TO 108+75

SHEET U 12

TRACS NO.

F.H.W.A. REGION	STATE	PROJECT NO.	SHEET NO.	TOTAL SHEETS	RECORD DRAWING
9	AZ	TT0372	79	224	

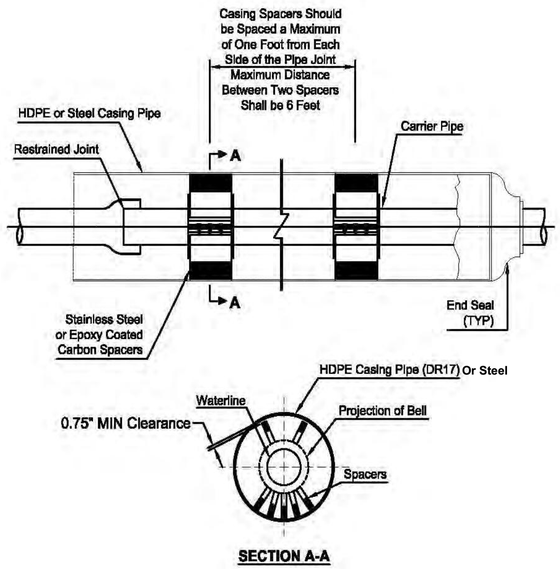

NOTES:

1. CASING SPACERS SHALL BE CASCADE WATERWORKS MFG, ADVANCED PRODUCTS AND SYSTEMS OR EQUAL
2. END SEALS SHALL BE PULL ON RUBBER WITH STAINLESS STEEL BANDS
3. CASING SHALL BE EITHER STEEL OR HIGH-DENSITY POLYETHYLENE PIPE (HDPE) DR 17, PE 3608-3408 DIPS. ALL HDPE CASING PIPE SHALL CONFORM TO ASTM D 3350-05 AND ANSI/AWWA C 906-2006 AND SHALL BE INSTALLED PER ASTM D 2774-04, JOINTING SHALL MEET EITHER ASTM F 2620 OR ASTM F 1290
4. CASING PIPE THICKNESS AND DIAMETER PER MAG 602.2

CITY OF PEORIA STANDARD DETAIL - PE-399
Casing with Carrier Pipe

Rev. 01/2019

THIS SUPPLEMENTAL STANDARD DETAIL FOR THE CITY OF PEORIA IS EFFECTIVE AS OF THE REVISION DATE LOCATED NEXT TO THE CITY SEAL

DETAIL 1/U13 - PE-399 CASING DETAIL

SCALE: NOT TO SCALE

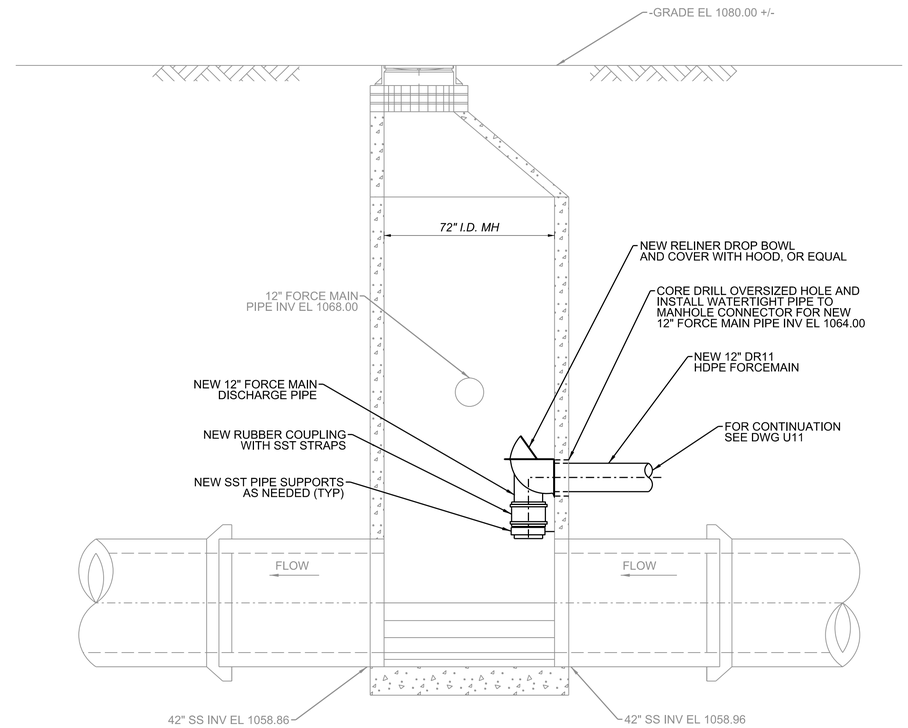

DETAIL 2/U13 - NEW FORCE MAIN DISCHARGE PIPE CONNECTION TO EXISTING MANHOLE

SCALE: 3/8" = 1'-0"

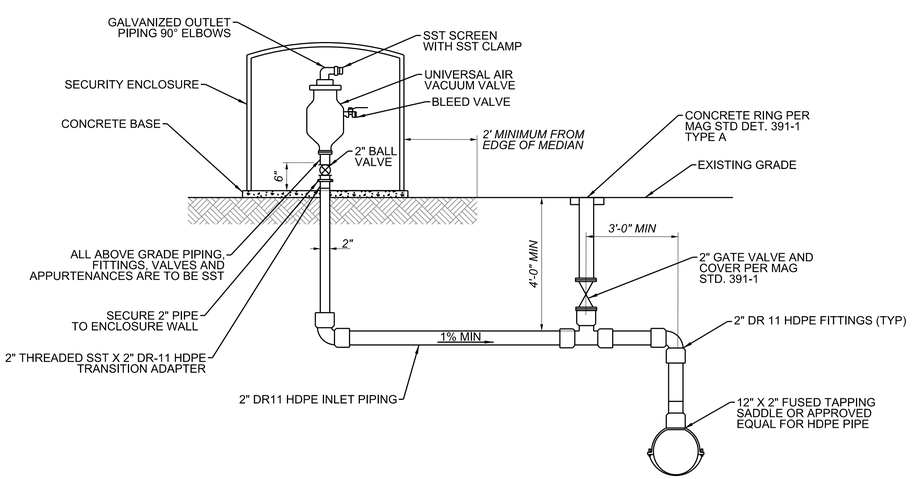

DETAILS 3/U13 - ARV DETAIL

SCALE: 3/4" = 1'-0"

-1 0 1 2 3 FT — 3/4"=1'-0"

-1 0 1 2 3 4 5 6 7 FT — 3/8"=1'-0"

Contact Arizona 811 Two Working Days Before You Dig
Call 811 or Click Arizona811.com

NO.	REVISION	BY	DATE
3			
2			
1			

MARICOPA COUNTY

NORTHERN PARKWAY
103RD AVENUE TO 91ST AVENUE - PHASE 1
PROJECT NO. TT0372

	BY	DATE
DESIGNED	H. OWENS	03/2026
DRAWN	S.TASAL	03/2026
CHECKED	P. BORDENAVE	03/2026

Registered Professional Engineer (Civil) CERTIFICATE NO. 36179 PHILIP BORDENAVE Signed ARIZONA, U.S.A. Expires 3/31/2029

TYLin

FORCE MAIN DETAIL SHEET 1

SHEET U 13

TRACS NO.

c:\bmstylin_amerid0161149\TT0372_SU_Force_Main_MH Detail.dgn

Samim Tasal OpenRoads_Imperial 1:43:56 PM 5/6/2026 MCDOT_TYLIN_PRINT.tbl TYLI_GN_bwpdf.pltcfg

F.H.W.A. REGION	STATE	PROJECT NO.	SHEET NO.	TOTAL SHEETS	RECORD DRAWING
9	AZ	TT0372	80	224	

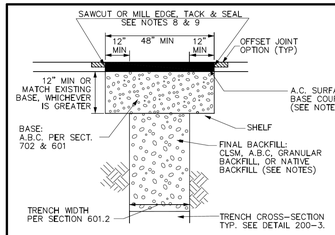

"T TOP" TRENCH REPAIR

(USE FOR TRANSVERSE TRENCH REPAIRS, SEE DETAIL 200-2)

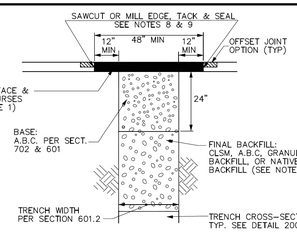

TYPE "A" TRENCH REPAIR

(USE FOR LONGITUDINAL TRENCH REPAIRS, SEE DETAIL 200-2)

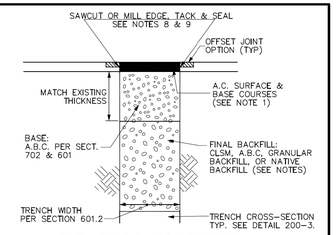

TYPE "B" TRENCH REPAIR

(USE FOR TRANSVERSE TRENCH REPAIRS IF SPECIFIED BY AGENCY)

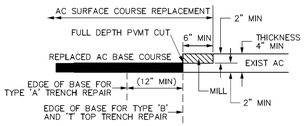

OFFSET JOINT

(FOR PAVEMENT ≥ 4" THICK)

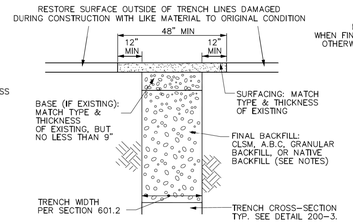

TYPE "D" TRENCH REPAIR

(TRENCH NOT UNDER CONCRETE OR ASPHALT PAVEMENT)

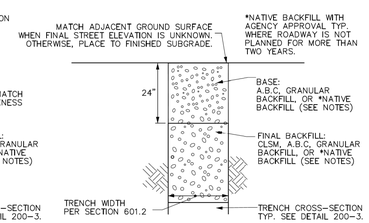

TYPE "E" TRENCH REPAIR

(TRENCH IN FUTURE ROADWAY PRISM OR ALLEY)

NOTES:

1. PAVEMENT MATCHING, BASE COURSES AND SURFACE REPLACEMENT SHALL BE IN ACCORDANCE WITH SECTION 336 UNLESS OTHERWISE SPECIFIED IN CONTRACT DOCUMENTS.
2. TRENCH EXCAVATION, BACKFILLING AND COMPACTION SHALL BE IN ACCORDANCE WITH SECTION 601. NATIVE BACKFILL SHALL ONLY BE USED WITH AGENCY APPROVAL.
3. CLSM SHALL BE 1/2-SACK OR 1-SACK PER SECTIONS 604 AND 728.
4. MATERIAL FOR FINAL BACKFILL AND BASE (IF APPLICABLE) SHALL BE AS NOTED HEREIN UNLESS OTHERWISE SPECIFIED IN CONTRACT DOCUMENTS.
5. FINAL BACKFILL SHALL BE CLSM FOR TRENCH DEPTHS GREATER THAN 4 FEET UNLESS A SAFE (OSHA COMPLIANT) WORKING SPACE AT LEAST 30" WIDE IS PROVIDED TO CONDUCT COMPACTION TESTING.
6. PROVIDE MINIMUM 12" WIDE SHELF AS SHOWN IN "T-TOP" TRENCH REPAIR AT ENDS OF TYPE "A" TRENCH REPAIR EXCEPT WHERE EDGE ABUTS EXISTING CONCRETE.
7. USE "T-TOP" PAVEMENT REPLACEMENT WHERE A TRENCH IS NOT PARALLEL TO A STREET OR GOES THROUGH AN INTERSECTION.
8. THE JOINT LOCATION OR JOINT CONFIGURATION MAY VARY FROM THAT SHOWN TO ELIMINATE REMNANTS, TO ELIMINATE FULL DEPTH SAWCUT JOINTS FROM BEING LOCATED WITHIN A WHEEL PATH AS REQUIRED BY SECTION 336, OR WHEN AN OFFSET JOINT IS CONSTRUCTED. SEE DETAIL 200-2 FOR REMNANT PAVEMENT REMOVAL REQUIREMENTS.
9. SAWCUT OR MILL EDGE AND APPLY TACK COAT. FOR PERMANENT PAVEMENT, APPLY 2-1/2" WIDE SECTION 337.2.1 COMPLIANT JOINT SEALANT AS REQUIRED BY AGENCY - SEE DETAIL ON 200-2.
10. EXPOSED COPPER OR POLYETHYLENE WATER PIPE UP TO 2" IN DIAMETER IN TRENCHES TO BE BACKFILLED WITH CLSM SHALL BE WRAPPED WITH MINIMUM 3/4" THICK PREFORMED PIPE-COVERING FOAM INSULATION BEFORE PLACING CLSM.

DETAIL NO.	MARICOPA ASSOCIATION of GOVERNMENTS	STANDARD DETAIL ENGLISH	TRENCH BACKFILL AND SURFACE REPLACEMENT	REVISED	DETAIL NO.
200-1				01-01-2025	200-1

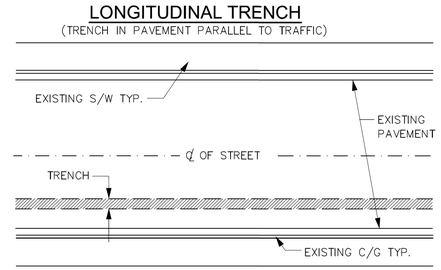

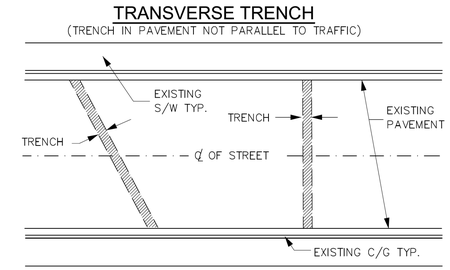

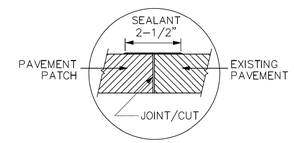

JOINT SEALANT DETAIL

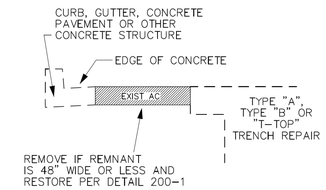

REMNANT PAVEMENT REMOVAL

NOTES:

1. SEE SECTION 601 FOR TRENCH EXCAVATION, BACKFILLING AND COMPACTION REQUIREMENTS.
2. SEE DETAIL 200-1 FOR DETAILED TRENCH REPAIR REQUIREMENTS FOR TRENCH TYPES NOTED HEREIN.
3. SEE DETAIL 211 FOR REQUIREMENTS REGARDING THE USE OF PLATING TRANSVERSE TRENCHES. USE OF STEEL PLATES SHALL NOT EXCEED 72 HOURS AFTER COMPLETION OF BACKFILL AND PRIOR TO FINAL PATCHING.

DETAIL NO.	MARICOPA ASSOCIATION of GOVERNMENTS	STANDARD DETAIL ENGLISH	TRENCH BACKFILL AND SURFACE REPLACEMENT	REVISED	DETAIL NO.
200-2				01-01-2023	200-2

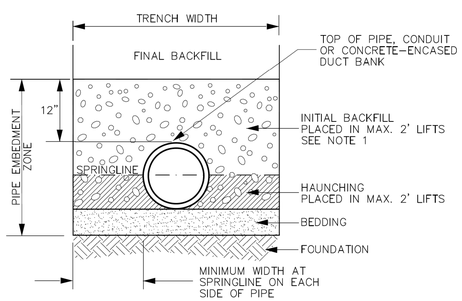

TRENCH-CROSS SECTION DETAIL
RIGID PIPE

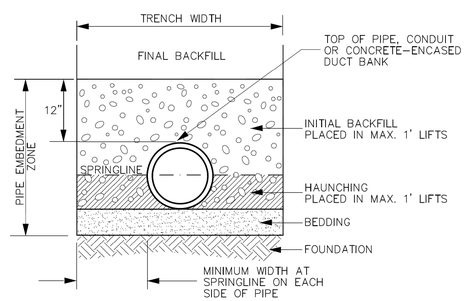

TRENCH-CROSS SECTION DETAIL
FLEXIBLE PIPE

NOTES:

1. BEDDING, HAUNCHING AND INITIAL BACKFILL MATERIAL SHALL BE ABC PER SECTION 702. SEE SECTION 601 FOR ALTERNATIVE MATERIALS TO BE USED WITH AGENCY APPROVAL INCLUDING MAXIMUM 1-1/2" NATIVE MATERIAL FOR CONCRETE PIPE INITIAL BACKFILL.
2. SEE SECTION 601 FOR ADDITIONAL TRENCH WIDTH, EXCAVATION, BACKFILLING AND COMPACTION REQUIREMENTS.
3. SEE SECTION 601 FOR PIPE MATERIALS CONSIDERED AS RIGID OR FLEXIBLE.

DETAIL NO.	MARICOPA ASSOCIATION of GOVERNMENTS	STANDARD DETAIL ENGLISH	TRENCH BACKFILL AND SURFACE REPLACEMENT	REVISED	DETAIL NO.
200-3				01-01-2023	200-3

Contact Arizona 811 Two Working Days Before You Dig
Call 811 or Click Arizona811.com

NO.	REVISION	BY	DATE
3			
2			
1			

MARICOPA COUNTY

NORTHERN PARKWAY
103RD AVENUE TO 91ST AVENUE - PHASE 1
PROJECT NO. TT0372

	BY	DATE
DESIGNED	H. OWENS	03/2026
DRAWN	S.TASAL	03/2026
CHECKED	P. BORDENAVE	03/2026

Registered Professional Engineer (CIVIL) CERTIFICATE NO. 86174 PHILIP BORDENAVE Date Signed ARIZONA, U.S.A. Expires 3/31/2026

TYLin

FORCE MAIN DETAIL SHEET 2

SHEET U 14

TRACS NO.

c:\bms\pwcache\roberto.moreno@greeley-hansen.com\ylin americas\d0161149\TT0372_SU_Force_Main_Standard Details.dgn Roberto Moreno OpenRoads_Imperial 12:17:27 PM 5/1/2026 MCDOT_TYLIN_PRINT.tbl TYLI_GN_bwpdf.pltcfg

TRAFFIC CONTROL GENERAL NOTES

1 *Traffic Control Plans shall adhere to the MCDOT Traffic Control Manual: Work Zone and Special Events.*

2 *Adjustments to the details of these traffic control plans and requirements may be necessary due to construction activities, as directed by the Engineer.*

3 *All existing signs in conflict with the construction signs shall be removed, relocated or covered in place, as directed by the Engineer. The Contractor shall store and reinstall items which have been removed or relocated in a manner approved by the Engineer.*

4 *All signing, striping, barrier and barricades shall be in accordance with the 2009 Manual on Uniform Traffic Control Devices (MUTCD) and ADOT supplement.*

5 *The Contractor shall be responsible for the sequence of activities in addition to those shown in the traffic control plans. The Contractor shall be responsible for developing a detailed traffic control plan and/or detour plan that is approved two weeks prior to any construction activities by MCDOT and any affected local agency.*

6 *All construction signs shall have black letters on a fluorescent retroreflective orange background, except as otherwise noted.*

7 *Sign mounting height is a minimum of seven feet as measured from the bottom of the sign to the near edge of the pavement. All other short-term signs may be installed on spring stands at the height recommended by the spring stand manufacturer.*

8 *Flags shall be mounted on top of all construction signs except the "End Road Work" sign. Type "A" flashing warning lights shall be required on all nighttime construction signs except the "End Road Work" sign.*

9 *A type "C" steady-burning yellow light shall be mounted on every drum, type II barricade and vertical panel used for channelization during nighttime activities.*

10 *An adequate number of type III barricades shall be placed in order to close the roadway. A type "A" flashing warning light shall be mounted on each end of each barricade during nighttime activities.*

11 *Unless otherwise specified in the traffic control plans, portable concrete barrier shall be 32" per ADOT Std Dwg No. C-3. For sand barrel crash cushion details, see ADOT Std Dwg Nos. C-1 and C-2. Barrier markers conforming to ADOT Std Dwg Nos. M-32 and M-33 shall be installed at 25 foot spacing. The installed price for the marker shall be considered incidental to the cost of the barrier.*

12 *Temporary striping shall be standard reflectorized traffic paint, unless otherwise noted on the plans.*

13 *All existing pavement markings in conflict with the traffic control striping plan shall be obliterated.*

14 *When stripe obliteration is necessary, it shall be accomplished by a method that is in compliance with OSHA's 29 CFR, part 1926, Lead Exposure in Construction; Interim Final Rule. If the lead exposure prevention measures are required, the Contractor shall ensure that all of the Contractor's personnel and all subcontractors and agency personnel present on the job site are notified of the activity and advised of necessary precautions to be taken to avoid contamination by lead compounds. The Contractor shall submit a lead exposure prevention plan to the Engineer for review a minimum of 48 hours prior to the start of the any striping obliteration activities. Painting over the striping does not constitute stripe obliteration.*

15 *Construction zone speed limit signing is preliminary and is subject to review and change by the Engineer as dictated by field conditions.*

16 *Construction signs shall not be displayed to the traffic more than 24 hours prior to the start of construction. These signs may be installed sooner but they must be covered or turned away from the traffic. The cost for covering or turning them shall be considered part of the sign installation cost. No further compensation will be made. These signs shall be removed within 24 hours after the completion of the construction activities.*

17 *The Contractor shall install changeable message boards as directed by the Engineer. The messages shall be displayed such that the entire message can be read twice at operating speed from no further than 650 feet. The Contractor shall locate the changeable message boards just off the paved roadway in compliance with the clear zone requirements or as directed by the Engineer. The Engineer will determine the message on the changeable message boards to coincide with construction activities. Changeable message boards shall be in place at least 7 days prior to construction activities. For each changeable message board used on the project, the Contractor shall position ten type I or type II barricades - each affixed with type "C" steady-burning lights for nighttime use - around the changeable message board. The Contrator shall only position changeable message boards where and when approved by the Engineer.*

18 *Portable concrete barrier with sand barrel crash cushions will be required where the clear zone to construction activities can not be maintained. If there is not enough space for sand barrels, temporary impact attenuators may be used instead.*

19 *The Contractor shall be responsible for maintaining access to the residences and businesses in the area during all construction activities.*

20 *All drawings are schematic only and not to scale.*

Contact Arizona 811 Two Working Days Before You Dig
ARIZONA811 BLUE STAKE, INC.
Call 811 or Click Arizona811.com

NO.	REVISION	BY	DATE
3			
2			
1			

MARICOPA COUNTY

NORTHERN PARKWAY
103RD AVENUE TO 91ST AVENUE - PHASE 1
PROJECT NO. TT0372

	BY	DATE
DESIGNED	A. FREDE	04/2026
DRAWN	I. POPOVICI	04/2026
CHECKED	C. LEMKA	04/2026

Registered Professional Engineer (Civil) CERTIFICATE NO. 79488 ALLISON R. FREDE Date Signed 04/30/26 ARIZONA, U.S.A.

BURGESS & NIPLE
1230 W. WASHINGTON ST. SUITE 511
TEMPE, AZ 85288

TRAFFIC CONTROL GENERAL NOTES

SHEET TC01

TRACS NO.

11:08:11 PM4/30/2026
Projects\221991.00_TT0372\600_CADD\05_Official\Dgn_PHASE 1\Sheets\B&N\TT0372_ST_TrafficControl_Notes_01.dgn

TRAFFIC CONTROL QUANTITIES

DESCRIPTION OF WORK	UNIT	PROJECT ADVANCE SIGNING	PHASE 1	PHASE 2	PHASE 3A	PHASE 3B	PHASE 4	TOTAL
Estimated Calendar Days	DAY	264	198	30	30	30	6	264
Barricade: Type II, Vertical Panel, Tubular Marker	EA/DAY	2,640	-	3,390	1,980	4,530	774	13,314
Barricade: Type III	EA/DAY	-	-	240	270	270	12	792
Portable Sign Stand: Rigid	EA/DAY	-	5,544	840	840	840	60	8,124
Flashing Warning Light: Type A	EA/DAY	6,336	5,544	840	840	840	60	14,460
Steady-Burn Warning Light (Type C)	EA/DAY	2,640	-	-	-	-	-	2,640
Embedded Sign Post	EA/DAY	7,656	-	-	-	-	-	7,656
Small Temporary Signs (Less Than 10 SF)	EA/DAY	6,336	4,752	720	720	720	48	13,296
Large Temporary Signs (10 SF Or More)	EA/DAY	1,320	792	120	120	120	12	2,484
Flashing Arrow Panel	EA/DAY	264	-	60	60	60	-	444
Uniformed Off-Duty Law Enforcement Officer	ALLOWANCE	-	-	300	300	300	-	900
Portable Concrete Barrier, PCB	LF	-	-	3067	959	-	-	4,026
Portable Concrete Barrier Relocation	LF	-	-	-	3067	3067	-	6,134
Impact Attenuation Device	EA	-	-	2	-	-	-	2
Impact Attenuation Device Relocation	EA	-	-	-	2	2	-	4
Truck-Mounted Attenuator	DAY	264	-	60	60	60	-	444
Changeable Message Board	DAY	538	-	-	-	-	-	528
Temporary Traffic Control 4" White Traffic Paint Stripe	LF	-	-	6,239	-	163	-	6,402
Temporary Traffic Control 4" Yellow Traffic Paint Stripe	LF	-	-	7,120	4,088	3,006	-	14,214

Contact Arizona 811 Two Working Days Before You Dig
Call 811 or Click Arizona811.com

NO.	REVISION	BY	DATE
3			
2			
1			

MARICOPA COUNTY

NORTHERN PARKWAY
103RD AVENUE TO 91ST AVENUE - PHASE 1
PROJECT NO. TT0372

	BY	DATE
DESIGNED	A. FREDE	04/2026
DRAWN	I. POPOVICI	04/2026
CHECKED	C. LEMKA	04/2026

Registered Professional Engineer (Civil) CERTIFICATE NO. 79480 ALLISON R. FREDE Signed 04/30/2026 ARIZONA, U.S.A.

BURGESS & NIPLE
1230 W. WASHINGTON ST. SUITE 511
TEMPE, AZ 85288

TRAFFIC CONTROL QUANTITIES | SHEET TC02

TRACS NO.

6:34:17 PM 5/5/2026
Projects\221991.00_TT0372\600_CADD\05_Official\Dgn_PHASE 1\Sheets\B&N\TT0372_ST_TrafficControl_Quantities_01.dgn

MAINTENANCE OF TRAFFIC

Phasing	*Construction Activity*	*Maintenance of Traffic*	*Traffic Control Plan*
Advanced Warning Sign Installation	*Place advanced warning signs*	*Maintain traffic per existing lane configurations on Northern Ave, and 99th Ave.* *Maintain bicycle and pedestrian access per existing configurations.*	*See sheet TC07. Utilize MCDOT typ app TC-101 for sign installations, as needed.* *Place signs on embedded posts.*
Phase 1: Bridge Construction	*Construct new EB New River Bridge.*	*Maintain traffic per existing lane configurations on Northern Ave, and 99th Ave.* *Maintain bicycle and pedestrian access per existing configurations.*	*See sheets TC08-TC10.*
Phase 2: Northern Ave South Roadway Construction	*Construct Northern Ave south roadway pavement and curb.*	*Maintain traffic on Northern Ave and 99th Ave. Maintain pedestrian access along WB Northern Ave.*	*See sheets TC11-TC15.*
Phase 3A: Northern Ave North Roadway Construction	*Construct Northern Ave north roadway pavement and curb.*	*Maintain traffic on Northern Ave and 99th Ave. Maintain pedestrian access along EB Northern Ave.* *Maintain a minimum of one lane of traffic on Northern Avenue in each direction at all times.*	*See sheets TC16-TC19.*
Phase 3B: Northern Ave North Roadway Construction	*Construct Northern Ave center roadway pavement.*	*Maintain traffic on Northern Ave and 99th Ave.* *Maintain pedestrian access along EB Northern Ave.* *Maintain a minimum of one lane of traffic on Northern Avenue in each direction at all times.*	*See sheets TC20-TC23.*
Phase 4: 99th Ave Paving Construction	*Construct 99th Ave roadway pavement.*	*Maintain traffic on 99th Ave. Maintain pedestrian access along EB Northern Ave.*	*See sheets TC24-TC25.*
Signing and Striping	*Install permanent marking and signing on Northern Pkwy mainline.*	*Short term lane closures.*	*Utilize SA-19 of the 2025 ADOT TCDG, as needed.*

Contact Arizona 811 Two Working Days Before You Dig
Call 811 or Click Arizona811.com

NO.	REVISION	BY	DATE
3			
2			
1			

MARICOPA COUNTY

NORTHERN PARKWAY
103RD AVENUE TO 91ST AVENUE - PHASE 1
PROJECT NO. TT0372

	BY	DATE
DESIGNED	A. FREDE	04/2026
DRAWN	I. POPOVICI	04/2026
CHECKED	C. LEMKA	04/2026

Registered Professional Engineer (Civil) CERTIFICATE NO. 79480 ALLISON R. FREDE Date Signed 04/30/26 ARIZONA, U.S.A.

BURGESS & NIPLE
1230 W. WASHINGTON ST. SUITE 511
TEMPE, AZ 85288

MAINTENANCE OF TRAFFIC

SHEET TC03

TRACS NO.

Projects\221991.00_TT0372\600_CADD\05_Official\Dgn_PHASE_1\Sheets\B&N\TT0372_ST_TrafficControl_MOT_01.dgn
11:09:01 PM\4/30/2026

F.H.W.A. REGION	STATE	PROJECT NO.	SHEET NO.	TOTAL SHEETS	RECORD DRAWING
9	AZ	TT0372	84	224	

LEGEND

Work Area

Direction of Travel

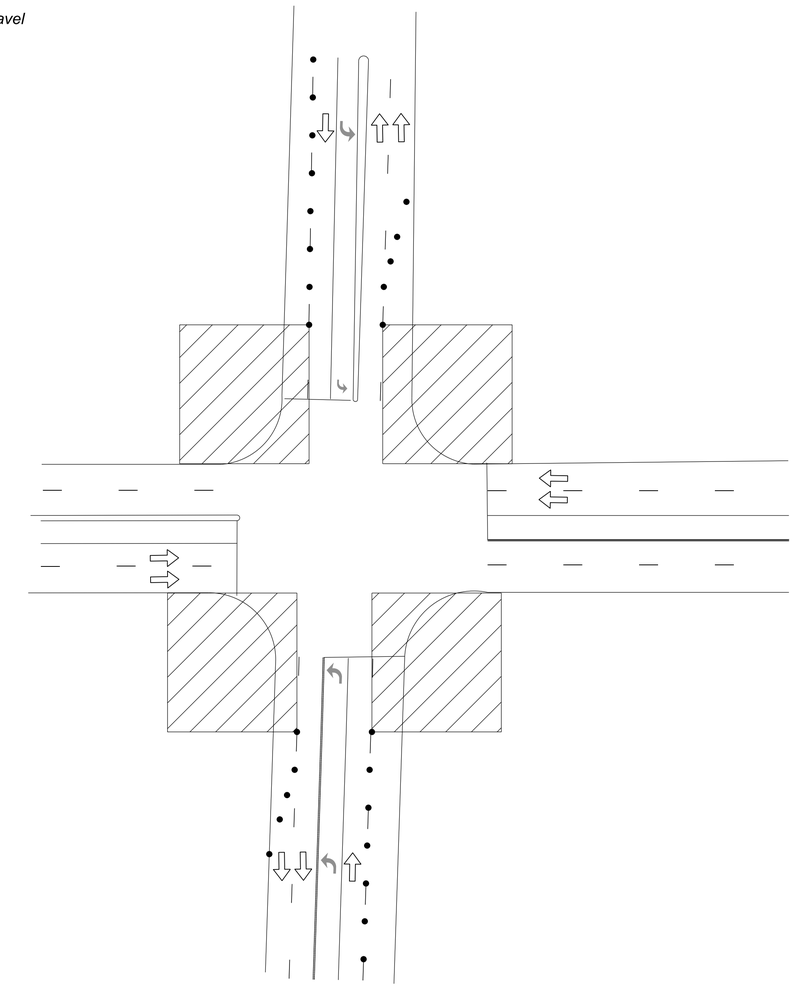

PHASE 1

SIGNALZED INTERSECTION MODIFICATION WITH MEDIAN.

NOTE: PROVIDE TEMPORARY TRAFFIC SIGNAL DURING CONSTRUCTION.
PERMANENT TRAFFIC SIGNAL TO BE CONSTRUCTED IN PHASE 1.

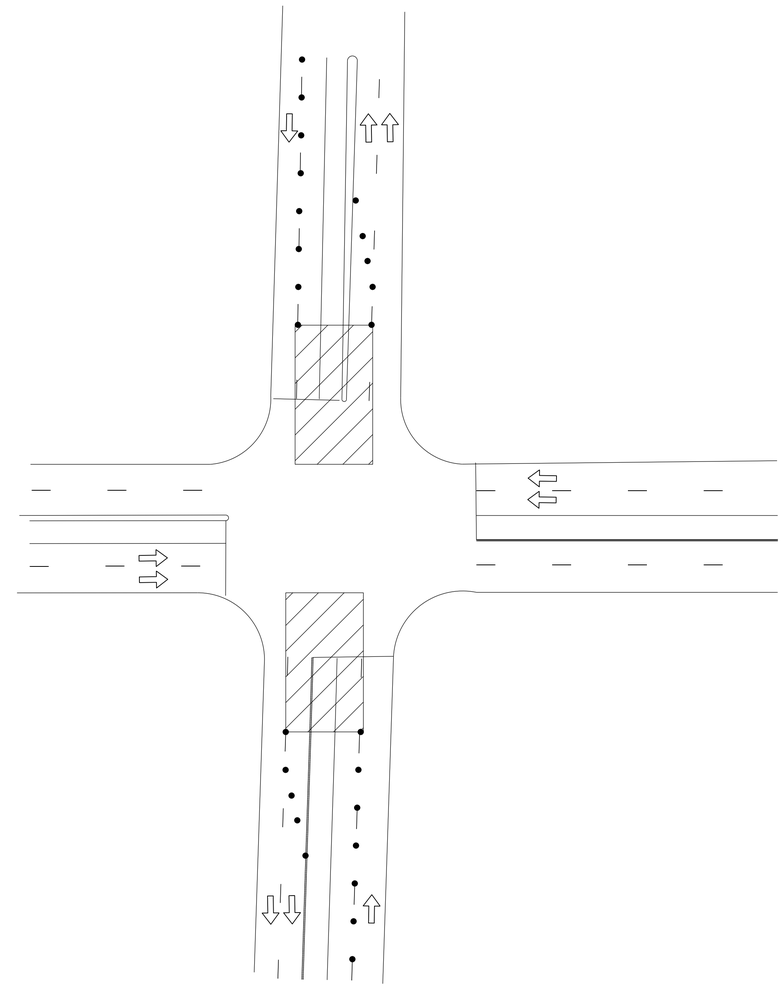

PHASE 2

SIGNALZED INTERSECTION MODIFICATION WITH MEDIAN.

NOTE: UTILIZE NEW TRAFFIC SIGNAL FOR TEMPORARY LANE ALIGNMENTS.
LEFT TURNS RESTRICTED.

Contact Arizona 811 Two Working Days Before You Dig
ARIZONA811 BLUE STAKE, INC.
Call 811 or Click Arizona811.com

NO.	REVISION	BY	DATE
3			
2			
1			

MARICOPA COUNTY

NORTHERN PARKWAY
103RD AVENUE TO 91ST AVENUE - PHASE 1
PROJECT NO. TT0372

	BY	DATE
DESIGNED	A. FREDE	04/2026
DRAWN	I. POPOVICI	04/2026
CHECKED	C. LEMKA	04/2026

Registered Professional Engineer (Civil) CERTIFICATE NO. 79480 ALLISON R. FREDE Signed 04/30/26 ARIZONA, U.S.A.

BURGESS & NIPLE
1230 W. WASHINGTON ST. SUITE 511
TEMPE, AZ 85288

TRAFFIC CONTROL DETAILS

SHEET TC04

TRACS NO.

11:09:22 PM4/30/2026
Projects\221991.00_TT0372\600_CADD\05_Official\Dgn_PHASE 1\Sheets\B&N\TT0372_ST_TrafficControl_Details_01.dgn

F.H.W.A. REGION	STATE	PROJECT NO.	SHEET NO.	TOTAL SHEETS	RECORD DRAWING
9	AZ	TT0372	85	224	

LEGEND

Work Area

Direction of Travel

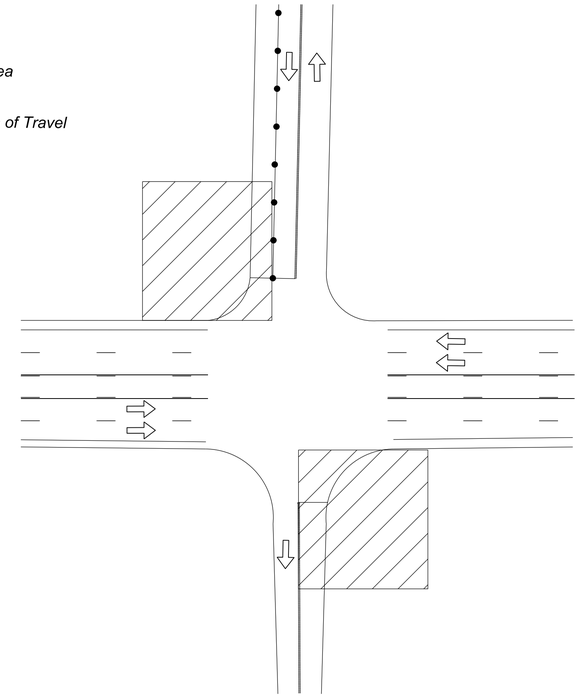

PHASE 1

SIGNALZED INTERSECTION MODIFICATION.

NOTE: PROVIDE TEMPORARY TRAFFIC SIGNAL DURING CONSTRUCTION.

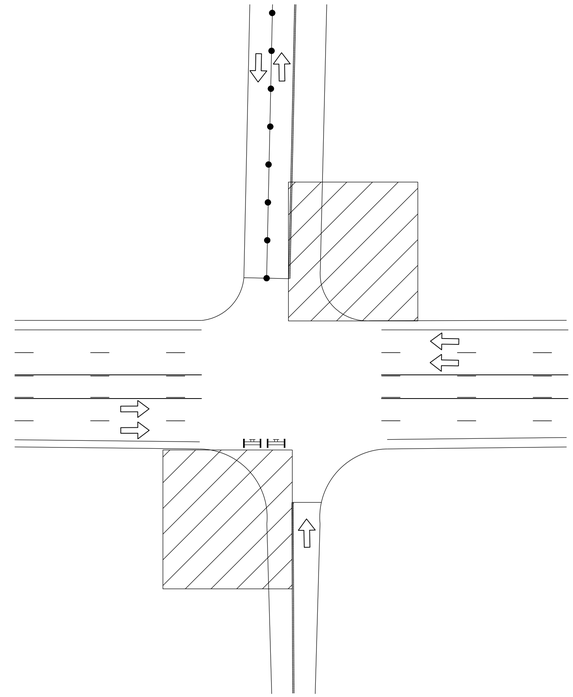

PHASE 2

SIGNALZED INTERSECTION MODIFICATION.

NOTE: PROVIDE TEMPORARY TRAFFIC SIGNAL DURING CONSTRUCTION.

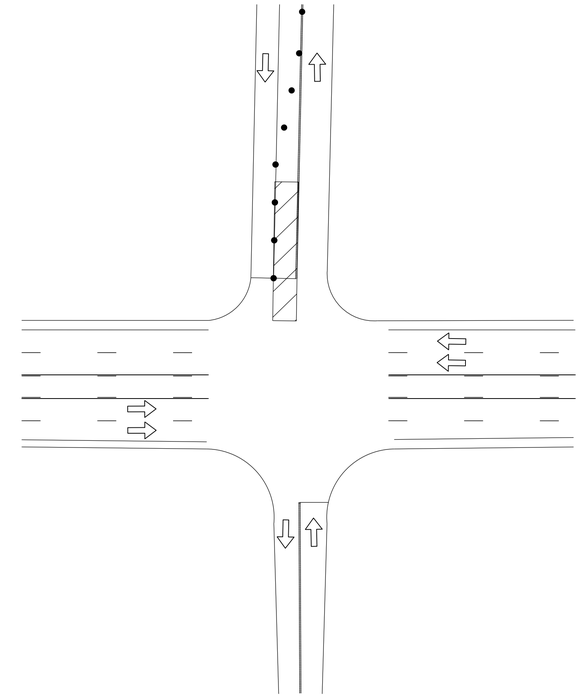

PHASE 3

SIGNALZED INTERSECTION MODIFICATION.

NOTE: UTILIZE NEW TRAFFIC SIGNAL FOR TEMPORARY LANE ALIGNMENTS.
LEFT TURNS RESTRICTED.

Contact Arizona 811 Two Working Days Before You Dig
ARIZONA811 BLUE STAKE, INC.
Call 811 or Click Arizona811.com

NO.	REVISION	BY	DATE
3			
2			
1			

MARICOPA COUNTY

NORTHERN PARKWAY
103RD AVENUE TO 91ST AVENUE - PHASE 1
PROJECT NO. TT0372

	BY	DATE
DESIGNED	A. FREDE	04/2026
DRAWN	I. POPOVICI	04/2026
CHECKED	C. LEMKA	04/2026

Registered Professional Engineer (Civil)
CERTIFICATE NO. 79488
ALLISON R. FREDE
Date Signed 04/30/26
ARIZONA, U.S.A.

BURGESS & NIPLE
1230 W. WASHINGTON ST. SUITE 511
TEMPE, AZ 85288

TRAFFIC CONTROL DETAILS

SHEET TC05

TRACS NO.

Projects\221991.00_TT0372\600_CADD\05_Official\Dgn_PHASE 1\Sheets\B&N\TT0372_ST_TrafficControl_Details_02.dgn
11:11:30 PM\4/30/2026

F.H.W.A. REGION	STATE	PROJECT NO.	SHEET NO.	TOTAL SHEETS	RECORD DRAWING
9	AZ	TT0372	86	224	

LEGEND

Work Area

Direction of Travel

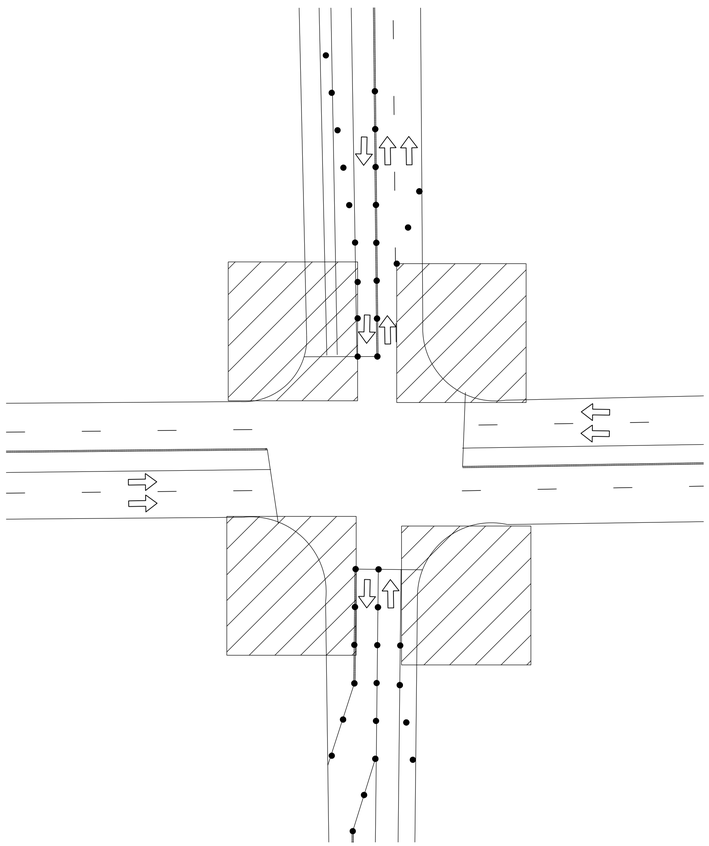

PHASE 1

SIGNALZED INTERSECTION MODIFICATION.

NOTE: PROVIDE TEMPORARY TRAFFIC SIGNAL DURING CONSTRUCTION.
PERMANENT TRAFFIC SIGNAL TO BE CONSTRUCTED IN PHASE 1.

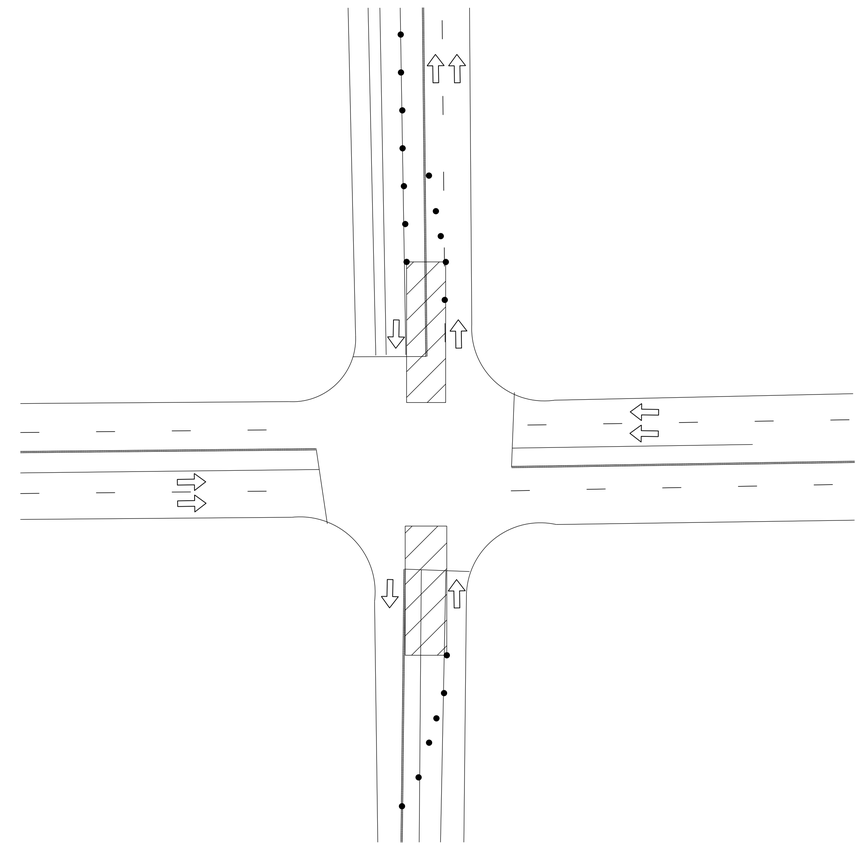

PHASE 2

SIGNALZED INTERSECTION MODIFICATION.

NOTE: UTILIZE NEW TRAFFIC SIGNAL FOR TEMPORARY LANE ALIGNMENTS.
LEFT TURNS RESTRICTED.

NO.	REVISION	BY	DATE
3			
2			
1			

MARICOPA COUNTY

NORTHERN PARKWAY
103RD AVENUE TO 91ST AVENUE - PHASE 1
PROJECT NO. TT0372

	BY	DATE
DESIGNED	A. FREDE	04/2026
DRAWN	I. POPOVICI	04/2026
CHECKED	C. LEMKA	04/2026

Registered Professional Engineer (Civil) CERTIFICATE NO. 79488 ALLISON R. FREDE Date Signed 04/30/26 ARIZONA, U.S.A.

BURGESS & NIPLE
1230 W. WASHINGTON ST. SUITE 511
TEMPE, AZ 85288

Contact Arizona 811 Two Working Days Before You Dig
ARIZONA811 BLUE STAKE, INC.
Call 811 or Click Arizona811.com

TRAFFIC CONTROL DETAILS

SHEET TC06

TRACS NO.

Projects\221991.00_TT0372\600_CADD\05_Official\Dgn_PHASE_1\Sheets\B&N\TT0372_ST_TrafficControl_Details_03.dgn

11:09:40 PM 04/30/2026

F.H.W.A. REGION	STATE	PROJECT NO.	SHEET NO.	TOTAL SHEETS	RECORD DRAWING
9	AZ	TT0372	87	224	

SIGN LEGEND:

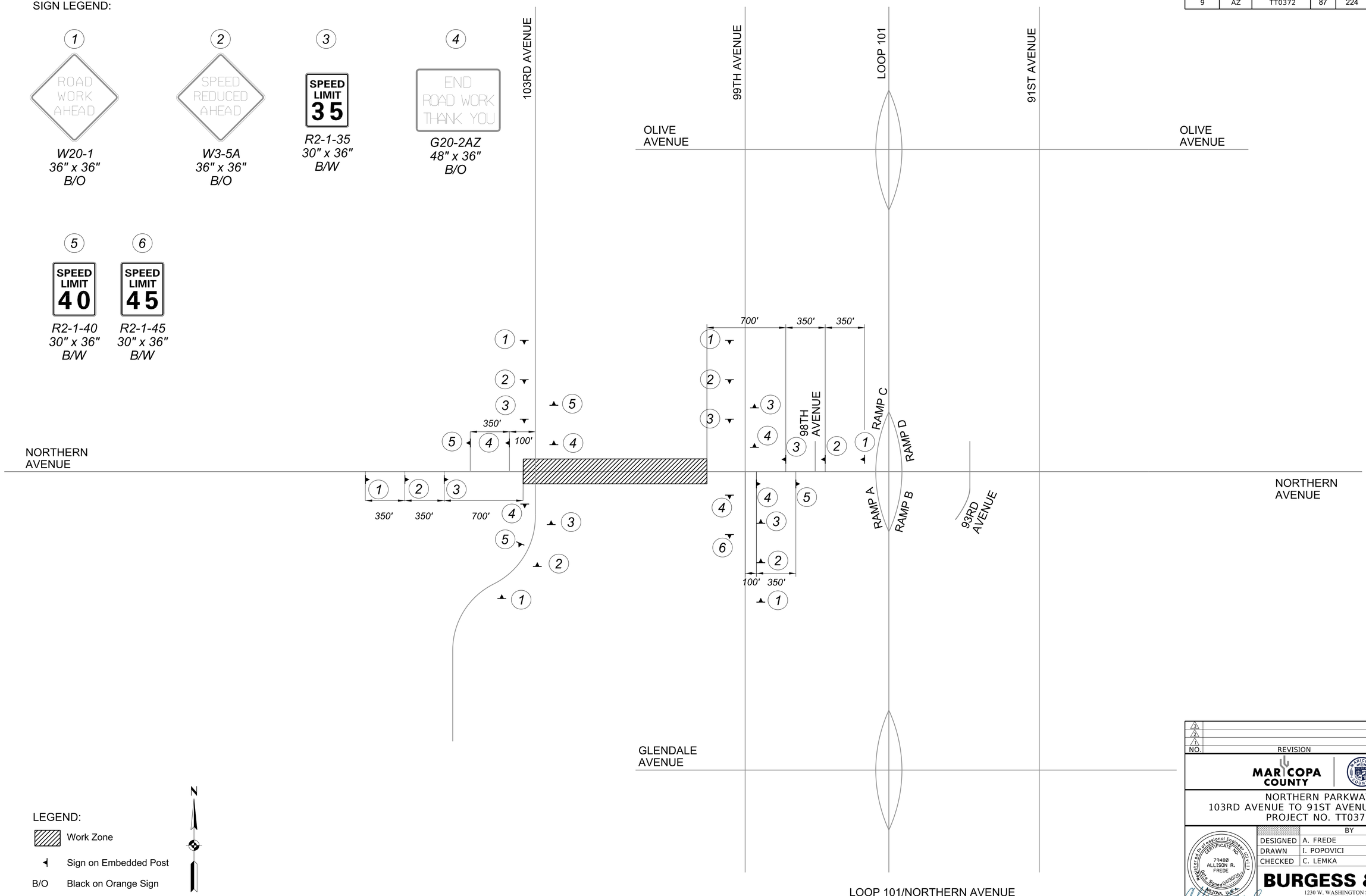

LEGEND:

- Work Zone
- Sign on Embedded Post
- B/O Black on Orange Sign
- B/W Black on White Sign

N

LOOP 101/NORTHERN AVENUE
RAMP CLOSURE

NO.	REVISION	BY	DATE
3			
2			
1			

MARICOPA COUNTY

NORTHERN PARKWAY
103RD AVENUE TO 91ST AVENUE - PHASE 1
PROJECT NO. TT0372

	BY	DATE
DESIGNED	A. FREDE	04/2026
DRAWN	I. POPOVICI	04/2026
CHECKED	C. LEMKA	04/2026

Registered Professional Engineer (Civil) CERTIFICATE NO. 79480 ALLISON R. FREDE Date Signed 04/30/26 ARIZONA, U.S.A.

BURGESS & NIPLE
1230 W. WASHINGTON ST. SUITE 511
TEMPE, AZ 85288

ADVANCED WARNING SIGNS

SHEET TC07

TRACS NO.

Projects\221991.00_TT0372\600_CADD\05_Official\Dgn_PHASE_1\Sheets\B&N\TT0372_ST_TrafficControl_AWS_01.dgn
11:10:34 PM 4/30/2026

F.H.W.A. REGION	STATE	PROJECT NO.	SHEET NO.	TOTAL SHEETS	RECORD DRAWING
9	AZ	TT0372	88	224	

NO WORK ON THIS SHEET

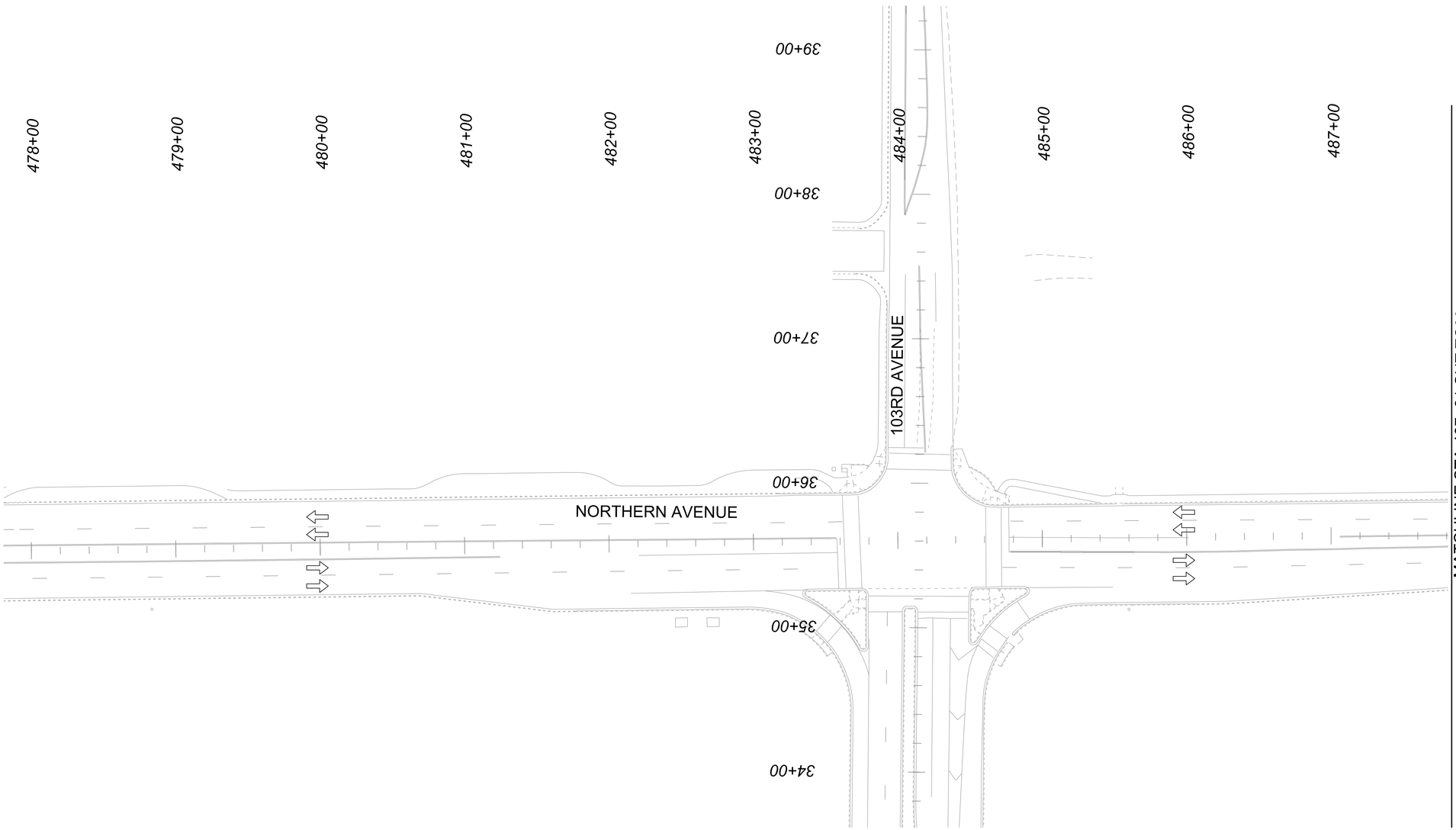

N

LEGEND

- Temporary Construction
- Permanent Construction
- Direction of Travel
- Type III Barricade
- Traffic Delineator
- Concrete Barrier

SCALE: Hor: 1"=40'
Vert: NA

40 0 40 80
SCALE IN FEET

NO.	REVISION	BY	DATE
3			
2			
1			

MARICOPA COUNTY

NORTHERN PARKWAY
103RD AVENUE TO 91ST AVENUE - PHASE 1
PROJECT NO. TT0372

	BY	DATE
DESIGNED	A. FREDE	04/2026
DRAWN	I. POPOVICI	04/2026
CHECKED	C. LEMKA	04/2026

Registered Professional Engineer (Civil)
CERTIFICATE NO. 79480
ALLISON R. FREDE
Date Signed 04/30/26
ARIZONA U.S.A.

BURGESS & NIPLE
1230 W. WASHINGTON ST. SUITE 511
TEMPE, AZ 85288

Contact Arizona 811 Two Working Days Before You Dig
ARIZONA811 BLUE STAKE, INC.
Call 811 or Click Arizona811.com

TRAFFIC CONTROL PHASE 1
NORTHERN AVENUE

SHEET TC08

TRACS NO.

11:11:22 PM4/30/2026

Projects\221991.00_TT0372\600_CADD\05_Official\Dgn_PHASE 1\Sheets\B&N\TT0372_ST_TrafficControl_PH1_01.dgn

F.H.W.A. REGION	STATE	PROJECT NO.	SHEET NO.	TOTAL SHEETS	RECORD DRAWING
9	AZ	TT0372	89	224	

NO WORK ON THIS SHEET

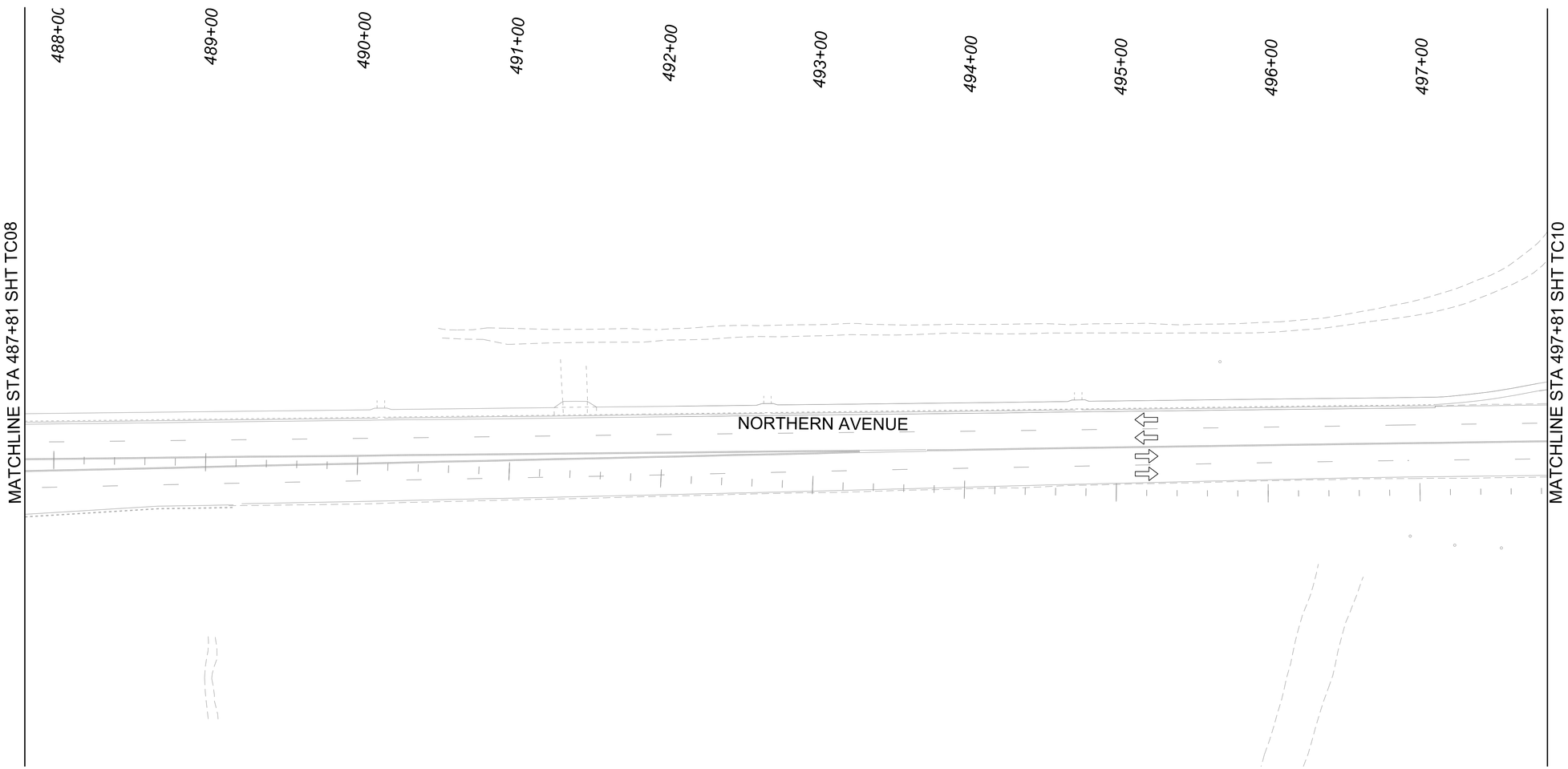

N

LEGEND

- Temporary Construction
- Permanent Construction
- Direction of Travel
- Type III Barricade
- Traffic Delineator
- Concrete Barrier

SCALE: Hor: 1"=40'
Vert: NA

40 0 40 80
SCALE IN FEET

NO.	REVISION	BY	DATE
3			
2			
1			

MARICOPA COUNTY

NORTHERN PARKWAY
103RD AVENUE TO 91ST AVENUE - PHASE 1
PROJECT NO. TT0372

	BY	DATE
DESIGNED	A. FREDE	04/2026
DRAWN	I. POPOVICI	04/2026
CHECKED	C. LEMKA	04/2026

Registered Professional Engineer (Civil) CERTIFICATE NO. 79480 ALLISON R. FREDE Date Signed 04/30/26 ARIZONA, U.S.A.

BURGESS & NIPLE
1230 W. WASHINGTON ST. SUITE 511
TEMPE, AZ 85288

Contact Arizona 811 Two Working Days Before You Dig
ARIZONA811 BLUE STAKE, INC.
Call 811 or Click Arizona811.com

TRAFFIC CONTROL PHASE 1
NORTHERN AVENUE

SHEET TC09

TRACS NO.

11:10:37 PM4/30/2026

Projects\221991.00_TT0372\600_CADD\05_Official\Dgn_PHASE_1\Sheets\B&N\TT0372_ST_TrafficControl_PH1_02.dgn

F.H.W.A. REGION	STATE	PROJECT NO.	SHEET NO.	TOTAL SHEETS	RECORD DRAWING
9	AZ	TT0372	90	224	

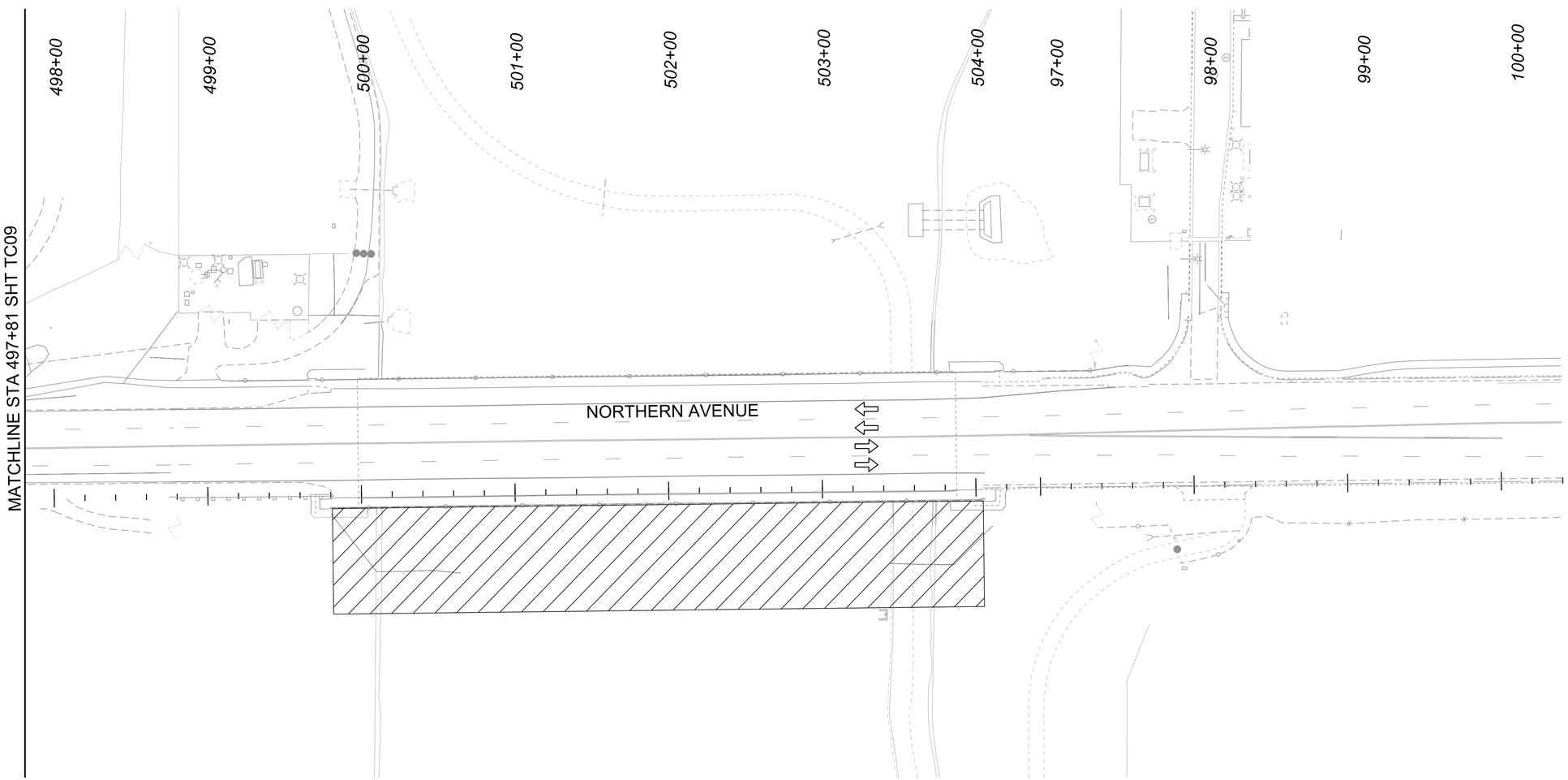

N

LEGEND

- Temporary Construction
- Permanent Construction
- Direction of Travel
- Type III Barricade
- Traffic Delineator
- Concrete Barrier

SCALE: Hor: 1"=40'
Vert: NA

40 0 40 80
SCALE IN FEET

NO.	REVISION	BY	DATE
3			
2			
1			

MARICOPA COUNTY

NORTHERN PARKWAY
103RD AVENUE TO 91ST AVENUE - PHASE 1
PROJECT NO. TT0372

	BY	DATE
DESIGNED	A. FREDE	04/2026
DRAWN	I. POPOVICI	04/2026
CHECKED	C. LEMKA	04/2026

Registered Professional Engineer (Civil) CERTIFICATE NO. 79480 ALLISON R. FREDE Date Signed 04/30/26 ARIZONA, U.S.A.

BURGESS & NIPLE
1230 W. WASHINGTON ST. SUITE 511
TEMPE, AZ 85288

Contact Arizona 811 Two Working Days Before You Dig
ARIZONA811 BLUE STAKE, INC.
Call 811 or Click Arizona811.com

TRAFFIC CONTROL PHASE 1
NORTHERN AVENUE

SHEET TC10

TRACS NO.

6:00:50 PM 5/7/2026

Projects\221991.00_TT0372\600_CADD\05_Official\Dgn_PHASE 1\Sheets\B&N\TT0372_ST_TrafficControl_PH1_03.dgn

F.H.W.A. REGION	STATE	PROJECT NO.	SHEET NO.	TOTAL SHEETS	RECORD DRAWING
9	AZ	TT0372	91	224	

LEGEND

- Temporary Construction
- Permanent Construction
- Direction of Travel
- Type III Barricade
- Traffic Delineator
- Concrete Barrier

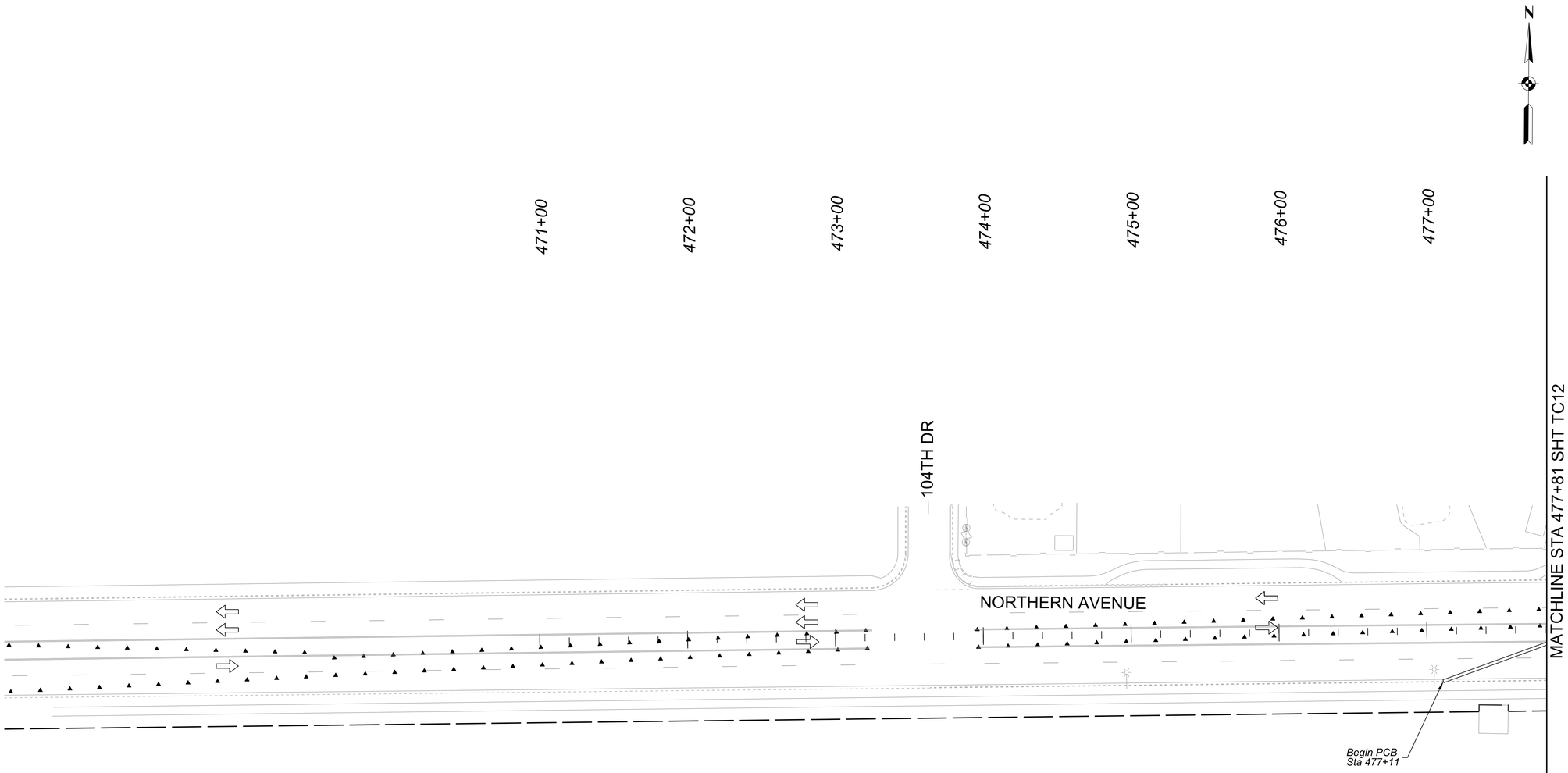

SCALE: Hor: 1"=40'
Vert: NA

40 0 40 80
SCALE IN FEET

NO.	REVISION	BY	DATE
3			
2			
1			

MARICOPA COUNTY

NORTHERN PARKWAY
103RD AVENUE TO 91ST AVENUE - PHASE 1
PROJECT NO. TT0372

	BY	DATE
DESIGNED	A. FREDE	04/2026
DRAWN	I. POPOVICI	04/2026
CHECKED	C. LEMKA	04/2026

Registered Professional Engineer (Civil) CERTIFICATE NO. 79480 ALLISON R. FREDE Date Signed 04/30/26 ARIZONA, U.S.A.

BURGESS & NIPLE
1230 W. WASHINGTON ST. SUITE 511
TEMPE, AZ 85288

Contact Arizona 811 Two Working Days Before You Dig
ARIZONA811 BLUE STAKE, INC.
Call 811 or Click Arizona811.com

TRAFFIC CONTROL PHASE 2
NORTHERN AVENUE

SHEET TC11

TRACS NO.

11:11:09 PM4/30/2026

Projects\221991.00_TT0372\600_CADD\05_Official\Dgn_PHASE_1\Sheets\B&N\TT0372_ST_TrafficControl_PH2_01.dgn

F.H.W.A. REGION	STATE	PROJECT NO.	SHEET NO.	TOTAL SHEETS	RECORD DRAWING
9	AZ	TT0372	92	224	

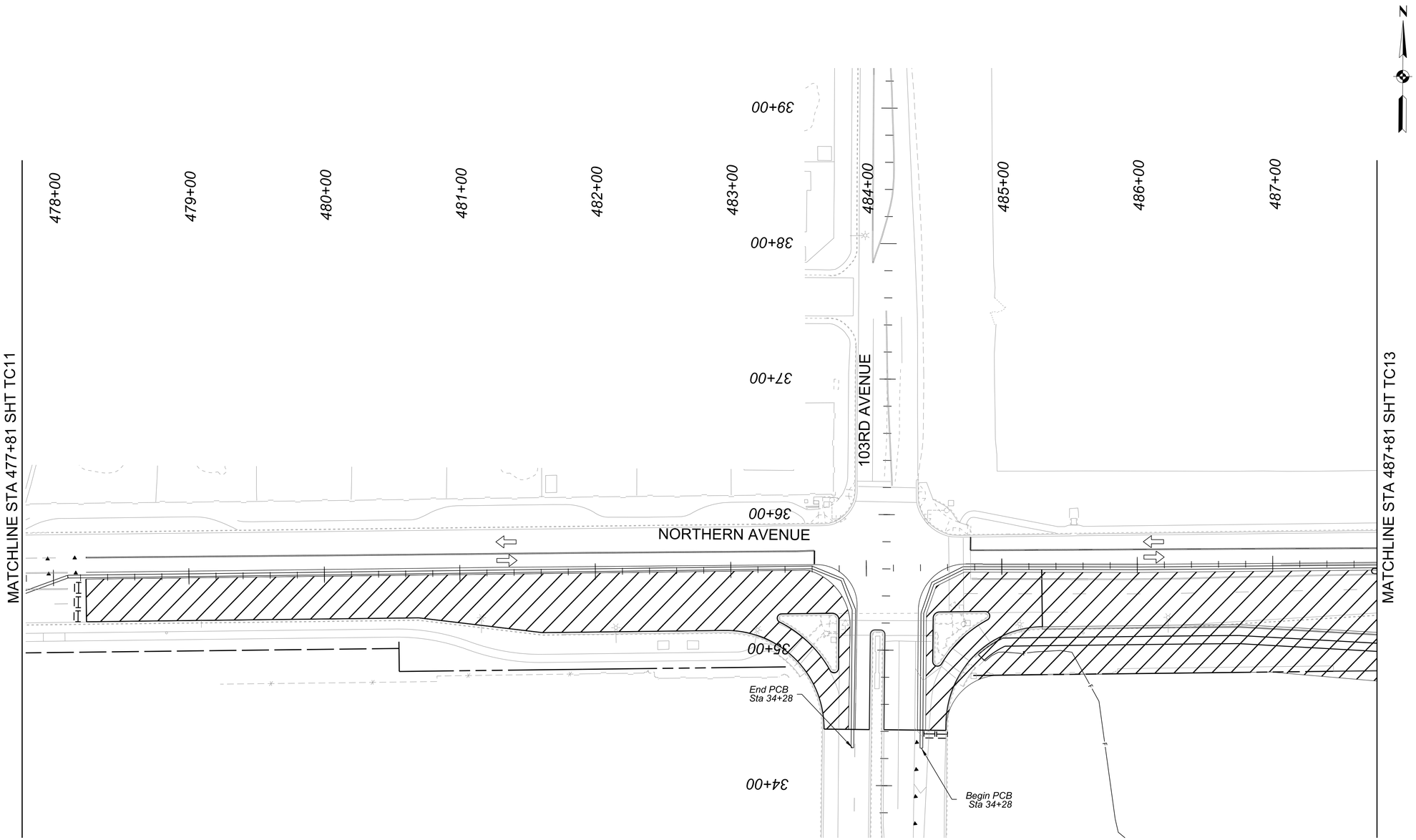

LEGEND

- Temporary Construction
- Permanent Construction
- Direction of Travel
- Type III Barricade
- Traffic Delineator
- Concrete Barrier

SCALE: Hor: 1"=40'
Vert: NA

40 0 40 80
SCALE IN FEET

NO.	REVISION	BY	DATE
3			
2			
1			

MARICOPA COUNTY

NORTHERN PARKWAY
103RD AVENUE TO 91ST AVENUE - PHASE 1
PROJECT NO. TT0372

	BY	DATE
DESIGNED	A. FREDE	04/2026
DRAWN	I. POPOVICI	04/2026
CHECKED	C. LEMKA	04/2026

Registered Professional Engineer (Civil)
CERTIFICATE NO. 79480
ALLISON R. FREDE
Date Signed 04/30/26
ARIZONA, U.S.A.

BURGESS & NIPLE
1230 W. WASHINGTON ST. SUITE 511
TEMPE, AZ 85288

Contact Arizona 811 Two Working Days Before You Dig
ARIZONA811 BLUE STAKE, INC.
Call 811 or Click Arizona811.com

TRAFFIC CONTROL PHASE 2
NORTHERN AVENUE

SHEET TC12

TRACS NO.

11:12:14 PM4/30/2026

Projects\221991.00_TT0372\600_CADD\05_Official\Dgn_PHASE 1\Sheets\B&N\TT0372_ST_TrafficControl_PH2_02.dgn

F.H.W.A. REGION	STATE	PROJECT NO.	SHEET NO.	TOTAL SHEETS	RECORD DRAWING
9	AZ	TT0372	93	224	

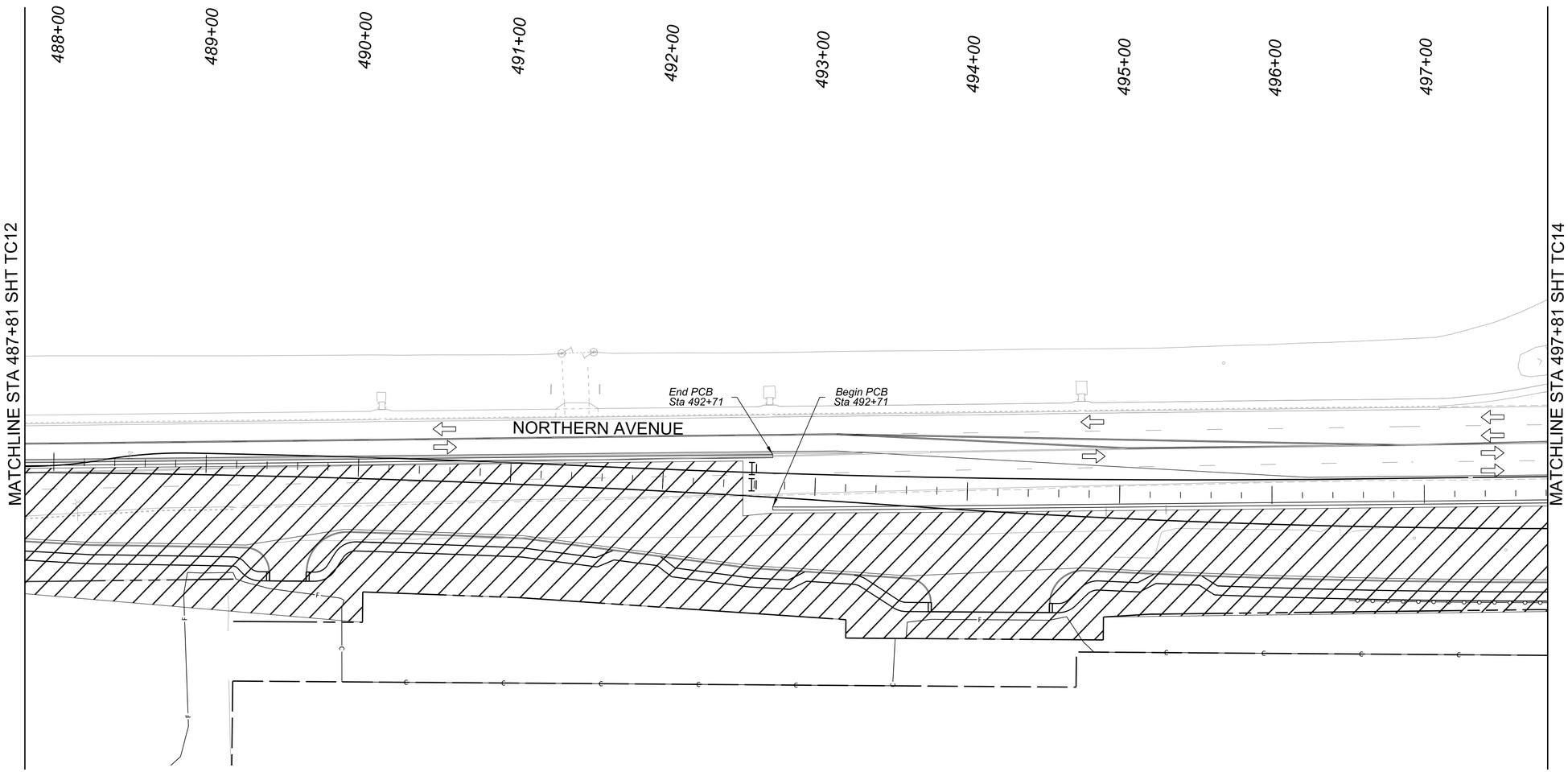

N

LEGEND

- Temporary Construction
- Permanent Construction
- Direction of Travel
- Type III Barricade
- Traffic Delineator
- Concrete Barrier

SCALE: Hor: 1"=40'
Vert: NA

40 0 40 80
SCALE IN FEET

NO.	REVISION	BY	DATE
3			
2			
1			

MARICOPA COUNTY

NORTHERN PARKWAY
103RD AVENUE TO 91ST AVENUE - PHASE 1
PROJECT NO. TT0372

	BY	DATE
DESIGNED	A. FREDE	04/2026
DRAWN	I. POPOVICI	04/2026
CHECKED	C. LEMKA	04/2026

Registered Professional Engineer (Civil)
CERTIFICATE NO. 79480
ALLISON R. FREDE
Date Signed 04/30/26
ARIZONA, U.S.A.

BURGESS & NIPLE
1230 W. WASHINGTON ST. SUITE 511
TEMPE, AZ 85288

Contact Arizona 811 Two Working Days Before You Dig
ARIZONA811 BLUE STAKE, INC.
Call 811 or Click Arizona811.com

TRAFFIC CONTROL PHASE 2
NORTHERN AVENUE

SHEET TC13

TRACS NO.

11:13:04 PM4/30/2026

Projects\221991.00_TT0372\600_CADD\05_Official\Dgn_PHASE 1\Sheets\B&N\TT0372_ST_TrafficControl_PH2_03.dgn

F.H.W.A. REGION	STATE	PROJECT NO.	SHEET NO.	TOTAL SHEETS	RECORD DRAWING
9	AZ	TT0372	94	224	

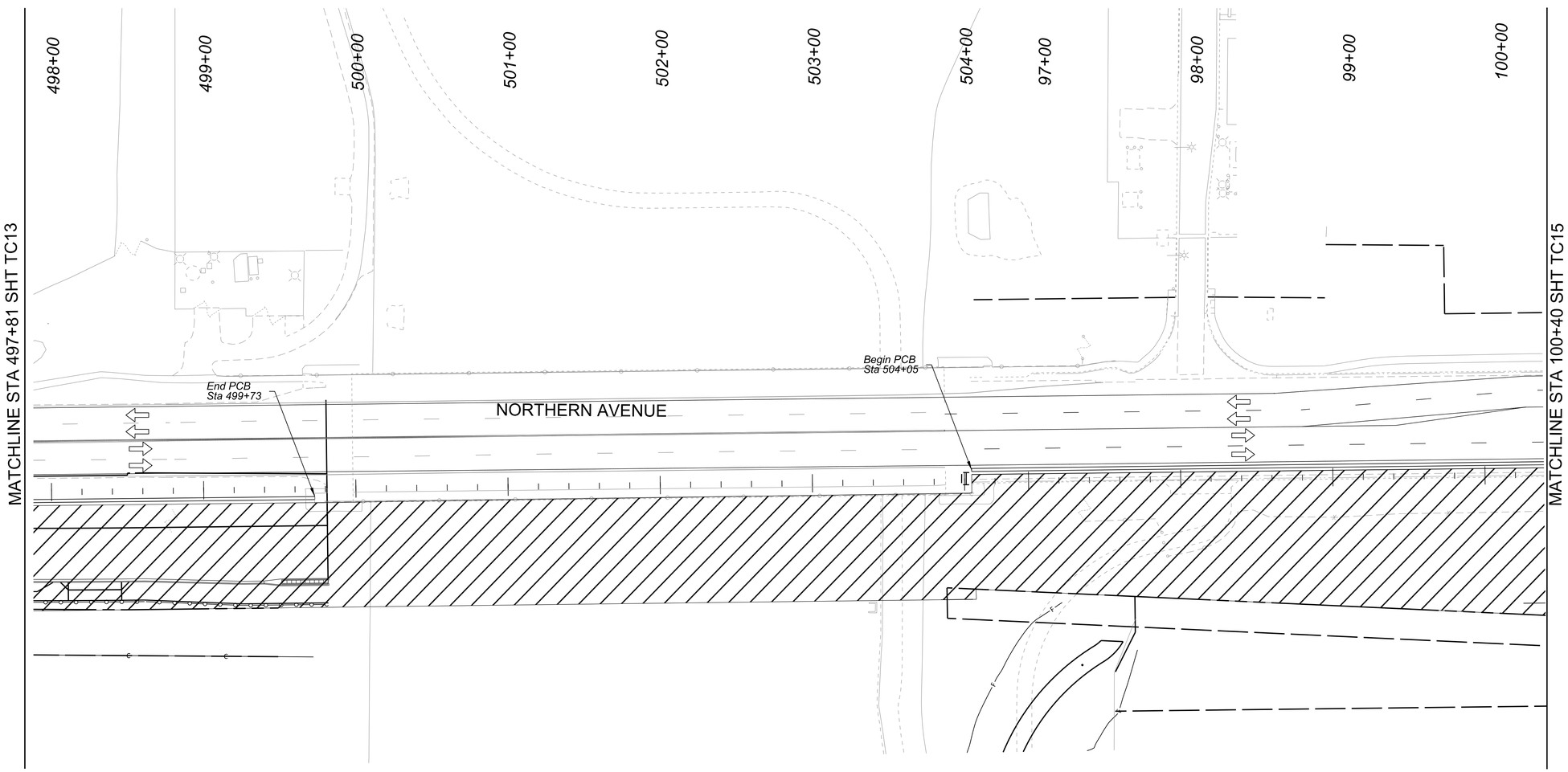

LEGEND

- Temporary Construction
- Permanent Construction
- Direction of Travel
- Type III Barricade
- Traffic Delineator
- Concrete Barrier

N

SCALE: Hor: 1"=40'
Vert: NA

40 0 40 80
SCALE IN FEET

NO.	REVISION	BY	DATE
3			
2			
1			

MARICOPA COUNTY

NORTHERN PARKWAY
103RD AVENUE TO 91ST AVENUE - PHASE 1
PROJECT NO. TT0372

	BY	DATE
DESIGNED	A. FREDE	04/2026
DRAWN	I. POPOVICI	04/2026
CHECKED	C. LEMKA	04/2026

Registered Professional Engineer (Civil) CERTIFICATE NO. 79488 ALLISON R. FREDE Date Signed 04/30/26 ARIZONA, U.S.A.

BURGESS & NIPLE
1230 W. WASHINGTON ST. SUITE 511
TEMPE, AZ 85288

Contact Arizona 811 Two Working Days Before You Dig
ARIZONA811 BLUE STAKE, INC.
Call 811 or Click Arizona811.com

TRAFFIC CONTROL PHASE 2
NORTHERN AVENUE

SHEET TC14

TRACS NO.

11:12:47 PM4/30/2026

Projects\221991.00_TT0372\600_CADD\05_Official\Dgn_PHASE_1\Sheets\B&N\TT0372_ST_TrafficControl_PH2_04.dgn

F.H.W.A. REGION	STATE	PROJECT NO.	SHEET NO.	TOTAL SHEETS	RECORD DRAWING
9	AZ	TT0372	95	224	

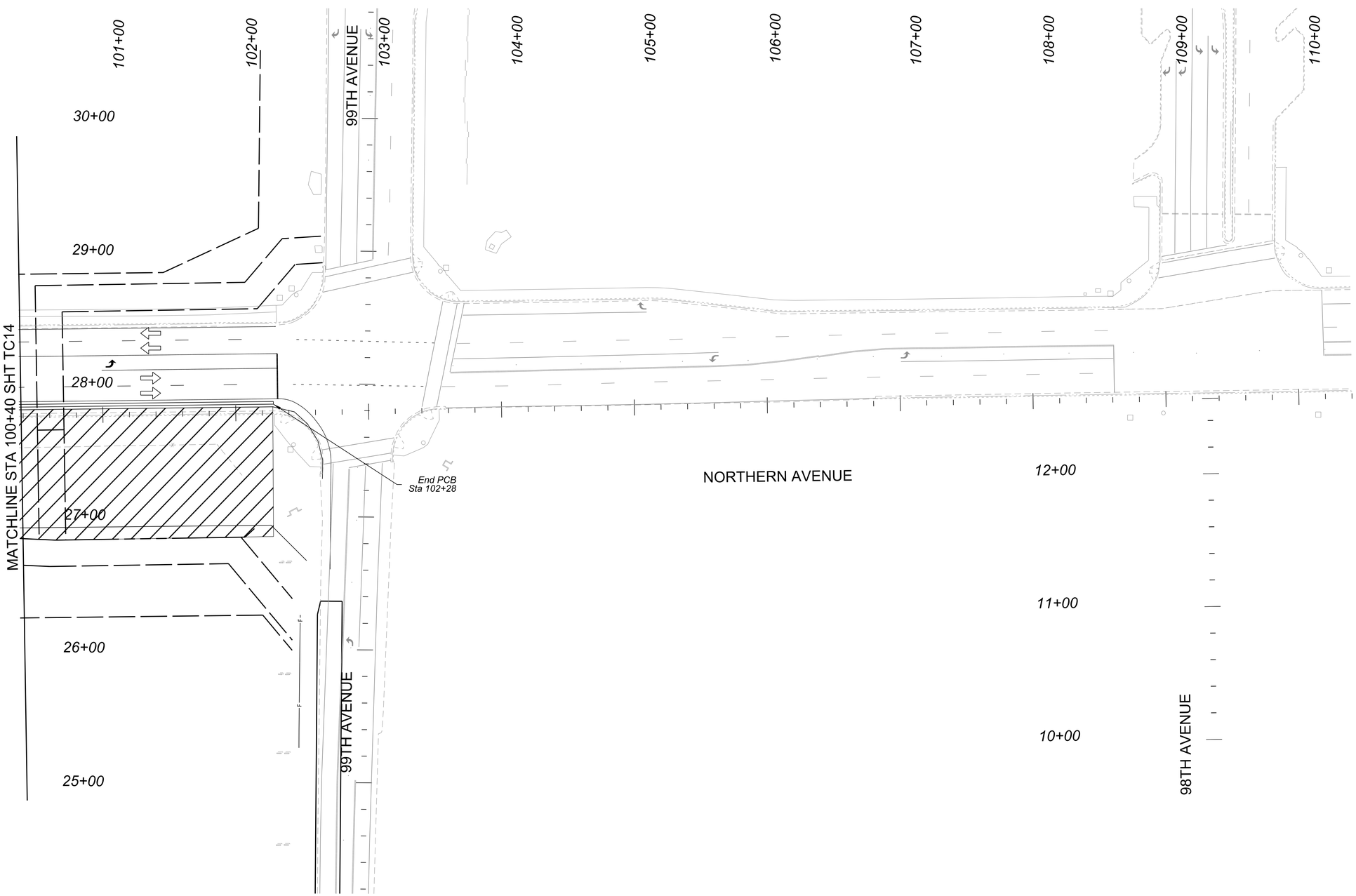

LEGEND

- Temporary Construction
- Permanent Construction
- Direction of Travel
- Type III Barricade
- Traffic Delineator
- Concrete Barrier

SCALE: Hor: 1"=40'
Vert: NA

40 0 40 80
SCALE IN FEET

NO.	REVISION	BY	DATE
3			
2			
1			

MARICOPA COUNTY

NORTHERN PARKWAY
103RD AVENUE TO 91ST AVENUE - PHASE 1
PROJECT NO. TT0372

	BY	DATE
DESIGNED	A. FREDE	04/2026
DRAWN	I. POPOVICI	04/2026
CHECKED	C. LEMKA	04/2026

Registered Professional Engineer (Civil) CERTIFICATE NO. 79480 ALLISON R. FREDE Date Signed 04/30/26 ARIZONA U.S.A.

BURGESS & NIPLE
1230 W. WASHINGTON ST. SUITE 511
TEMPE, AZ 85288

Contact Arizona 811 Two Working Days Before You Dig
ARIZONA811 BLUE STAKE, INC.
Call 811 or Click Arizona811.com

TRAFFIC CONTROL PHASE 2
NORTHERN AVENUE

SHEET TC15

TRACS NO.

Projects\221991.00_TT0372\600_CADD\05_Official\Dgn_PHASE 1\Sheets\B&N\TT0372_ST_TrafficControl_PH2_05.dgn

11:13:21 PM\4/30/2026

F.H.W.A. REGION	STATE	PROJECT NO.	SHEET NO.	TOTAL SHEETS	RECORD DRAWING
9	AZ	TT0372	96	224	

LEGEND

- Temporary Construction
- Permanent Construction
- Direction of Travel
- Type III Barricade
- Traffic Delineator
- Concrete Barrier

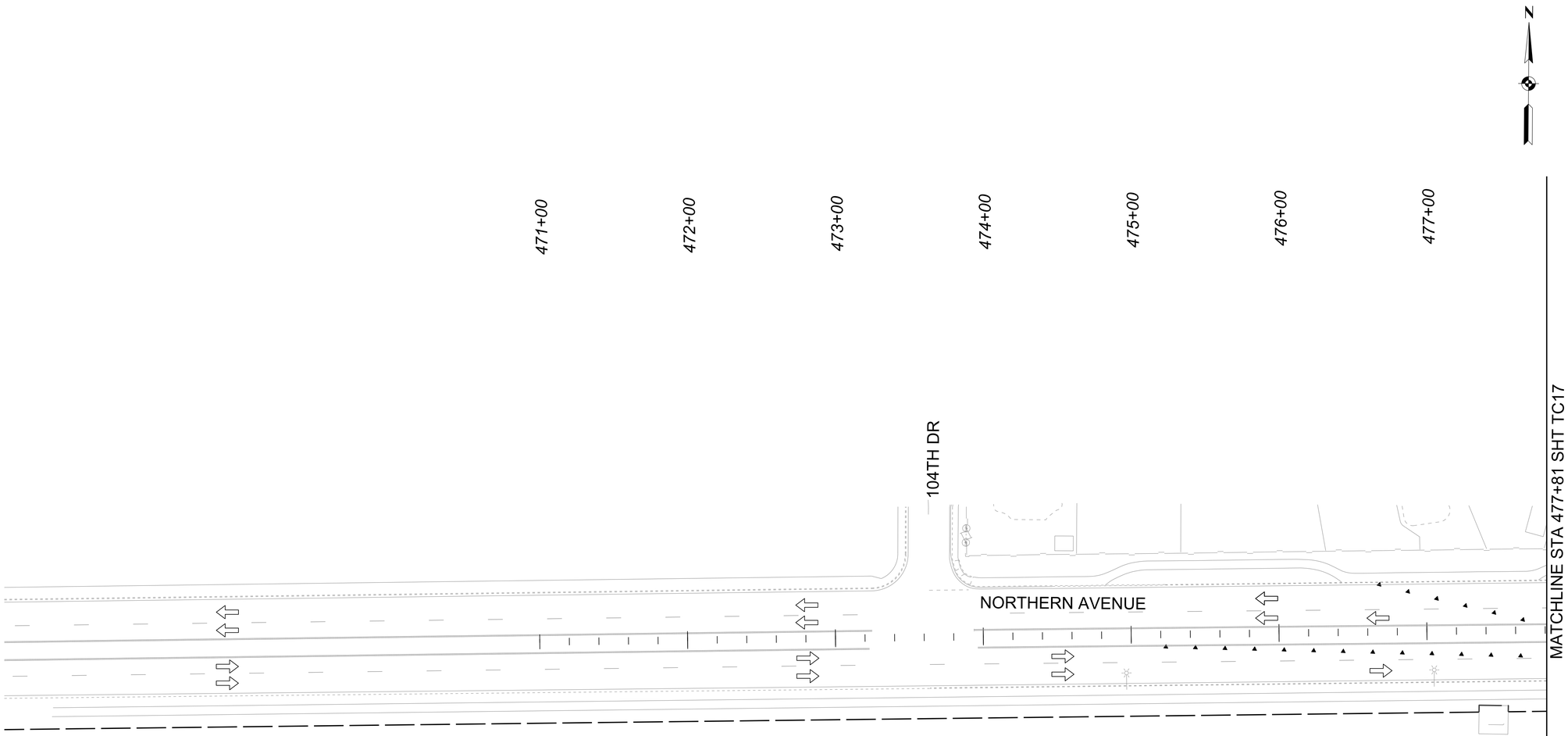

SCALE: Hor: 1"=40'
Vert: NA

40 0 40 80
SCALE IN FEET

NO.	REVISION	BY	DATE
3			
2			
1			

MARICOPA COUNTY

NORTHERN PARKWAY
103RD AVENUE TO 91ST AVENUE - PHASE 1
PROJECT NO. TT0372

	BY	DATE
DESIGNED	A. FREDE	04/2026
DRAWN	I. POPOVICI	04/2026
CHECKED	C. LEMKA	04/2026

Registered Professional Engineer (Civil) CERTIFICATE NO. 79480 ALLISON R. FREDE Date Signed 04/30/26 ARIZONA, U.S.A.

BURGESS & NIPLE
1230 W. WASHINGTON ST. SUITE 511
TEMPE, AZ 85288

Contact Arizona 811 Two Working Days Before You Dig
ARIZONA811 BLUE STAKE, INC.
Call 811 or Click Arizona811.com

TRAFFIC CONTROL PHASE 3A
NORTHERN AVENUE

SHEET TC16

TRACS NO.

11:11:56 PM4/30/2026

Projects\221991.00_TT0372\600_CADD\05_Official\Dgn_PHASE_1\Sheets\B&N\TT0372_ST_TrafficControl_PH3A_01.dgn

F.H.W.A. REGION	STATE	PROJECT NO.	SHEET NO.	TOTAL SHEETS	RECORD DRAWING
9	AZ	TT0372	97	224	

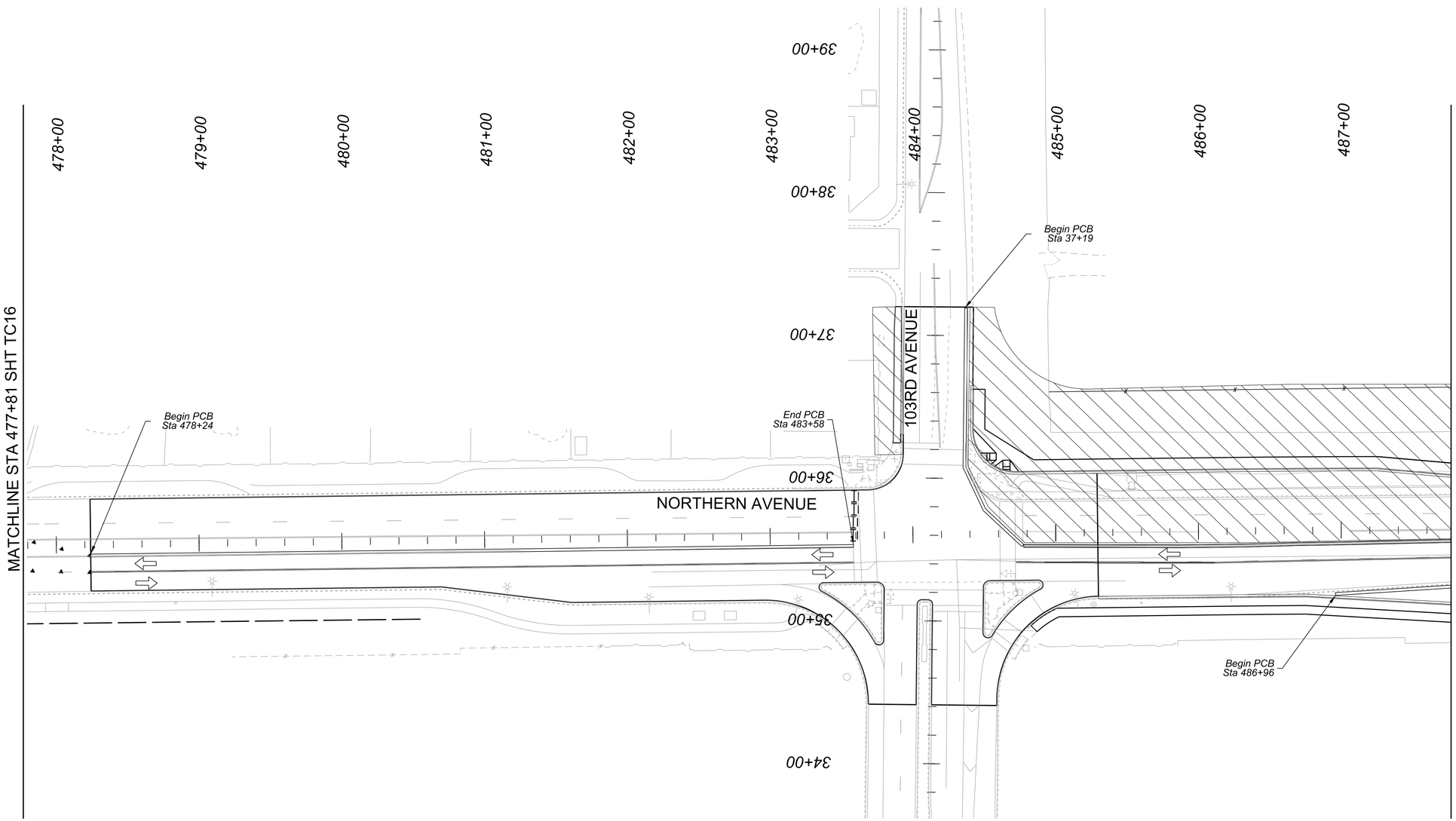

LEGEND

- Temporary Construction
- Permanent Construction
- Direction of Travel
- Type III Barricade
- Traffic Delineator
- Concrete Barrier

SCALE: Hor: 1"=40'
Vert: NA

40 0 40 80
SCALE IN FEET

NO.	REVISION	BY	DATE
3			
2			
1			

MARICOPA COUNTY

NORTHERN PARKWAY
103RD AVENUE TO 91ST AVENUE - PHASE 1
PROJECT NO. TT0372

	BY	DATE
DESIGNED	A. FREDE	04/2026
DRAWN	I. POPOVICI	04/2026
CHECKED	C. LEMKA	04/2026

Registered Professional Engineer (Civil)
CERTIFICATE NO. 79480
ALLISON R. FREDE
Date Signed 04/30/26
ARIZONA, U.S.A.

BURGESS & NIPLE
1230 W. WASHINGTON ST. SUITE 511
TEMPE, AZ 85288

TRAFFIC CONTROL PHASE 3A
NORTHERN AVENUE

SHEET
TC17

TRACS NO.

Contact Arizona 811 Two Working Days Before You Dig
ARIZONA811 BLUE STAKE, INC.
Call 811 or Click Arizona811.com

Projects\221991.00_TT0372\600_CADD\05_Official\Dgn_PHASE_1\Sheets\B&N\TT0372_ST_TrafficControl_PH3A_02.dgn
11:13:37 PM4/30/2026

F.H.W.A. REGION	STATE	PROJECT NO.	SHEET NO.	TOTAL SHEETS	RECORD DRAWING
9	AZ	TT0372	98	224	

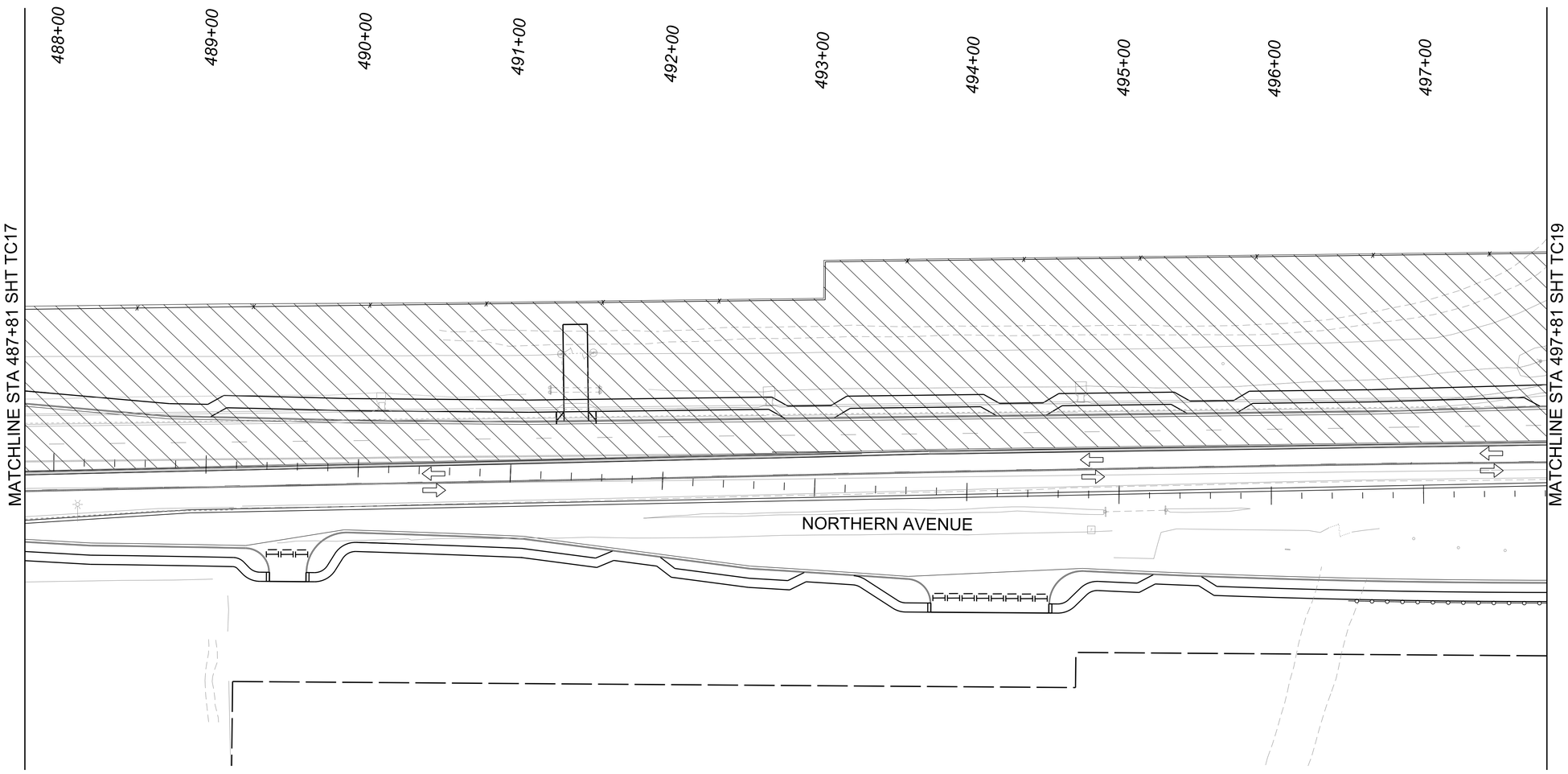

N

LEGEND

- Temporary Construction
- Permanent Construction
- Direction of Travel
- Type III Barricade
- Traffic Delineator
- Concrete Barrier

SCALE: Hor: 1"=40'
Vert: NA

40 0 40 80
SCALE IN FEET

NO.	REVISION	BY	DATE
3			
2			
1			

MARICOPA COUNTY

NORTHERN PARKWAY
103RD AVENUE TO 91ST AVENUE - PHASE 1
PROJECT NO. TT0372

	BY	DATE
DESIGNED	A. FREDE	04/2026
DRAWN	I. POPOVICI	04/2026
CHECKED	C. LEMKA	04/2026

Registered Professional Engineer (Civil)
CERTIFICATE NO. 79488
ALLISON R. FREDE
Date Signed 04/30/26
ARIZONA, U.S.A.

BURGESS & NIPLE
1230 W. WASHINGTON ST. SUITE 511
TEMPE, AZ 85288

TRAFFIC CONTROL PHASE 3A
NORTHERN AVENUE

SHEET TC18

TRACS NO.

Contact Arizona 811 Two Working Days Before You Dig
ARIZONA811 BLUE STAKE, INC.
Call 811 or Click Arizona811.com

11:12:31 PM4/30/2026

Projects\221991.00_TT0372\600_CADD\05_Official\Dgn_PHASE 1\Sheets\B&N\TT0372_ST_TrafficControl_PH3A_03.dgn

F.H.W.A. REGION	STATE	PROJECT NO.	SHEET NO.	TOTAL SHEETS	RECORD DRAWING
9	AZ	TT0372	99	224	

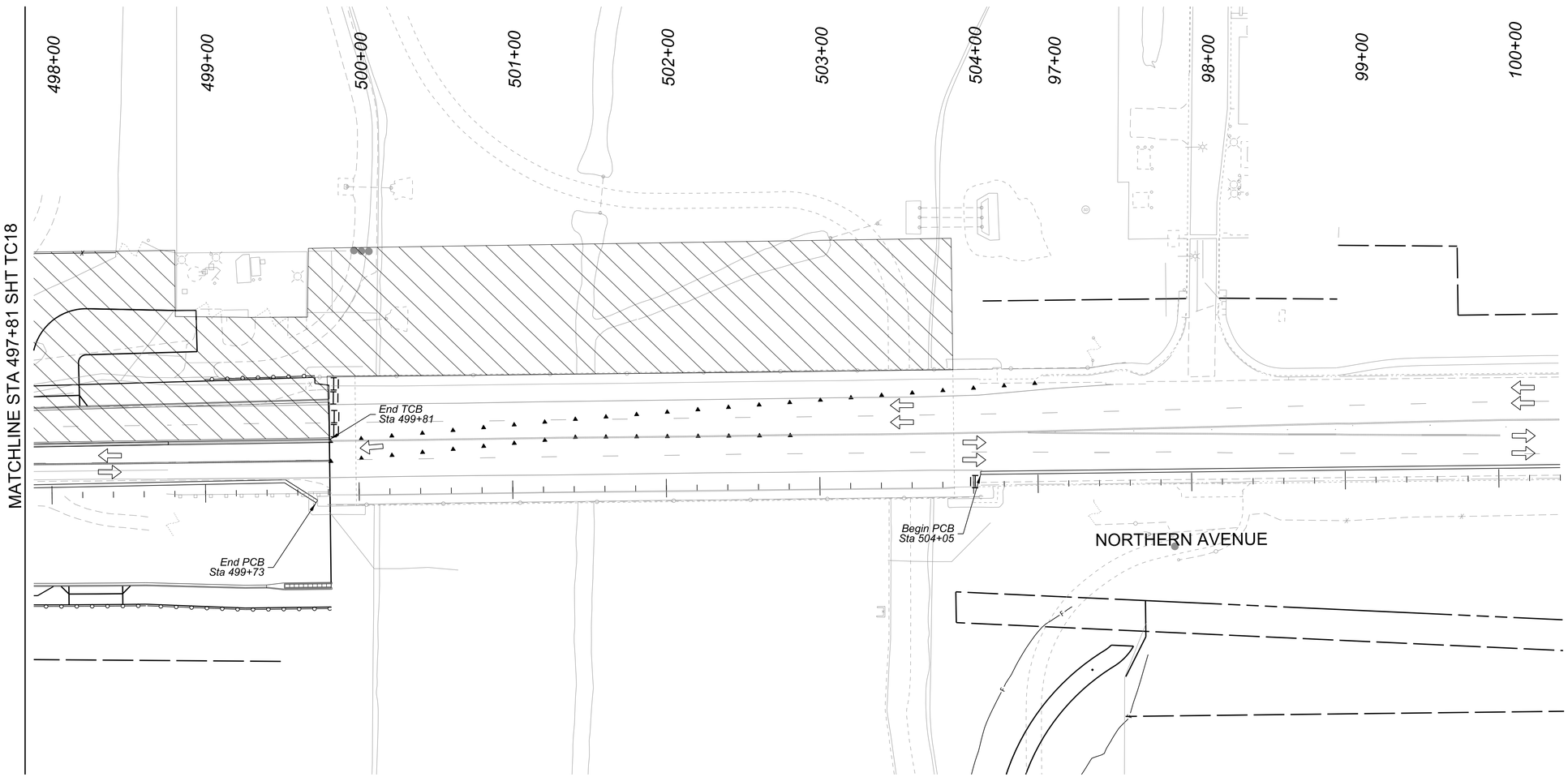

N

LEGEND

- Temporary Construction
- Permanent Construction
- Direction of Travel
- Type III Barricade
- Traffic Delineator
- Concrete Barrier

SCALE: Hor: 1"=40'
Vert: NA

40 0 40 80
SCALE IN FEET

NO.	REVISION	BY	DATE
3			
2			
1			

MARICOPA COUNTY

NORTHERN PARKWAY
103RD AVENUE TO 91ST AVENUE - PHASE 1
PROJECT NO. TT0372

	BY	DATE
DESIGNED	A. FREDE	04/2026
DRAWN	I. POPOVICI	04/2026
CHECKED	C. LEMKA	04/2026

Registered Professional Engineer (Civil) CERTIFICATE NO. 79480 ALLISON R. FREDE Date Signed 04/30/26 ARIZONA, U.S.A.

BURGESS & NIPLE
1230 W. WASHINGTON ST. SUITE 511
TEMPE, AZ 85288

Contact Arizona 811 Two Working Days Before You Dig
ARIZONA811 BLUE STAKE, INC.
Call 811 or Click Arizona811.com

TRAFFIC CONTROL PHASE 3A
NORTHERN AVENUE

SHEET TC19

TRACS NO.

Projects\221991.00_TT0372\600_CADD\05_Official\Dgn_PHASE 1\Sheets\B&N\TT0372_ST_TrafficControl_PH3A_04.dgn 11:15:03 PM4/30/2026

F.H.W.A. REGION	STATE	PROJECT NO.	SHEET NO.	TOTAL SHEETS	RECORD DRAWING
9	AZ	TT0372	100	224	

LEGEND

- Temporary Construction
- Permanent Construction
- Direction of Travel
- Type III Barricade
- Traffic Delineator
- Concrete Barrier

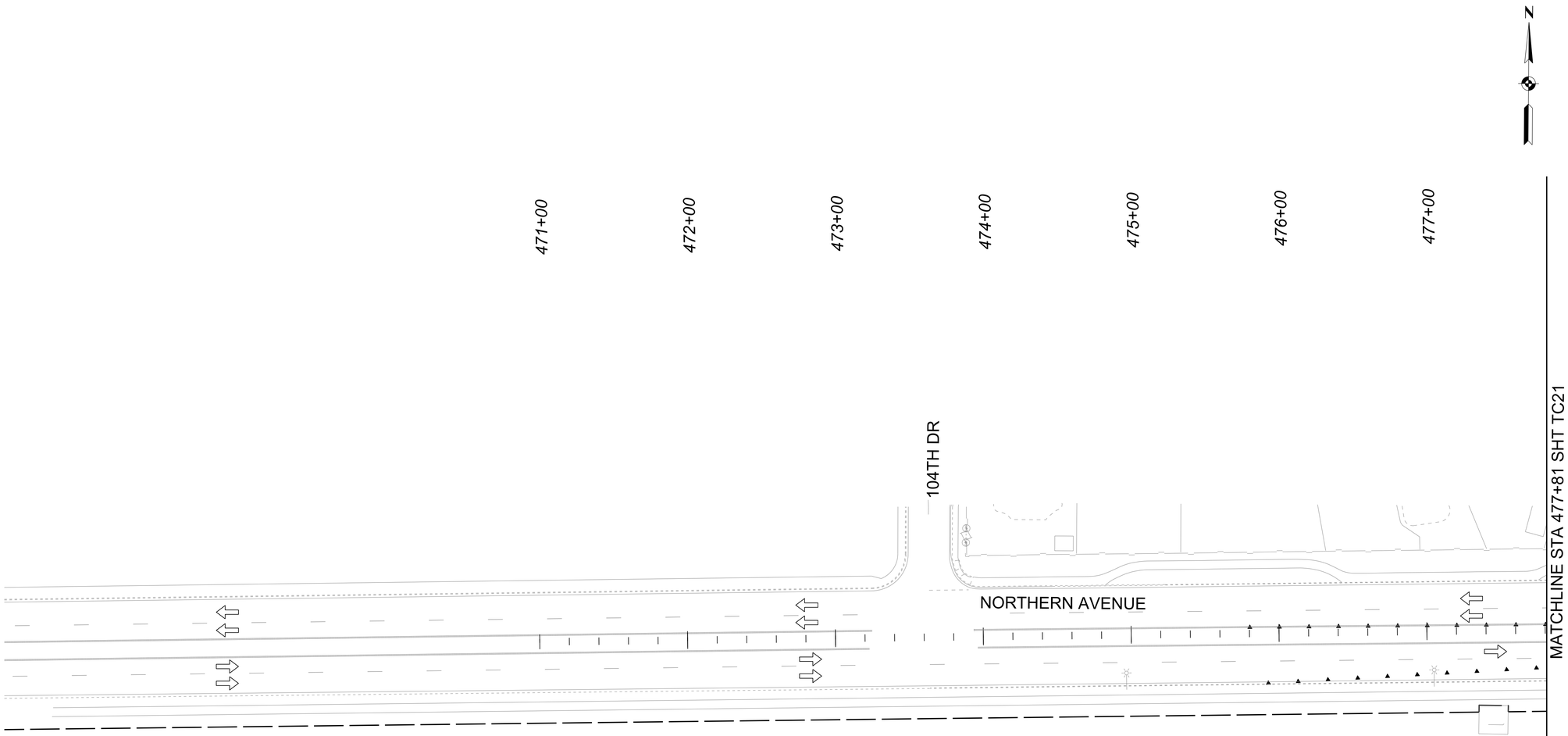

SCALE: Hor: 1"=40'
Vert: NA

40 0 40 80
SCALE IN FEET

NO.	REVISION	BY	DATE
3			
2			
1			

MARICOPA COUNTY

NORTHERN PARKWAY
103RD AVENUE TO 91ST AVENUE - PHASE 1
PROJECT NO. TT0372

	BY	DATE
DESIGNED	A. FREDE	04/2026
DRAWN	I. POPOVICI	04/2026
CHECKED	C. LEMKA	04/2026

Registered Professional Engineer (Civil) CERTIFICATE NO. 79480 ALLISON R. FREDE Date Signed 04/30/26 ARIZONA, U.S.A.

BURGESS & NIPLE
1230 W. WASHINGTON ST. SUITE 511
TEMPE, AZ 85288

Contact Arizona 811 Two Working Days Before You Dig
ARIZONA811 BLUE STAKE, INC.
Call 811 or Click Arizona811.com

TRAFFIC CONTROL PHASE 3B
NORTHERN AVENUE

SHEET TC20

TRACS NO.

11:15:45 PM4/30/2026

Projects\221991.00_TT0372\600_CADD\05_Official\Dgn_PHASE_1\Sheets\B&N\TT0372_ST_TrafficControl_PH3B_01.dgn

F.H.W.A. REGION	STATE	PROJECT NO.	SHEET NO.	TOTAL SHEETS	RECORD DRAWING
9	AZ	TT0372	101	224	

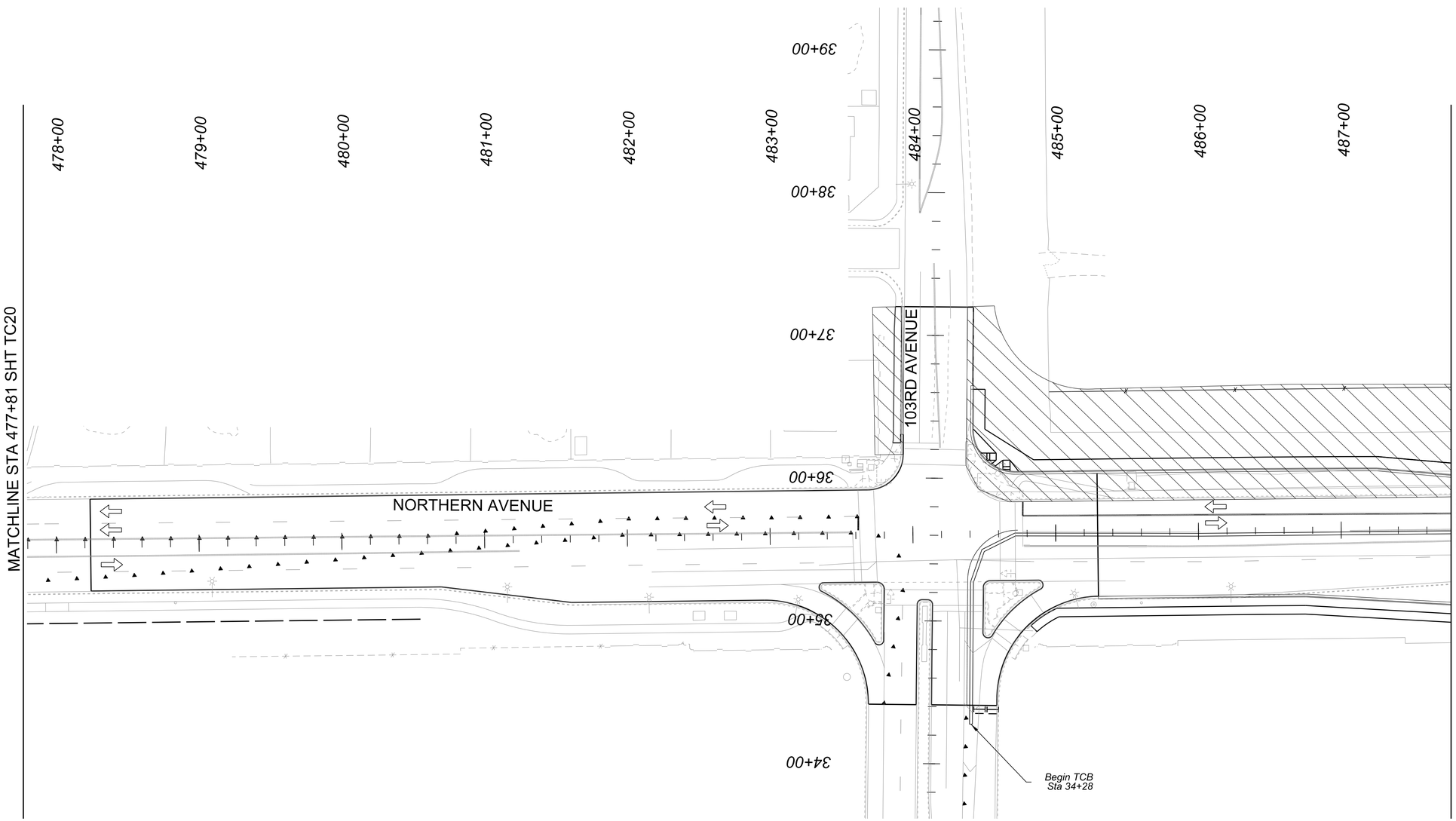

LEGEND

- Temporary Construction
- Permanent Construction
- Direction of Travel
- Type III Barricade
- Traffic Delineator
- Concrete Barrier

SCALE: Hor: 1"=40'
Vert: NA

40 0 40 80
SCALE IN FEET

NO.	REVISION	BY	DATE
3			
2			
1			

MARICOPA COUNTY

NORTHERN PARKWAY
103RD AVENUE TO 91ST AVENUE - PHASE 1
PROJECT NO. TT0372

	BY	DATE
DESIGNED	A. FREDE	04/2026
DRAWN	I. POPOVICI	04/2026
CHECKED	C. LEMKA	04/2026

Registered Professional Engineer (Civil)
CERTIFICATE NO. 79480
ALLISON R. FREDE
Date Signed 04/30/26
ARIZONA, U.S.A.

BURGESS & NIPLE
1230 W. WASHINGTON ST. SUITE 511
TEMPE, AZ 85288

Contact Arizona 811 Two Working Days Before You Dig
ARIZONA811 BLUE STAKE, INC.
Call 811 or Click Arizona811.com

TRAFFIC CONTROL PHASE 3B
NORTHERN AVENUE

SHEET TC21

TRACS NO.

11:13:54 PM4/30/2026

Projects\221991.00_TT0372\600_CADD\05_Official\Dgn_PHASE 1\Sheets\B&N\TT0372_ST_TrafficControl_PH3B_02.dgn

F.H.W.A. REGION	STATE	PROJECT NO.	SHEET NO.	TOTAL SHEETS	RECORD DRAWING
9	AZ	TT0372	102	224	

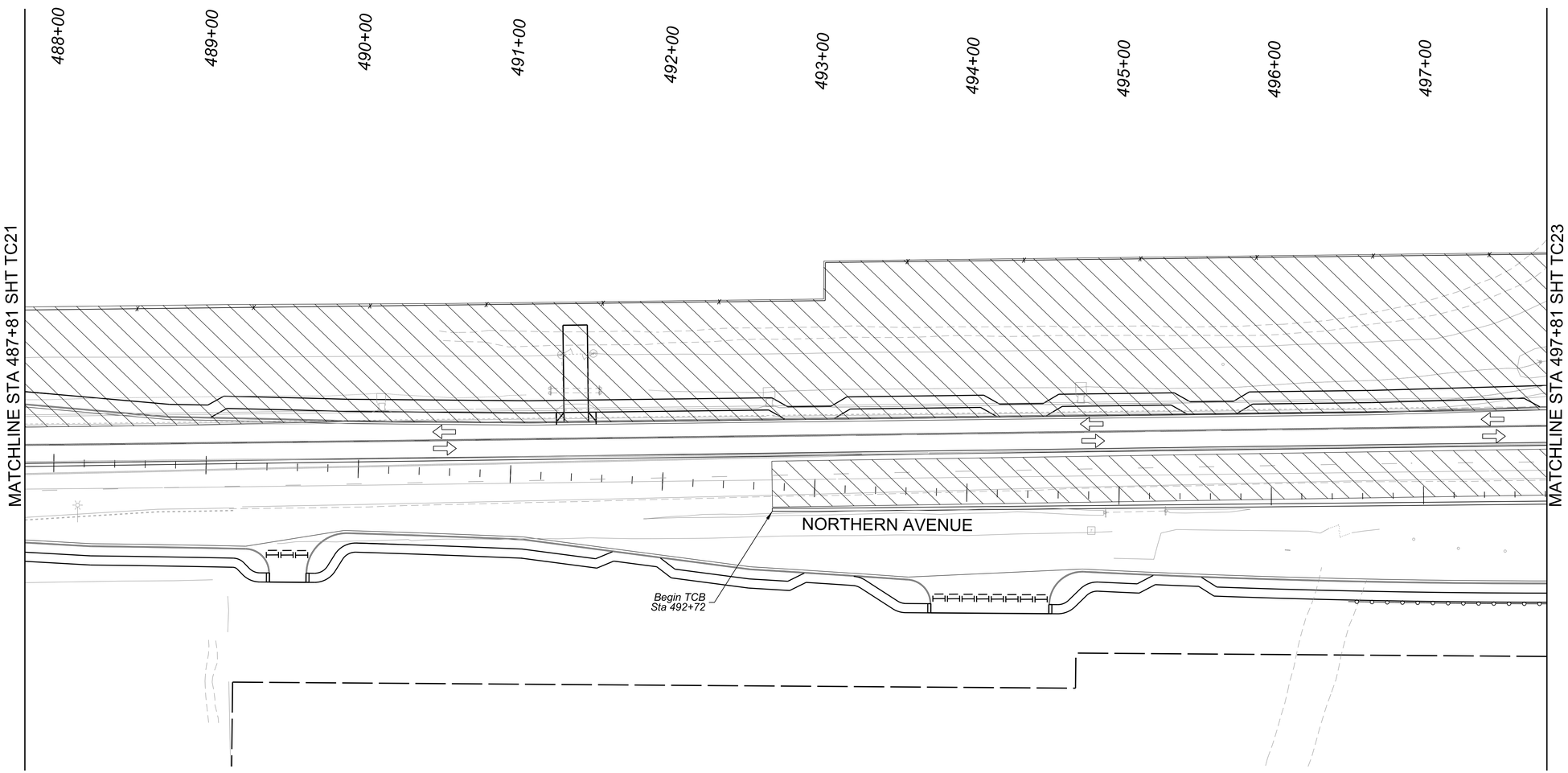

N

LEGEND

- Temporary Construction
- Permanent Construction
- Direction of Travel
- Type III Barricade
- Traffic Delineator
- Concrete Barrier

SCALE: Hor: 1"=40'
Vert: NA

40 0 40 80

SCALE IN FEET

NO.	REVISION	BY	DATE
3			
2			
1			

MARICOPA COUNTY

NORTHERN PARKWAY
103RD AVENUE TO 91ST AVENUE - PHASE 1
PROJECT NO. TT0372

	BY	DATE
DESIGNED	A. FREDE	04/2026
DRAWN	I. POPOVICI	04/2026
CHECKED	C. LEMKA	04/2026

Registered Professional Engineer (Civil) CERTIFICATE NO. 79480 ALLISON R. FREDE Date Signed 04/30/26 ARIZONA, U.S.A.

BURGESS & NIPLE
1230 W. WASHINGTON ST. SUITE 511
TEMPE, AZ 85288

Contact Arizona 811 Two Working Days Before You Dig
ARIZONA811 BLUE STAKE, INC.
Call 811 or Click Arizona811.com

TRAFFIC CONTROL PHASE 3B
NORTHERN AVENUE

SHEET TC22

TRACS NO.

11:14:45 PM4/30/2026

Projects\221991.00_TT0372\600_CADD\05_Official\Dgn_PHASE 1\Sheets\B&N\TT0372_ST_TrafficControl_PH3B_03.dgn

F.H.W.A. REGION	STATE	PROJECT NO.	SHEET NO.	TOTAL SHEETS	RECORD DRAWING
9	AZ	TT0372	103	224	

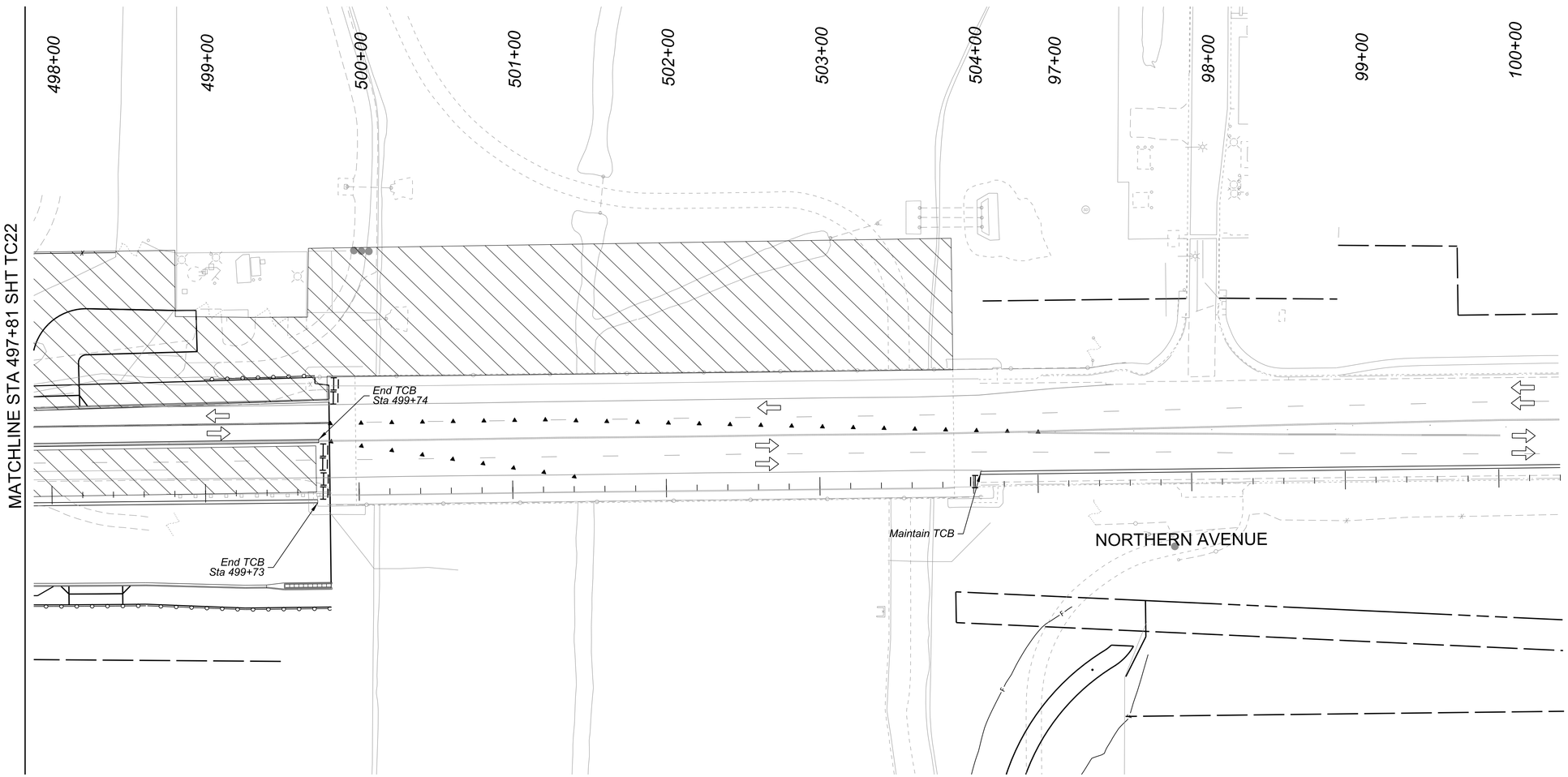

N

LEGEND

- Temporary Construction
- Permanent Construction
- Direction of Travel
- Type III Barricade
- Traffic Delineator
- Concrete Barrier

SCALE: Hor: 1"=40'
Vert: NA

40 0 40 80
SCALE IN FEET

NO.	REVISION	BY	DATE
3			
2			
1			

MARICOPA COUNTY

NORTHERN PARKWAY
103RD AVENUE TO 91ST AVENUE - PHASE 1
PROJECT NO. TT0372

	BY	DATE
DESIGNED	A. FREDE	04/2026
DRAWN	I. POPOVICI	04/2026
CHECKED	C. LEMKA	04/2026

Registered Professional Engineer (Civil) CERTIFICATE NO. 79488 ALLISON R. FREDE Date Signed 04/30/26 ARIZONA, U.S.A.

BURGESS & NIPLE
1230 W. WASHINGTON ST. SUITE 511
TEMPE, AZ 85288

Contact Arizona 811 Two Working Days Before You Dig
ARIZONA811 BLUE STAKE, INC.
Call 811 or Click Arizona811.com

TRAFFIC CONTROL PHASE 3B
NORTHERN AVENUE

SHEET TC23

TRACS NO.

11:16:02 PM4/30/2026

Projects\221991.00_TT0372\600_CADD\05_Official\Dgn_PHASE 1\Sheets\B&N\TT0372_ST_TrafficControl_PH3B_04.dgn

F.H.W.A. REGION	STATE	PROJECT NO.	SHEET NO.	TOTAL SHEETS	RECORD DRAWING
9	AZ	TT0372	104	224	

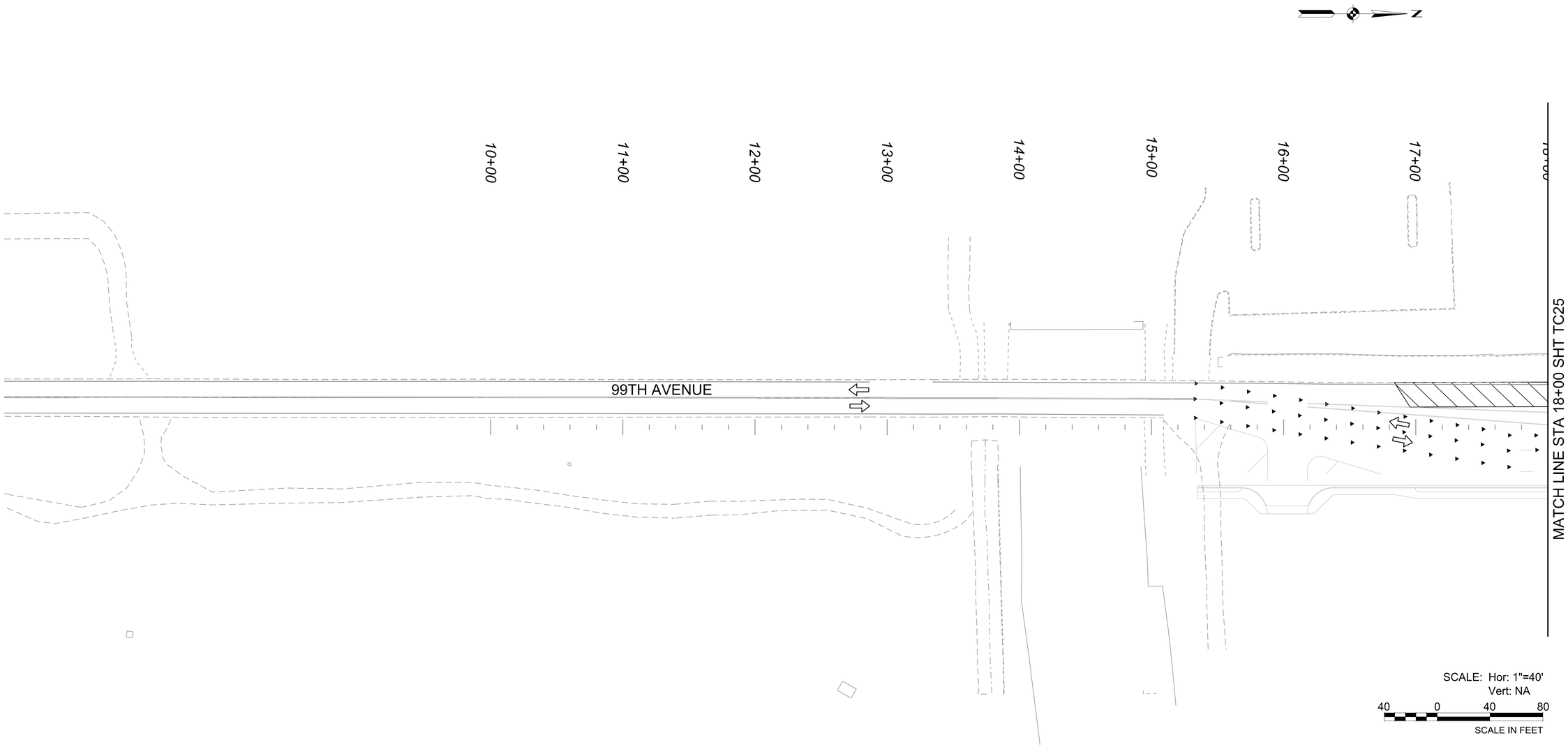

SCALE: Hor: 1"=40'
Vert: NA

40 0 40 80
SCALE IN FEET

LEGEND

- Temporary Construction
- Permanent Construction
- Direction of Travel
- Type III Barricade
- Traffic Delineator
- Concrete Barrier

Contact Arizona 811 Two Working Days Before You Dig
ARIZONA811 BLUE STAKE, INC.
Call 811 or Click Arizona811.com

NO.	REVISION	BY	DATE
3			
2			
1			

MARICOPA COUNTY

NORTHERN PARKWAY
103RD AVENUE TO 91ST AVENUE - PHASE 1
PROJECT NO. TT0372

	BY	DATE
DESIGNED	A. FREDE	04/2026
DRAWN	I. POPOVICI	04/2026
CHECKED	C. LEMKA	04/2026

Registered Professional Engineer (Civil) CERTIFICATE NO. 79488 ALLISON R. FREDE Date Signed 04/30/26 ARIZONA, U.S.A.

BURGESS & NIPLE
1230 W. WASHINGTON ST. SUITE 511
TEMPE, AZ 85288

TRAFFIC CONTROL PHASE 4
99TH AVENUE

SHEET TC24

TRACS NO.

4:34:32 PM 5/7/2026

Projects\221991.00_TT0372\600_CADD\05_Official\Dgn_PHASE 1\Sheets\B&N\TT0372_ST_TrafficControl_PH4_01.dgn

F.H.W.A. REGION	STATE	PROJECT NO.	SHEET NO.	TOTAL SHEETS	RECORD DRAWING
9	AZ	TT0372	105	224	

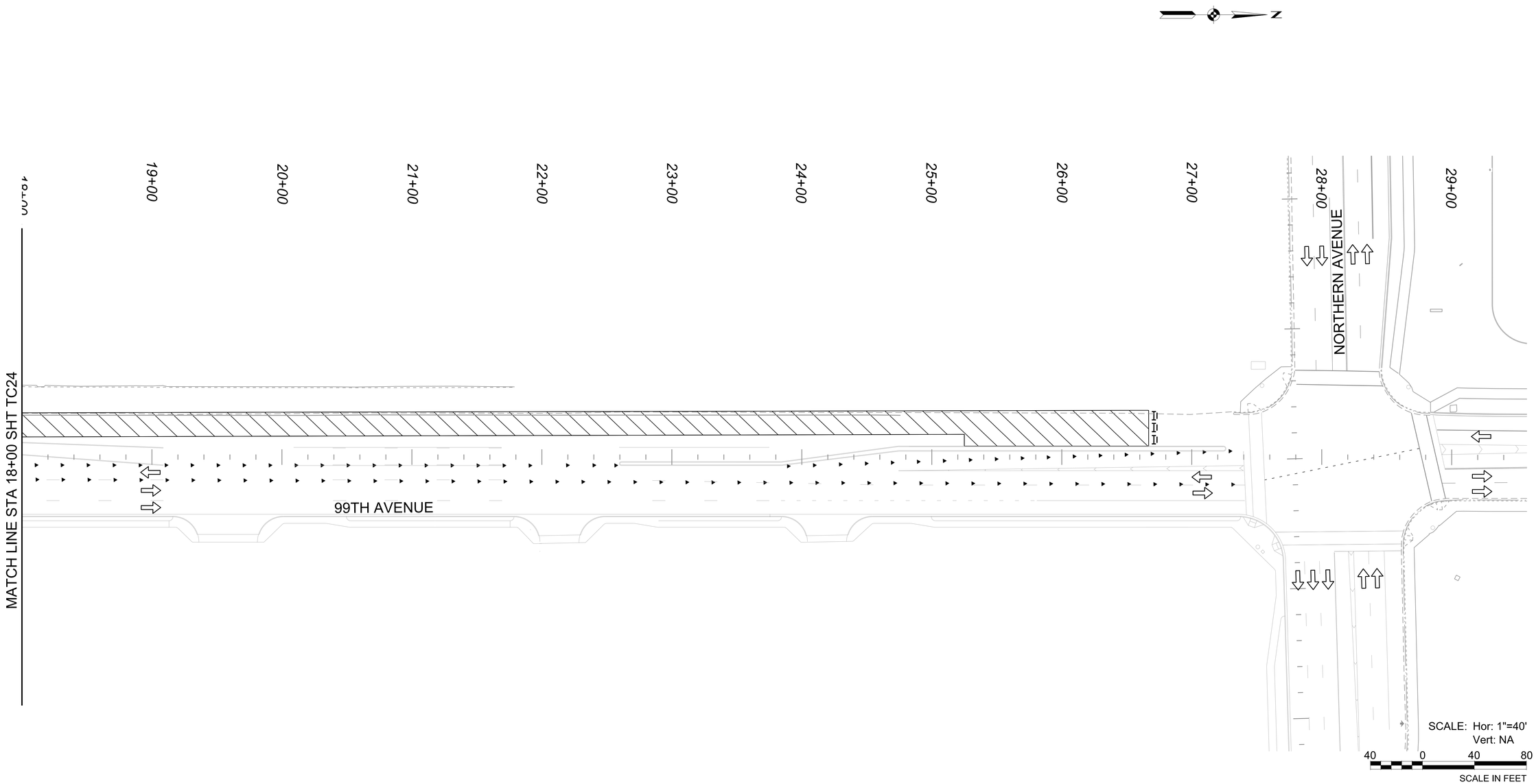

LEGEND

- Temporary Construction
- Permanent Construction
- Direction of Travel
- Type III Barricade
- Traffic Delineator
- Concrete Barrier

Contact Arizona 811 Two Working Days Before You Dig
Call 811 or Click Arizona811.com

NO.	REVISION	BY	DATE
1			
2			
3			
4			

MARICOPA COUNTY

NORTHERN PARKWAY
103RD AVENUE TO 91ST AVENUE - PHASE 1
PROJECT NO. TT0372

	BY	DATE
DESIGNED	A. FREDE	04/2026
DRAWN	I. POPOVICI	04/2026
CHECKED	C. LEMKA	04/2026

Registered Professional Engineer (Civil) CERTIFICATE NO. 79488 ALLISON R. FREDE Date Signed 04/30/26 ARIZONA U.S.A.

BURGESS & NIPLE
1230 W. WASHINGTON ST. SUITE 511
TEMPE, AZ 85288

TRAFFIC CONTROL PHASE 4
99TH AVENUE

SHEET TC25

TRACS NO.

4:34:18 PM 5/7/2026

Projects\221991.00_TT0372\600_CADD\05_Official\Dgn_PHASE 1\Sheets\B&N\TT0372_ST_TrafficControl_PH4_02.dgn

F.H.W.A. REGION	STATE	PROJECT NO.	SHEET NO.	TOTAL SHEETS	RECORD DRAWING
9	AZ	TT0372	106	224	

MARICOPA COUNTY

SIGNING AND PAVEMENT MARKING PLANS FOR NORTHERN PARKWAY - 103RD AVENUE TO 91ST AVENUE - PHASE 1

PROJECT NO. TT0372

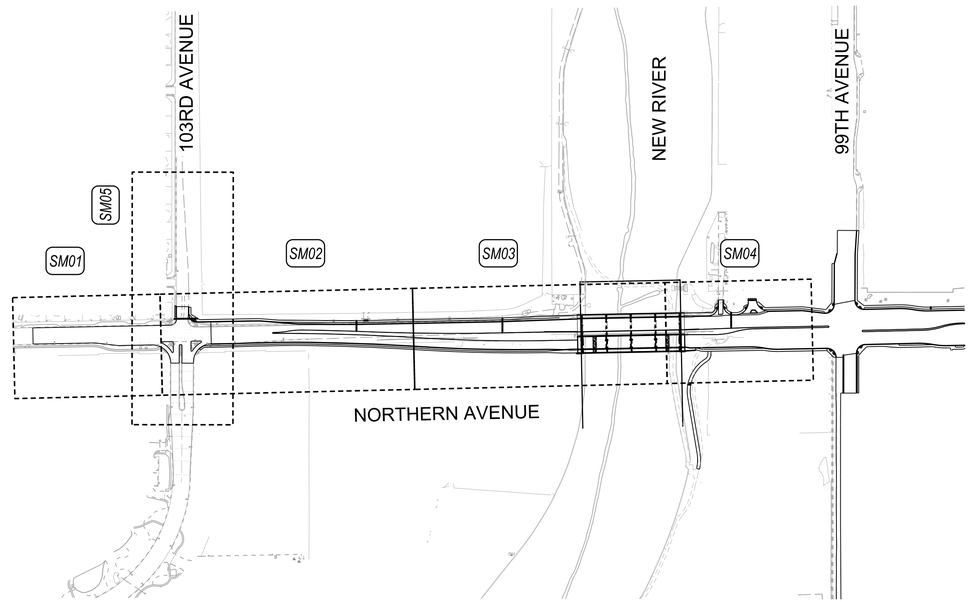

KEY MAP

Not to Scale

SM-- STRIPING SHEETS

PROJECT NO. TT0372

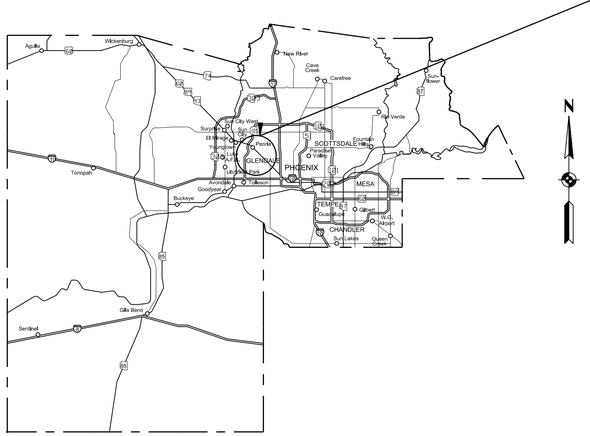
PHOENIX
GLENDALE
SCOTTSDALE
MESA
TEMPE
CHANDLER
Tonopah
Buckeye
Gila Bend
Sentinel
Wickenburg
New River
Cave Creek
Carefree
Fort Mohave
Bullhead City
Lake Havasu City
Kingman
Parker
Quartzsite
Yuma
Somerton
San Luis
Dateland
Wellton
Tacna
Ajo
Why
Sells
Tucson
Nogales
Douglas
Bisbee
Benson
Tombstone
Sierra Vista
Willcox
Safford
Thatcher
Globe
Superior
Miami
Hayden
Winkelman
Eloy
Casa Grande
Coolidge
Florence
Apache Junction
Gilbert
Queen Creek
Maricopa
Tolleson
Avondale
Goodyear
Litchfield Park
Buckeye
Tonopah
Gila Bend
Sentinel
Wickenburg
Aguila

F.H.W.A. REGION	STATE	PROJECT NO.	SHEET NO.	TOTAL SHEETS	RECORD DRAWING
9	AZ	TT0372	107	224	

GENERAL STRIPING NOTES

ALL PAVEMENT MARKINGS SHALL BE IN COMPLIANCE WITH THE LATEST MANUAL ON UNIFORM TRAFFIC CONTROL DEVICES (MUTCD), INCULDING THE ARIZONA SUPPLEMENT. THE ARIZONA DEPARTMENT OF TRANSPORTATION (ADOT) SIGNING AND MARKING STANDARD DRAWINGS, DETAILS AND SPECIFICATIONS, THESE PLANS, AND THE SPECIAL PROVISIONS.

THE WORK UNDER THE SECTION CONSISTS OF THE CONTRACTOR FURNISHING ALL MATERIALS, PREPARING THE PAVEMENT SURFACE, AND INSTALLING THE PAVEMENT MARKINGS. ALL PAVEMENT MATERIALS SHALL BE APPROVED BY MCDOT PRIOR TO INSTALLATION.

THE CONTRACTOR AND RESIDENT ENGINEER SHALL CONTACT MCDOT A MINIMUM OF 72 HOURS IN ADVANCE OF STRIPING LAY-OUT TO OBTAIN THE NECESSARY LANE CLOSURE PERMITS.

THE CONTRACTOR SHALL LAY-OUT ALL STRIPING AND MARKING FOR MCDOT REVIEW AND APPROVAL A MINIMUM OF (2) WORKING DAYS BEFORE INSTALLATION.

CONTRACTOR TO SPOT THE ENTIRE PROJECT BEFORE STRIPING. CONTRACTOR TO CALL MCDOT INSPECTOR, TO MAKE ARRANGEMENTS FOR INSPECTION PRIOR TO APPLYING PAVEMENT MARKING. THE PERMANENT PAVEMENT MARKING PLANS MAY BE MODIFIED AS DIRECTED BY THE ENGINEER. ANY STRIPING APPLIED BEFORE LAYOUT APPROVAL BY INSPECTOR SHALL BE SUBJECT TO REMOVAL AND RE STRIPING AT THE CONTRACTOR'S EXPENSE.

ALL PAVEMENT STRIPING DIMENSIONS ARE TO FACE OF CURB AND CENTER OF STRIPE OR CENTER OF DOUBLE STRIPES.

THE CONTRACTOR SHALL CLEAN THE ROADWAY SURFACE TO THE SATISFACTION OF THE ENGINEER, BY SWEEPING AND AIR-JET BLOWING, IMMEDIATELY PRIOR TO THE PLACEMENT OF ALL PAVEMENT MARKINGS. THE ROADWAY SURFACE SHALL BE DRY. THE AIR AND PAVEMENT TEMPERATURES SHALL BE A MINIMUM OF 55 DEGREES F AND RISING FOR THE INSTALLATION OF THERMOPLASTIC STRIPING, INCLUDING EXTRUDED THERMOPLASTIC. THE PAVEMENT TEMPERATURE SHALL NOT BE LESS THAN 40 DEGREES F AND THE AIR TEMPERATURE SHALL NOT BE LESS THAN 35 DEGREES F FOR THE PLACEMENT OF EPOXY PAVEMENT MARKINGS. THE AIR AND PAVEMENT TEMPERATURES SHALL NOT BE LESS THAN 60 DEGREES F FOR THE INSTALLATION OF TYPE I, II, OR III PREFORMED PAVEMENT MARKING TAPE. TYPE I TAPE SHALL NOT BE INSTALLED IF RAIN IS ANTICIPATED 48 HOURS PRIOR TO OR AFTER INTENDED INSTALLATION DATE.

WHEN STRIPING OBLITERATION IS NECESSARY, IT SHALL BE ACCOMPLISHED BY WATER BLASTING OF OTHER APPROVED METHODS STATED IN SECTION 460 OF THE MCDOT SUPPLEMENT TO MAG SPECIFICATIONS. IF THE REMOVAL OF THE STRIPING CAUSES A DEPRESSION OF A ½INCH OR GREATER IN DEPTH OF THE PAVEMENT SURFACE, THE CONTRACTOR SHALL SEAL THE AREA WITH SLURRY PER M.A.G. STANDARD SPECIFICATION 715, TYPE I. PAINTING OVER STRIPING DOES NOT CONSTITUTE STRIPE OBLITERATION. STRIPING OBLITERATION MAY GO BEYOND DESIGNATED PROJECT LIMITS. STRIPING OBLITERATION SHALL EXTEND AS NEEDED TO ALLOW APPROPRIATE MATCHING OF THE NEW STRIPING WITH EXISTING STRIPING.

PAINT SHALL BE IN ACCORDANCE WITH SECTION 461 OF THE MCDOT SUPPLEMENT TO MAG SPECIFICATIONS.

PERMANENT WHITE AND YELLOW STRIPING SHALL BE 90MIL THICK HOT-SPRAYED THERMOPLASTIC REFLECTORIZED STRIPING IN ACCORDANCE WITH SECTION 462 OF THE MCDOT SUPPLEMENT TO MAG SPECIFICATIONS. THERMOPLASTIC STRIPING SHALL BE INSTALLED 30 DAYS AFTER THE FINAL ROADWAY PAVING.

WHEN THERMOPLASTIC STRIPING, SYMBOLS, OR LEGENDS ARE TO BE APPLIED TO NEW CONCRETE PAVEMENT, ANY CURING COMPOUND PRESENT SHALL BE REMOVED BY METHODS APPROVED BY THE ENGINEER. ON BOTH NEW AND EXISTING CONCRETE PAVEMENT A PRIMER-SEALER, AS RECOMMENDED BY THE THERMOPLASTIC MANUFACTURER, SHALL BE APPLIED TO THE CONCRETE PAVEMENT PRIOR TO THE PLACEMENT OF THE THERMOPLASTIC MATERIAL.

ALL YELLOW AND WHITE BROKEN LANE LINES SHALL HAVE A COMMON START POINT AND CYCLE LENGTH, SO AS TO BE RESTRIPED SIMULTANEOUSLY, USING A COMMON CYCLE LENGTH ON BOTH SIDES OF THE TRUCK CARRIAGE. THE CYCLE LENGTH IS TO BE 40 FEET WITH A 10 FOOT LONG LINE AND A 30 FOOT SPACE BETWEEN LINES.

ALL RAISED PAVEMENT MARKERS SHALL HAVE AN ABRASION-RESISTANT COATING ON THE FACE OF THE PRISMATIC REFLECTORS AND SHALL CONFORM TO THE DETAILS OF ADOT STANDARD DRAWING NUMBER M-19. THEY SHALL BE INSTALLED WITH A BITUMINOUS ADHESIVE PER SECTION 463.2.4 OF THE MCDOT SUPPLEMENT TO MAG SPECIFICATIONS.

ALL RAISED PAVEMENT MARKERS SHALL BE INSTALLED SO THAT THE REFLECTIVE FACE OF EACH MARKER IS FACING THE DIRECTION OF TRAFFIC AND IS PERPENDICULAR TO THE DIRECTION OF TRAFFIC FLOW. TYPE C PAVEMENT MARKERS SHALL BE INSTALLED SO THAT THE CLEAR REFLECTIVE FACE OF EACH MARKER IS FACING APPROACHING TRAFFIC AND PERPENDICULAR TO THE DIRECTION OF TRAFFIC FLOW.

WHERE RAISED PAVEMENT MARKERS ARE PLACED ALONG SOLID STRIPING, THE NEAREST EDGE OF EACH MARKER SHALL BE OFFSET 2 INCHES FROM THE NEAREST EDGE OF THE STRIPE.

RAMP STRIPING SHALL FOLLOW RAMP CENTERLINE GEOMETRY UNLESS OTHERWISE NOTED. NORTHERN PARKWAY STRIPING SHALL FOLLOW NORTHERN PARKWAY GEOMETRY UNLESS OTHERWISE NOTED.

THE PERMANENT PAVEMENT MARKING PLANS MAY BE MODIFIED AS DIRECTED BY THE ENGINEER.

SEE THE FOLLOWING ADOT STANDARD DRAWINGS FOR ADDITIONAL STRIPING DETAILS: M-2, M-6, M-10, M-11, M-12, M-13, M-15, M-16, M-17, AND M-19.

THE PAVEMENT MARKING DRAWINGS ARE SCHEMATIC ONLY AND NOT TO SCALE. THE CONTRACTOR SHALL FOLLOW ALL DIMENSIONS AND DETAILS WHEN INSTALLING PAVEMENT MARKINGS.

INSTALLATION FOR STRIPING ALL STOP BARS AND CROSSWALKS SHALL BE IN ACCORDANCE WITH SECTION 462 OF THE MCDOT SUPPLEMENT TO MAG SPECIFICATIONS.

INSTALLATION AND MATERIAL FOR TURN ARROWS AND LEGENDS SHALL BE IN ACCORDANCE WITH SECTION 462 OF THE MCDOT SUPPLEMENT TO MAG SPECIFICATIONS.

RAISED PAVEMENT MARKERS SHALL BE IN ACCORDANCE WITH SECTION 463 OF THE MCDOT SUPPLEMENT TO MAG SPECIFICATIONS AND THE PROJECT SPECIFICATIONS.

GENERAL SIGNING NOTES

INSTALLATION OF ALL SIGNS SHALL BE IN COMPLIANCE WITH THE MCDOT SUPPLEMENT TO THE MARICOPA ASSOCIATION OF GOVERNMENTS' (MAG) UNIFORM STANDARD SPECIFICATIONS FOR PUBLIC WORKS CONSTRUCTION; SECTIONS 464 AND 465, THESE PLANS AND THE SPECIAL PROVISIONS.

THE CONTRACTOR SHALL BE RESPONSIBLE FOR SECURING ALL UNDERGROUND UTILITY LOCATIONS WHERE FOUNDATIONS ARE INSTALLED. SPECIAL CARE NEEDS TO BE TAKEN TO INSURE THAT ALL UNDERGROUND UTILITIES ARE AVOIDED. UTILITY LOCATIONS ARE NOT SHOWN ON THE SIGNING PLANS.

WHERE SIGNS ARE BEING REMOVED OR REPLACED, THE FOUNDATIONS SHALL BE REMOVED ENTIRELY OR THE FOUNDATION SHALL BE REMOVED A MINIMUM OF TWO FEET BELOW FINISHED GRADE, AS DIRECTED BY THE ENGINEER.

ALL STATION LOCATIONS AND OFFSETS SHOWN ON THE SIGNING PLANS ARE APPROXIMATE. THE CONTRACTOR SHALL MARK ALL SIGN LOCATIONS AND CONTACT THE MCDOT PROJECT INSPECTOR, TO COORDINATE INSPECTION WITH THE COUNTY'S TRAFFIC ENGINEER, OR HIS REPRESENTATIVE PRIOR TO ANY PERMANENT SIGN INSTALLATION. ALL SIGNING INSTALLED PRIOR TO INSPECTION, IF MODIFICATION IS REQUIRED, SHALL BE REMOVED AND REINSTALLED AT THE CONTRACTOR'S EXPENSE. PERMANENT SIGNING MAY BE MODIFIED AS DIRECTED BY THE COUNTY'S TRAFFIC ENGINEER OR HIS REPRESENTATIVE.

THE CONTRACTOR SHALL PROVIDE AND INSTALL ALL TRAFFIC CONTROL SIGNING, PERFORATED POSTS, U-CHANNEL POSTS, AND FOUNDATIONS FOR THE SIGN POSTS, AT APPROVED LOCATIONS. ALL TRAFFIC SIGNS SHALL BE ATTACHED TO THE STREET LIGHT POLES IF THE POLE IS WITHIN 25 FEET OF THE SIGN LOCATION AS SHOWN ON THE PLANS. SIGNS MOUNTED ON POSTS IN PEORIA'S MAINTENANCE AREA SHALL BE PER PE-060. SIGNS MOUNTED ON STREETLIGHT POLES IN PEORIA'S MAINTENANCE AREA SHALL BE PER PE-061. ANY QUESTIONS CONCERNING SIGNING, CONTACT THE PROJECT INSPECTOR.

GENERAL SIGNING NOTES

STANDARD OFFSET FOR ALL SIGNS IS 12 FEET FROM THE NEAR EDGE OF SIGN TO THE EDGE OF PAVEMENT WITHOUT CURB AND GUTTER, AND 2 FEET MINIMUM FROM THE NEAR EDGE OF SIGN TO THE FACE OF CURB WITH CURB AND GUTTER. THE SIGN HEIGHT, MEASURED VERTICALLY FROM THE BOTTOM OF THE SIGN TO THE ELEVATION OF THE NEAR EDGE OF THE PAVEMENT SHALL BE 5 FEET FOR RURAL AND 7 FEET FOR URBAN AREAS UNLESS OTHERWISE NOTED.

ALL FACE OF BOLTS AND NYLON WASHERS USED FOR MOUNTING SIGNS SHALL MATCH THE COLOR IN THE PART OF THE SIGN PANEL IN WHICH THEY ARE TO BE PLACED.

POST LENGTHS INDICATED ON THE SIGN SUMMARY SHEETS ARE APPROXIMATE. THE CONTRACTOR SHALL VERIFY ACTUAL POST LENGTHS.

ALL POSTS, FOUNDATIONS, AND SIGN PANELS SHALL BE NEW UNLESS OTHERWISE DIRECTED.

ALL PERFORATED POSTS AND FOUNDATIONS SHALL BE IN CONFORMANCE WITH ADOT SIGNING AND MARKING STANDARD DWG NO. S-3 UNLESS OTHERWISE NOTED.

ALL SIGNING SHALL BE MADE OF FLAT SHEET ALUMINUM PANELS UNLESS OTHERWISE DIRECTED WITH THE RETROREFLECTIVE SHEETING AND DIRECT APPLIED OR SILK SCREENED CHARACTERS PER SECTIONS 465.2.3 AND 465.2.4 OF THE MCDOT SUPPLEMENT TO THE MARICOPA ASSOCIATION OF GOVERNMENTS' (MAG) UNIFORM STANDARD SPECIFICATIONS FOR PUBLIC WORKS CONSTRUCTION.

THE CONTRACTOR SHALL REPLACE ANY SIGNS, OBJECT MARKERS AND DELINEATORS DAMAGED AS A RESULT OF THE CONSTRUCTION ACTIVITIES AT THE CONTRACTOR'S EXPENSE.

THE ENGINEER MAY MODIFY THE SIGNING PLANS.

SIGNS THAT NEED TO BE REMOVED DURING CONSTRUCTION SHALL BE REMOVED BY THE CONTRACTOR. THE CONTRACTOR SHALL REMOVE ALL PERMANENT SIGNING THAT IS NO LONGER APPLICABLE AND STORE SIGN PANELS AND POSTS IN THE CONTRACTOR'S ON-SITE CONSTRUCTION YARD. CONTRACTOR SHALL SCHEDULE WITH INSPECTOR THE DELIVERY OF SALVAGED SIGNING MATERIAL (SIGN PANELS & POSTS, ETC.) TO 2909 W. DURANGO ST.

G= HIGH INTENSITY PRISMATIC SHEETING
D= DIAMOND GRADE SHEETING
SB= SLIP BASES PER ADOT STD DWG S-3
FDN= PERFORATED POST FOUNDATION PER MCDOT STD DETAIL 2058

STRIPING DESIGN DATA

NORTHERN PARKWAY
STATION 478+24 to STATION a 100+40
CLASSIFICATION .....URBAN PRINCIPAL ARTERIAL
WITH FULL ACCESS CONTROL
TERRAIN.....LEVEL
POSTED SPEED.....40 MPH
DESIGN SPEED.....55 MPH

Bike Lane Transition Pavement Marking Detail

Not to Scale

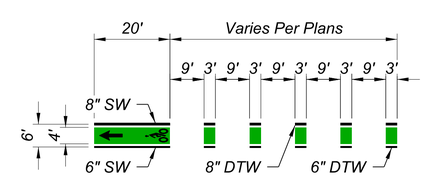

STRIPING LEGEND:

6 BW 40	6" Broken white line with a 10' line segment and a 30' gap with type 'G' rpm's @ 40' spacing
4 BW 40	4" Broken white line with a 15' line segment and a 25' gap with type 'G' rpm's @ 40' spacing
4 DTW	4" Dashed white line with a 2' line segment and a 4' gap
6 DTW	6" Dashed white line with a 3' line segment and a 9' gap
8 DTW	8" Dashed white line with a 3' line segment and a 9' gap
4 DY 20	4" Solid double yellow line with type 'D' rpm's @ 20' spacing
6 SW	6" Solid white line
8 SW	8" Solid white line
12 SW	12" Solid white line
8 SW 20	8" Solid white line with type 'G' rpm's @ 20' spacing
8 BW 24	8" Broken white line with a 3' line segment and a 9' gap with type 'G' rpm's @ 24' spacing
4 SBYM	TYPE 'D' / TYPE 'D' — 4" Double yellow line, one solid, one broken with a 10' line segment and a 30' gap, with type 'D' rpm's @ a 40' spacing (broken) type 'D' rpm's @ a 20' spacing (solid)
EX	Existing Pavement Markings
	Premark by Ennis-Flint "Bike Lane Transition" Pavement Markings Dashed White Line and Green Fill Width per Plans

NO.	REVISION	BY	DATE
3			
2			
1			

MARICOPA COUNTY

NORTHERN PARKWAY
103RD AVENUE TO 91ST AVENUE - PHASE 1
PROJECT NO. TT0372

	BY	DATE
DESIGNED	B. POE	05/2026
DRAWN	C. BURDETT	05/2026
CHECKED	J. BARR	05/2026

BRENAN POE — ARIZONA, U.S.A.

TYLin

SIGNING AND PAVEMENT MARKING NOTES — SHEET SN01

TRACS NO.

$PLTDRVS$ $PENTBLS$ 10:39:06 AM 5/7/2026 $USER$ $DATE$ $NAME$
pw://tyli-pw.bentley.com:tyli-pw-01/Documents/Projects/221991.00_TT0372/600_CADD/05_Official/Dgn_PHASE 1/Sheets/TT0372_ST_SignMarking.dgn

CITY OF PEORIA PAVEMENT MARKING & SIGNING NOTES

1. Signing and striping installations shall be in accordance with the current edition of the Manual on Uniform Traffic Control Devices (MUTCD) adoped by the Arizona Department of Transportation (ADOT) and the City of Peoria Engineering Standards Manual.

2. Signing and striping layout shall be approved by the Engineering Inspector prior to any installation. The Contractor shall notify the City of Peoria's Engineering Inspection Division, 623-773-8445, at least 48 hours in advance of any signing or striping installation. Signing or striping installations completed prior to contacting the City's Engineering Inspection Division shall be removed and/or modified if it is not deemed adequate by the Engineering Inspector.

PAVEMENT MARKING

3. All road surfaces shall be prepared per manufacturer's instruction or to the satisfaction of the Engineering Inspector prior to application of pavement markings. At a minimum surfaces shall have debris removed, be cleaned and dried prior to application.

4. Unless otherwise noted, all dimensions are to the face of curb and the center of the stripe. In the case of a double stripe, dimension is to the center of the double stripe.

5. All pavement markings shall be installed in accordance with the City of Peoria Engineering Standards Manual and the manufacturer's recommendations.
   - Longitudinal line markings shall be installed using water-based paint applied a a minimum of .15 Mil thickness at the time of application. Any longitudinal line greater than 100' in total length, including spaces, shall be applied using an airless truck-mounted striping machine equipped with a skip-line control system calibrated to install correct line patterns and lengths.
   - Short-line markings, including crosswalks, stop bars, chevrons and crosshatch markings and normal dotted lines to guide turning movements shall be installed using alkyd thermoplastic material applied at a minimum .90 Mil thickness or 3M Stamark Pavement Marking Tape. Determination of material used shall be addressed in striping plans or by the Engineering Inspector.
   - Word symbol and other legend markings shall be installed in 3M Stamark Pavement Marking Tape or other material approved by the Engineering Inspector.

6. The obliteration of prior or conflicting pavement markings shall be accomplished by water blasting with vacuum recovery or other methods approved by the Engineering Inspector. A Type II micro seal treatment approved by the Engineering Inspector shall be applied in a minimum 3-foot wide, continuous application to the portions of the affected asphalt following obliteration in the case of longitudinal lines, or in a rectangular area to completely cover the affected area in the case of pavement symbols and legends. Where multiple conflicting pavement markings are removed, the Engineering Inspector may require the Type II micro seal to be applied over the entire roadway and the affected area restriped. The Type II micro seal treatment can be applied directly over a single application of water-based paint without paint obliteration, if approved by the Engineering Inspector. All Type II micro seal treatment shall be approved by the Engineering Inspector.

SIGNING

7. All sign blanks shall be .080-gauge alumimum, unless otherwise noted and all signs shall be ASTM Type IV high intensity sheeting, unless otherwise noted.

8. Signs installed on posts shall be installed per PE-060, using square tubing rolled from 12 Gauge (0.105-USS Gauge) cold rolled steel perforated with 7/16" diameter holes spaced 1" on center on all sides. Posts shall be mounted in a 2" x 2" x 30" anchor to be driven into the ground pneumatically or hydraulically so it is 28" in the gound and 2" above ground. The Contractor shall contact Blue Stake before digging. Care shall be taken to ensure unobstructed views for all signs installed.

9. Signs installed on street light poles shall be installed per PE-061, using a minimum 1/2" wide stainless-steel banding (C20499) with a minimum thickness of .030, a banding buckle (C25499) and a (D02189) banding bracket. Street name signs shall be installed using banding listed above except replacing the banding bracket with a (KC250) cantilever bracket, round bracket (922SF), and a cross bracket (990SF); 6" signs shall have 6" wide brackets and 9" signs shall have 12" wide brackets.

10. Parking restriction signs shall be set at an angle of not less than 30 degrees or more than 45 degrees with the line of traffic flow in order to be visible to approaching traffic, per guidance in Section 2B of the MUTCD.

11. All signs shall be provided and installed by the Contractor per the approved permitted plans.

12. The Contractor shall return all traffic signal equipment and signs that are removed to the City of Peoria Municipal Operations Center (MOC), 8850 N. 79th Avenue. Contact the Streets Administration Office at 623-773-7456 to set up a drop-off time.

13. The sign types and sizes included in the Peoria Sign Reference Guide provide additional guidance and clarification to the MUTCD, as it is applied in the City of Peoria.

14. The Engineering Inspector may require the Contractor to make any adjustments deemed necessary to address conditions not included in the approved permitted plans.

STRIPING LEGEND CONTINUED:

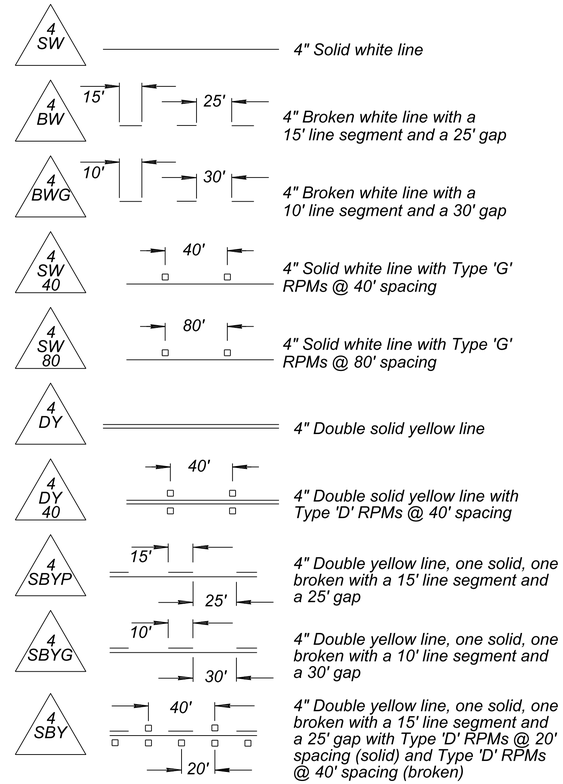

NO.	REVISION	BY	DATE
3			
2			
1			

MARICOPA COUNTY

NORTHERN PARKWAY
103RD AVENUE TO 99TH AVENUE
PROJECT NO.TT0372

	BY	DATE
DESIGNED	B. LOGAN	04/2026
DRAWN	B. LOGAN	04/2026
CHECKED	C. LEMKA	04/2026

Registered Professional Engineer (Civil) CERTIFICATE NO. 37302 CHRISTOPHER B. LEMKA 04/30/2026

BURGESS & NIPLE
1230 W. WASHINGTON ST. SUITE 511
TEMPE, AZ 85288

SIGNING AND PAVEMENT MARKING NOTES

SHEET SN02

TRACS NO.

Projects\221991.00_TT0372\600_CADD\05_Official\Dgn_PHASE 1\Sheets\B&N\TT0372_ST_SignMarking_Notes_02.dgn
4:27:56 PM 5/8/2026

STRIPING QUANTITIES
STA 478+24 TO 499+81
B&N SECTION

CONTRACTOR'S BID QUANTITIES - ENGLISH UNITS

ALL SHEETS HAVE BEEN COMBINED AND INCREASED BY 10% TO ALLOW FOR FIELD ADJUSTMENTS. REFER TO THE SPEC. FOR TYPE OF MATERIAL TO USE, i.e., PAINT, THERMOPLASTIC, RPM's, TAPE, BARRIER MARKERS, ETC.

STRIPING IS BASED ON A 4 INCH LINE

0.09" THERMOPLASTIC STRIPE

WHITE	2,532	± LF.
YELLOW	-	± LF.
TOTAL	2,532	± LF.

REFELECTORIZED PAINT

WHITE	7,400	± LF.
YELLOW	5,683	± LF.
TOTAL	13,083	± LF.

TEMPORARY PAINT REFELECTORIZED PAINT

WHITE	10,666	± LF.
YELLOW	5,683	± LF.
TOTAL	16,349	± LF.

GRAND TOTAL

31,964 ± LF.

MARKERS RAISED & BARRIER / LEGEND & QUANTITY

STIMSONITE MARKERS - 4 INCH WIDTH

TYPE C = CLEAR / RED Reflective	= -	± Ea.
TYPE D = YELLOW, 2-WAY Reflective	= 150	± Ea.
TYPE E - YELLOW/RED Reflective	= -	± Ea.
TYPE G = CLEAR, 1-WAY Reflective	= 134	± Ea.
TYPE H = YELLOW, 1-WAY Reflective	= -	± Ea.

CERAMIC BUTTON - 4 INCH DIAMETER

TYPE A = WHITE Non-Reflective	= -	± Ea.
TYPE AY = YELLOW Non-Reflective	= -	± Ea.

BARRIER MARKERS BRIDGE & CONCRETE

TYPE BM-1 = WHITE 1-WAY REFFLECTIVE	= -	± Ea.
TYPE BM-2 = YELLOW 1-WAY REFFLECTIVE	= -	± Ea.

BARRIER MARKERS GUARDRAIL

WHITE = REFER TO ADOT SIGNING & MARKING DRAWING No. M-32	= -	± Ea.
SAND BARREL CRASH CUSHION ADOT SIGNING AND MARKING DRAWING No. M-35	= -	± Ea.
TRAFFIC DRUM	= -	± Ea.

GRAND TOTAL = 284 ± Ea.

PREFORMED TAPE TYPE 1 - PERMANENT

WHITE	-	± LF
YELLOW	-	± LF
TOTAL	-	± LF

ARROWS

LEFT	6	± Ea.
RIGHT	3	± Ea.
STRAIGHT	-	± Ea.
COMBO	-	± Ea.
MERGE	2	± Ea.
WRONG WAY	-	± Ea.
TOTAL	11	± Ea.

LEGENDS

A LEGEND IS A SINGLE WORD, i.e., SLOW & ONLY, STOP AHEAD IS CONSIDERED AS TWO SEPARATE LEGENDS.

TOTAL - ± Ea.

SYMBOLS

SYMBOLS ARE RxR MARKINGS & BIKE LANE MARKINGS, ETC.

TOTAL - ± Ea.

RAISED YELLOW MEDIANS & WHITE ISLANDS

YELLOW - ± Ea. WHITE - ± Ea. TOTAL - ± Ea.

RPM NOTE: MARKERS SHALL BE PLACED SO THAT ITS REFLECTIVE FACE IS PERPENDICULAR TO TRAFFIC.

NO.	REVISION	BY	DATE
3			
2			
1			

MARICOPA COUNTY

NORTHERN PARKWAY
103RD AVENUE TO 99TH AVENUE
PROJECT NO. TT0372

	BY	DATE
DESIGNED	B. LOGAN	04/2026
DRAWN	B. LOGAN	04/2026
CHECKED	C. LEMKA	04/2026

BURGESS & NIPLE
1230 W. WASHINGTON ST. SUITE 511
TEMPE, AZ 85288

PAVEMENT MARKING QUANTITIES — SHEET SN03

STRIPING QUANTITIES
STA 478+24 TO STA 100+40
TYLIN SECTION

CONTRACTOR'S BID QUANTITIES - ENGLISH UNITS

ALL SHEETS HAVE BEEN COMBINED AND INCREASED BY 10% TO ALLOW FOR FIELD ADJUSTMENTS. REFER TO THE SPEC. FOR TYPE OF MATERIAL TO USE, i.e., PAINT, THERMOPLASTIC, RPM's, TAPE, BARRIER MARKERS, ETC.

STRIPING IS BASED ON A 4 INCH LINE

0.09" THERMOPLASTIC STRIPE

WHITE	-	± LF.
YELLOW	-	± LF.
TOTAL	-	± LF.

TEMPORARY PAINT REFELECTORIZED PAINT

WHITE	-	± LF.
YELLOW	-	± LF.
TOTAL	-	± LF.

GRAND TOTAL

- ± LF.

MARKERS RAISED & BARRIER / LEGEND & QUANTITY

STIMSONITE MARKERS - 4 INCH WIDTH

TYPE C = CLEAR / RED Reflective	= -	± Ea.
TYPE D = YELLOW, 2-WAY Reflective	= -	± Ea.
TYPE E - YELLOW/RED Reflective	= -	± Ea.
TYPE G = CLEAR, 1-WAY Reflective	= -	± Ea.
TYPE BB = BLUE, 2-WAY Reflective	= -	± Ea.

CERAMIC BUTTON - 4 INCH DIAMETER

TYPE A = WHITE Non-Reflective	= -	± Ea.
TYPE AY = YELLOW Non-Reflective	= -	± Ea.

BARRIER MARKERS BRIDGE & CONCRETE

TYPE BM-1 = WHITE 1-WAY REFFLECTIVE	= -	± Ea.
TYPE BM-2 = YELLOW 1-WAY REFFLECTIVE	= -	± Ea.

BARRIER MARKERS GUARDRAIL

WHITE = REFER TO ADOT SIGNING & MARKING DRAWING No. M-32	= -	± Ea.
SAND BARREL CRASH CUSHION ADOT SIGNING AND MARKING DRAWING No. M-35	= -	± Ea.
TRAFFIC DRUM	= -	± Ea.

GRAND TOTAL = - ± Ea.

PREFORMED TAPE TYPE 1 - PERMANENT

	-	± LF
YELLOW	-	± LF
	-	± LF

ARROWS

LEFT	-	± Ea.
RIGHT	-	± Ea.
STRAIGHT	-	± Ea.
COMBO	-	± Ea.
MERGE	-	± Ea.
TOTAL	-	± Ea.

LEGENDS

A LEGEND IS A SINGLE WORD, i.e., SLOW & ONLY, STOP AHEAD IS CONSIDERED AS TWO SEPARATE LEGENDS.

TOTAL - ± Ea.

SYMBOLS

SYMBOLS ARE RxR MARKINGS & BIKE LANE MARKINGS, ETC.

TOTAL - ± Ea.

RAISED YELLOW MEDIANS & WHITE ISLANDS

YELLOW - ± Ea. WHITE - ± Ea. TOTAL - ± Ea.

RPM NOTE: MARKERS SHALL BE PLACED SO THAT ITS REFLECTIVE FACE IS PERPENDICULAR TO TRAFFIC.

Contact Arizona 811 Two Working Days Before You Dig
ARIZONA811 BLUE STAKE, INC.
Call 811 or Click Arizona811.com

NO.	REVISION	BY	DATE
3			
2			
1			

MARICOPA COUNTY

NORTHERN PARKWAY
103RD AVENUE TO 91ST AVENUE - PHASE 1
PROJECT NO. TT0372

	BY	DATE
DESIGNED	B. POE	05/2026
DRAWN	C. BURDETT	05/2026
CHECKED	J. BARR	05/2026

TYLin

SIGNING AND PAVEMENT MARKING QUANTITIES — SHEET SN03

TRACS NO.

MCDOT PW Rendition
5/8/2026 4:26:23 PM brooke.logan@burgessniple.com MCDOT CE
Projects\221991.00_TT0372\600_CADD\05_Official\Dgn_PHASE 1\Sheets\TT0372_ST_SignMarking_Quantities.dgn

F.H.W.A. REGION	STATE	PROJECT NO.	SHEET NO.	TOTAL SHEETS	RECORD DRAWING
9	AZ	TT0372	110	224	

SIGNING SUMMARY

STA.	SIGN CODE	WORK: NEW	WORK: EXISTING: RELOCATE	WORK: EXISTING: REMOVE & SALVAGE	WORK: SEE REMARKS	OFFSET FROM EP: Lt (ft)	OFFSET FROM EP: Rt (ft)	PANEL: LEGEND	PANEL: SIGN SIZE: WIDTH (in)	PANEL: SIGN SIZE: HEIGHT (in)	PANEL: SHEETING TYPE AREA (sq. ft.): H	PANEL: SHEETING TYPE AREA (sq. ft.): D	GROUND MOUNT: POSTS: NO. POSTS	GROUND MOUNT: POSTS: TYPE (length): P (ft)	GROUND MOUNT: POSTS: TYPE (length): U (ft)	GROUND MOUNT: POSTS: FOUNDATIONS: P (ea)	GROUND MOUNT: POSTS: FOUNDATIONS: U (ea)	REMARKS
NORTHERN AVENUE																		
473+39	D3				X	-		104TH DR										To Remain
473+39	D3				X	-		NORTHERN AVE										To Remain
473+39	R1-1-30				X	-		STOP										To Remain
478+99	R2-1-40				X	-		SPEED LIMIT 40										To Remain
481+15	CUSTOM				X		-	GLENDALE AIRPORT										To Remain
482+15	R3-7-R				X		-	RIGHT LANE MUST TURN RIGHT										To Remain
485+04	R9-9	X					11	SIDEWALK CLOSED	24	12	2.0		1	11		1		
486+85	R3-7-R	X			X	-		RIGHT LANE MUST TURN RIGHT	36	36	9.0							Mount To Light Post
488+16	R2-1-40			X			-	SPEED LIMIT 40										
490+00	R3-2	X			X	-	2	No Left Turn Symbol	36	36	9.0							Mount To Light Post
490+85	R2-1-40	X			X		-	SPEED LIMIT 40	30	36	7.5							Mount To Light Post
494+70	R3-2	X			X	-	2	No Left Turn Symbol	36	36	9.0							Mount To Light Post
499+00	I-3	X			X		-	NEW RIVER	24	18	3.0							Mount To Light Post
499+64	I-3			X			-	NEW RIVER										
499+78	M-4	X					-	Type 4 Object Marker	18	18	2.25		1	11		1		
499+78	M-4	X					-	Type 4 Object Marker	18	18	2.25		1	11		1		
499+78	M-4	X					-	Type 4 Object Marker	18	18	2.25		1	11		1		
499+78	M-4	X					-	Type 4 Object Marker	18	18	2.25		1	11		1		
499+78	M-4	X					-	Type 4 Object Marker	18	18	2.25		1	11		1		
499+78	M-4	X					-	Type 4 Object Marker	18	18	2.25		1	11		1		
499+78	M-4	X					-	Type 4 Object Marker	18	18	2.25		1	11		1		
499+78	M-4	X					-	Type 4 Object Marker	18	18	2.25		1	11		1		
499+78	M-4	X					-	Type 4 Object Marker	18	18	2.25		1	11		1		
499+80	M-1	X				2		Type 3 Object Marker	18	18	2.25		1	11		1		
499+80	M-1	X				7		Type 3 Object Marker	18	18	2.25		1	11		1		
103RD AVENUE/GLEN HARBOR BOULEVARD																		
30+73	COG-2			X		-		WELCOME TO GLENDALE										
30+73	COG-2	X				3		WELCOME TO GLENDALE	36	48	12.0		2	26		2		
31+09	R3-5-R				X	-		Right Turn Arrow ONLY										To Remain
31+09	R3-5f				X	-		RIGHT LANE										To Remain
32+56	R4-7				X		-	Keep Right Symbol										To Remain
32+56	M-3-L				X		-	Type 3 Object Marker										To Remain
											76.25		**14**	**158**		**14**		**SUB-TOTAL**

H= HIGH INTENSITY PRISMATIC SHEETING

D= ASTM D4956 TYPE XI OR EQUAL

DESIGN SPEED= 40 MPH / 55 MPH

P= PERFORATED POSTS

U= U-CHANNEL POST

Contact Arizona 811 Two Working Days Before You Dig

ARIZONA811 BLUE STAKE, INC.

Call 811 or Click Arizona811.com

NO.	REVISION	BY	DATE
3			
2			
1			

MARICOPA COUNTY

NORTHERN PARKWAY
103RD AVENUE TO 99TH AVENUE
PROJECT NO.TT0372

	BY	DATE
DESIGNED	B. LOGAN	04/2026
DRAWN	B. LOGAN	04/2026
CHECKED	C. LEMKA	04/2026

Registered Professional Engineer (Civil) CERTIFICATE NO. 37382 CHRISTOPHER B. LEMKA 04/30/2026

BURGESS & NIPLE
1230 W. WASHINGTON ST. SUITE 511
TEMPE, AZ 85288

SIGN SUMMARY SHEET

SHEET SS01

TRACS NO.

4:30:27 PM 5/8/2026

Projects\221991.00_TT0372\600_CADD\05_Official\Dgn_PHASE 1\Sheets\B&N\TT0372_ST_Sign_Summary_99.dgn

F.H.W.A. REGION	STATE	PROJECT NO.	SHEET NO.	TOTAL SHEETS	RECORD DRAWING
9	AZ	TT0372	111	224	

SIGNING SUMMARY

STA.	SIGN CODE	WORK				OFFSET FROM EP		PANEL					GROUND MOUNT					REMARKS
			EXISTING						SIGN SIZE		SHEETING TYPE AREA (sq. ft.)		POSTS					
														TYPE (length)		FOUNDATIONS		
		NEW	RELOCATE	REMOVE & SALVAGE	SEE REMARKS	Lt (ft)	Rt (ft)	LEGEND	WIDTH (in)	HEIGHT (in)	H	D	NO. POSTS	P (ft)	U (ft)	P (ea)	U (ea)	
34+30	R3-5-R				X		-	Right Turn ONLY										To Remain
34+30	R3-5f				X		-	RIGHT LANE										To Remain
34+95	R1-2				X		-	YIELD										To Remain
35+12	R4-7				X	-		Keep Right Symbol										To Remain
35+12	M-3-L				X	-		Type 3 Object Marker										To Remain
36+31	R5-2			X			-	No Trucks Symbol										
36+37	R5-2	X					9	No Trucks Symbol	30	30	6.25		1	12		1		
37+24	R7-1				X	-		NO PARKING ANY TIME										To Remain
38+59	R2-1-35				X		-	SPEED LIMIT 35										To Remain
38+59	R7-1				X		-	NO PARKING ANY TIME										To Remain
											6.25		1	12		1		SUB-TOTAL
											82.5		15	170		15		PROJECT TOTAL

H= HIGH INTENSITY PRISMATIC SHEETING

D= ASTM D4956 TYPE XI OR EQUAL

DESIGN SPEED= 40 MPH / 55 MPH

P= PERFORATED POSTS

U= U-CHANNEL POST

Contact Arizona 811 Two Working Days Before You Dig

ARIZONA811 BLUE STAKE, INC.

Call 811 or Click Arizona811.com

NO.	REVISION	BY	DATE
3			
2			
1			

MARICOPA COUNTY

NORTHERN PARKWAY
103RD AVENUE TO 99TH AVENUE
PROJECT NO.TT0372

	BY	DATE
DESIGNED	B. LOGAN	04/2026
DRAWN	B. LOGAN	04/2026
CHECKED	C. LEMKA	04/2026

Registered Professional Engineer (Civil) CERTIFICATE NO. 37302 CHRISTOPHER B. LEMKA 5/8/2026

BURGESS & NIPLE

1230 W. WASHINGTON ST. SUITE 511
TEMPE, AZ 85288

SIGN SUMMARY SHEET

SHEET SS02

TRACS NO.

4:31:41 PM 5/8/2026

Projects\221991.00_TT0372\600_CADD\05_Official\Dgn_PHASE 1\Sheets\B&N\TT0372_ST_Sign_Summary_100.dgn

F.H.W.A. REGION	STATE	PROJECT NO.	SHEET NO.	TOTAL SHEETS	RECORD DRAWING
9	AZ	TT0372	112	224	

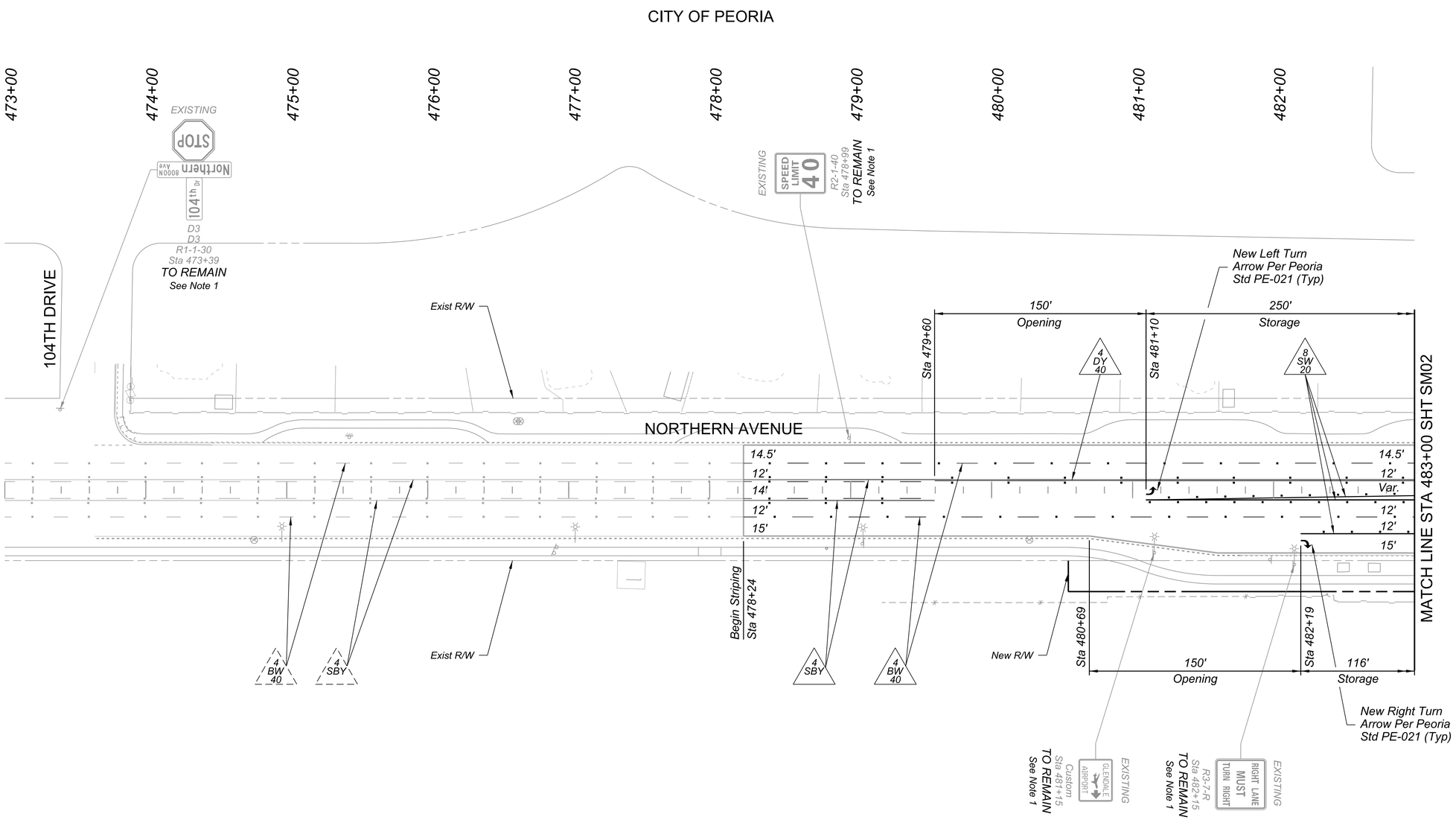

SCALE: Hor: 1"=40'
Vert: NA

40 0 40 80
SCALE IN FEET

NO.	REVISION	BY	DATE
3			
2			
1			

MARICOPA COUNTY

NORTHERN PARKWAY
103RD AVENUE TO 99TH AVENUE
PROJECT NO.TT0372

	BY	DATE
DESIGNED	B. LOGAN	04/2026
DRAWN	B. LOGAN	04/2026
CHECKED	C. LEMKA	04/2026

Registered Professional Engineer (Civil) CERTIFICATE NO. 37382 CHRISTOPHER B. LEMKA Date 04/30/2026

BURGESS & NIPLE
1230 W. WASHINGTON ST. SUITE 511
TEMPE, AZ 85288

SIGNING AND PAVEMENT MARKING
NORTHERN PARKWAY

SHEET SM01

TRACS NO.

Contact Arizona 811 Two Working Days Before You Dig
ARIZONA811 BLUE STAKE, INC.
Call 811 or Click Arizona811.com

NOTES:
1. Sign to be installed as part of MCDOT Project TT0600.

4:29:38 PM 5/8/2026

Projects\221991.00_TT0372\600_CADD\05_Official\Dgn_PHASE 1\Sheets\B&N\TT0372_ST_Striping_Northern_00A.dgn

F.H.W.A. REGION	STATE	PROJECT NO.	SHEET NO.	TOTAL SHEETS	RECORD DRAWING
9	AZ	TT0372	113	224	

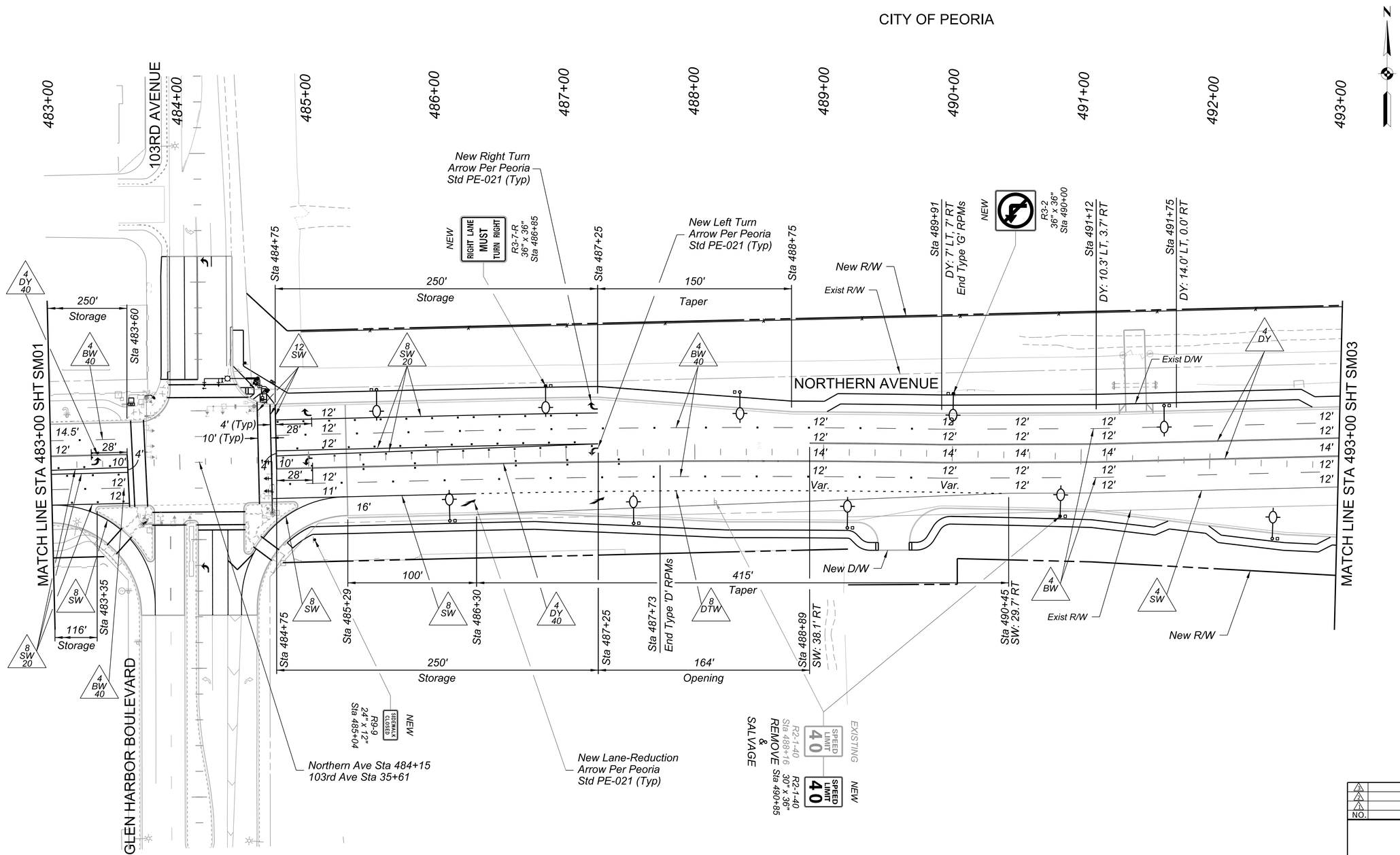

SCALE: Hor: 1"=40'
Vert: NA

40 0 40 80
SCALE IN FEET

NO.	REVISION	BY	DATE
3			
2			
1			

MARICOPA COUNTY

NORTHERN PARKWAY
103RD AVENUE TO 99TH AVENUE
PROJECT NO.TT0372

	BY	DATE
DESIGNED	B. LOGAN	04/2026
DRAWN	B. LOGAN	04/2026
CHECKED	C. LEMKA	04/2026

Registered Professional Engineer (Civil) CERTIFICATE NO. 37382 CHRISTOPHER B. LEMKA 04/30/2026

BURGESS & NIPLE
1230 W. WASHINGTON ST. SUITE 511
TEMPE, AZ 85288

Contact Arizona 811 Two Working Days Before You Dig
ARIZONA811 BLUE STAKE, INC.
Call 811 or Click Arizona811.com

SIGNING AND PAVEMENT MARKING
NORTHERN PARKWAY

SHEET SM02

TRACS NO.

4:31:58 PM 5/8/2026

Projects\221991.00_TT0372\600_CADD\05_Official\Dgn_PHASE 1\Sheets\B&N\TT0372_ST_Striping_Northern_008.dgn

F.H.W.A. REGION	STATE	PROJECT NO.	SHEET NO.	TOTAL SHEETS	RECORD DRAWING
9	AZ	TT0372	114	224	

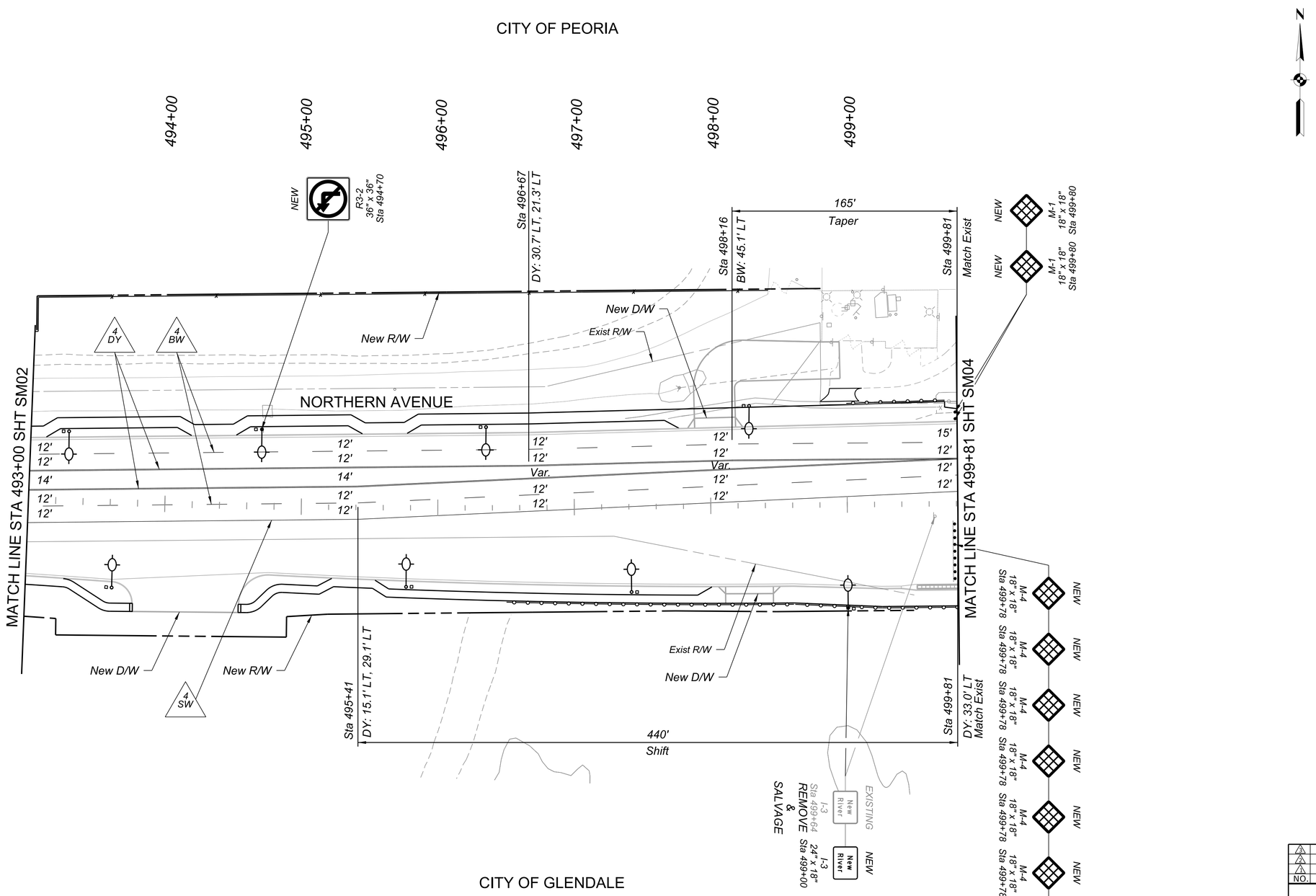

SCALE: Hor: 1"=40'
Vert: NA

40 0 40 80
SCALE IN FEET

NO.	REVISION	BY	DATE
3			
2			
1			

MARICOPA COUNTY

NORTHERN PARKWAY
103RD AVENUE TO 99TH AVENUE
PROJECT NO.TT0372

	BY	DATE
DESIGNED	B. LOGAN	04/2026
DRAWN	B. LOGAN	04/2026
CHECKED	C. LEMKA	04/2026

Registered Professional Engineer (Civil)
CERTIFICATE NO. 37302
CHRISTOPHER B. LEMKA
04/30/2026

BURGESS & NIPLE
1230 W. WASHINGTON ST. SUITE 511
TEMPE, AZ 85288

Contact Arizona 811 Two Working Days Before You Dig
ARIZONA811 BLUE STAKE, INC.
Call 811 or Click Arizona811.com

SIGNING AND PAVEMENT MARKING
NORTHERN PARKWAY

SHEET
SM03

TRACS NO.

4:30:48 PM 5/8/2026

Projects\221991.00_TT0372\600_CADD\05_Official\Dgn_PHASE 1\Sheets\B&N\TT0372_ST_Striping_Northern_00C.dgn

F.H.W.A. REGION	STATE	PROJECT NO.	SHEET NO.	TOTAL SHEETS	RECORD DRAWING
9	AZ	TT0372	115	224	

CONSTRUCTION NOTES:

1. *ALL SIGNS MOUNTED ON POST IN PEORIA'S MAINTENANCE AREA SHALL BE PER PE-060 AND SIGNS MOUNTED ON STREETLIGHTS POLES IN PEORIA'S MAINTENANCE AREA SHALL BE PER PE-061.*

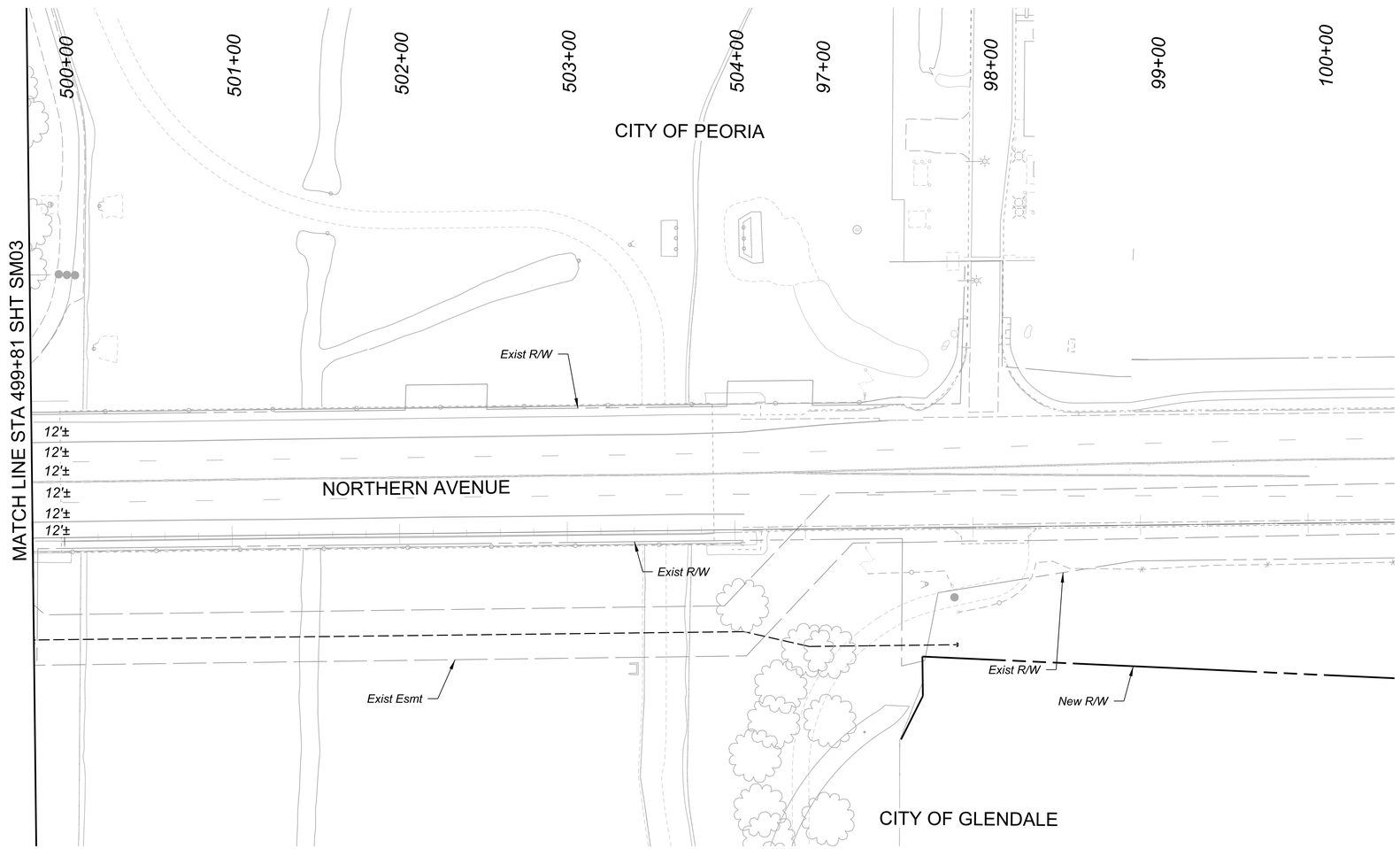

Contact Arizona 811 Two Working Days Before You Dig
Call 811 or Click Arizona811.com

NOTE:

PAVEMENT MARKING STATIONING BASED OFF OF NORTHERN AVENUE CONSTRUCTION ℄.

SCALE: Hor: 1"=40'
Vert: NA

40 0 40 80
SCALE IN FEET

NO.	REVISION	BY	DATE
3			
2			
1			

MARICOPA COUNTY

NORTHERN PARKWAY
103RD AVENUE TO 91ST AVENUE - PHASE 1
PROJECT NO. TT0372

	BY	DATE
DESIGNED	B. POE	05/2026
DRAWN	C. BURDETT	05/2026
CHECKED	J. BARR	05/2026

BRENAN POE
Date Signed 05/06/2026
ARIZONA, U.S.A.

TYLin

SIGNING AND PAVEMENT MARKING
NORTHERN AVENUE

SHEET SM04

TRACS NO.

pw://tyli-pw.bentley.com:tyli-pw-01/Documents/Projects/221991.00_TT0372/600_CADD/05_Official/Dgn_PHASE 1/Sheets/TT0372_ST_Striping_Northern.dgn $USER$ 10:39:53 AM 5/7/2026 $PENTBLS$ $PLTDRVS$

F.H.W.A. REGION	STATE	PROJECT NO.	SHEET NO.	TOTAL SHEETS	RECORD DRAWING
9	AZ	TT0372	116	224	

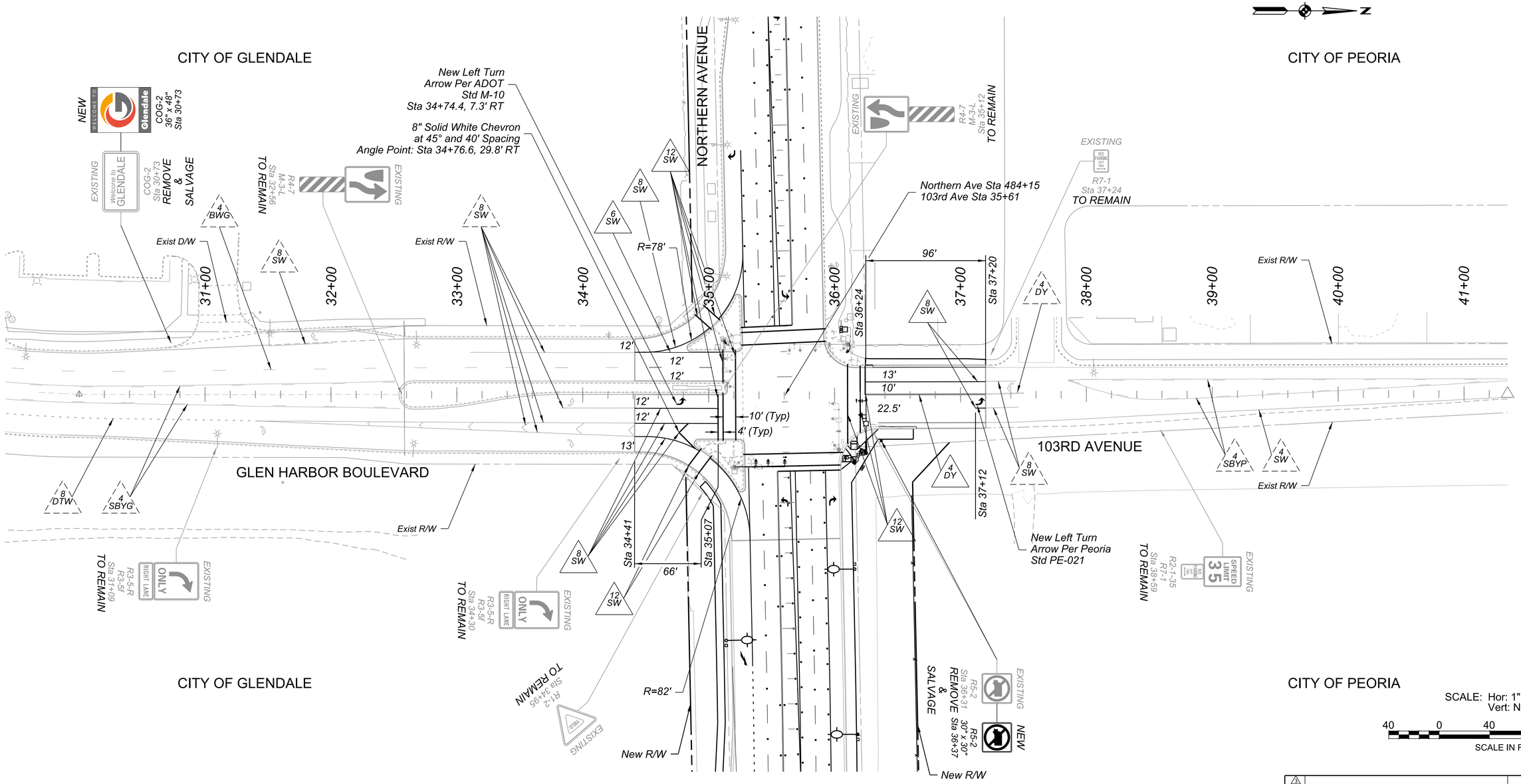

CITY OF GLENDALE

CITY OF PEORIA

SCALE: Hor: 1"=40'
Vert: NA

40 0 40 80
SCALE IN FEET

NO.	REVISION	BY	DATE
3			
2			
1			

MARICOPA COUNTY

NORTHERN PARKWAY
103RD AVENUE TO 99TH AVENUE
PROJECT NO.TT0372

	BY	DATE
DESIGNED	B. LOGAN	04/2026
DRAWN	B. LOGAN	04/2026
CHECKED	C. LEMKA	04/2026

Registered Professional Engineer (Civil) CERTIFICATE NO. 37302 CHRISTOPHER B. LEMKA ARIZONA U.S.A. 04/30/2026

BURGESS & NIPLE
1230 W. WASHINGTON ST. SUITE 511
TEMPE, AZ 85288

Contact Arizona 811 Two Working Days Before You Dig
ARIZONA811 BLUE STAKE, INC.
Call 811 or Click Arizona811.com

SIGNING AND PAVEMENT MARKING
103RD AVENUE

SHEET
SM05

TRACS NO.

4:29:52 PM 5/8/2026

Projects\221991_00_TT0372\600_CADD\05_Official\Dgn_PHASE 1\Sheets\B&N\TT0372_ST_Striping_103rd_01.dgn

F.H.W.A. REGION	STATE	PROJECT NO.	SHEET NO.	TOTAL SHEETS	RECORD DRAWING
9	AZ	TT0372	117	224	

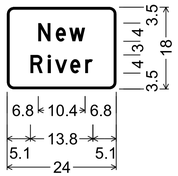

Sta 499+64
I-3 (conventional road);
1.5" Radius, 0.5" Border, White on Green;
"New", D;
"River", D;

Contact Arizona 811 Two Working Days Before You Dig
ARIZONA811 BLUE STAKE, INC.
Call 811 or Click Arizona811.com

NO.	REVISION	BY	DATE
3			
2			
1			

MARICOPA COUNTY

NORTHERN PARKWAY
103RD AVENUE TO 99TH AVENUE
PROJECT NO.TT0372

	BY	DATE
DESIGNED	B. LOGAN	04/2026
DRAWN	B. LOGAN	04/2026
CHECKED	C. LEMKA	04/2026

Registered Professional Engineer (Civil) CERTIFICATE NO. 37382 CHRISTOPHER B. LEMKA STATE OF ARIZONA 04/30/2026

BURGESS & NIPLE
1230 W. WASHINGTON ST. SUITE 511
TEMPE, AZ 85288

SIGN FORMAT

SHEET SM06

TRACS NO.

4:29:31 PM 5/8/2026

Projects\221991.00_TT0372\600_CADD\05_Official\Dgn_PHASE 1\Sheets\B&N\TT0372_ST_Sign_Format_03.dgn

F.H.W.A. REGION	STATE	PROJECT NO.	SHEET NO.	TOTAL SHEETS	RECORD DRAWING
9	AZ	TT0372	118	224	

STREET LIGHTING PLANS

NORTHERN PARKWAY
103RD AVENUE TO 91ST AVENUE - PHASE 1

PEORIA, ARIZONA
GLENDALE, ARIZONA

TRAFFIC ENGINEER

Y2K ENGINEERING, LLC
1921 S ALMA SCHOOL ROAD
SUITE 204
MESA, ARIZONA 85210

CONTACT: CHRIS WILLIAMS, PE, PTOE
PHONE: (602) 696-1701
EMAIL: CWILLIAMS@Y2KENG.COM

CITY OF PEORIA GENERAL ROADWAY LIGHTING NOTES

1. *ALL STREET LIGHTING WORK ON THIS PROJECT SHALL BE IN ACCORDANCE WITH THE CITY OF PEORIA STREET LIGHTING POLICY.*
2. *CONTRACTOR SHALL COORDINATE STREET LIGHTING WORK WITH APS. SEE APS DETAILS ON SHEET LN04 FOR ADDITIONAL INFORMATION.*
3. *POLES SHALL BE LOCATED ONE (1) FOOT BACK OF SIDEWALK OR FOUR (4) FEET BACK OF CURB WITH DETACHED SIDEWALK AND SHALL NOT BE PLACED UNTIL THE LOCATION IS INSPECTED AND APPROVED BY THE ENGINEER.*
4. *INSTALLATION AND TYPE OF EQUIPMENT, INCLUDING POLES, MAST ARMS AND FIXTURES, SHALL MEET APS REQUIREMENTS.*
5. *LUMINAIRE VOLTAGE SHALL BE COORDINATED WITH APS. ALL LUMINAIRES SHALL BE LED WITH FULL CUTOFF OPTICS AND SHALL BE IN ACCORDANCE WITH THE CITY OF PEORIA STREET LIGHTING POLICY. ANY VARIANCE TO AN APPROVED LUMINAIRE SHALL REQUIRE A NEW DESIGN ACCOMPANIED WITH POINT-TO-POINT LIGHTING CALCULATIONS TO VERIFY THAT LIGHT LEVELS HAVE MET THE DESIGN CRITERIA. APPROVAL BY THE CITY ENGINEER IS REQUIRED.*
6. *CONTRACTOR SHALL AFFIX A STREET LIGHT NUMBER ON EACH POLE ACCORDING TO THE CITY OF PEORIA. STREET LIGHT NUMBERS WILL BE ASSIGNED BY THE UTILITY COMPANY.*
7. *MATERIALS AND EQUIPMENT SHALL BE INSTALLED IN ACCORDANCE WITH THE CURRENT STANDARDS AND RECOMMENDATIONS OF THE NATIONAL ELECTRIC CODE, THE NATIONAL ELECTRICAL SAFETY CODE AND WITH LOCAL CODES THAT APPLY. WHERE DISCREPANCIES ARISE BETWEEN CODES, THE MOST RESTRICTIVE REGULATION SHALL APPLY.*
8. *ALL LUMINAIRES SHALL BE MARKED WITH THEIR LAMP WATTAGE. ("15" FOR 150 WATTS). THESE MARKINGS SHALL BE CLEARLY VISIBLE FROM THE GROUND.*
9. *A CITY OF PEORIA PERMIT SHALL BE OBTAINED PRIOR TO INSTALLATION OF STREET LIGHTS.*
10. *THE PLANS SHOW THE GENERAL PATH AND LOCATION OF CONDUIT, PULL BOXES AND ELEMENTS IN RELATION TO MAJOR PHYSICAL FEATURES AND APPROXIMATE STATIONING. THE CONTRACTOR SHALL NOTE THAT ELEMENT LOCATIONS ARE APPROXIMATE AND MAY CHANGE DURING CONSTRUCTION. THESE CHANGES MAY RESULT IN CHANGES TO STATIONING AND CONDUIT LENGTHS, ALONG WITH MINOR QUANTITY CHANGES. THE CONTRACTOR SHALL VERIFY FIELD LENGTHS BEFORE ORDERING THE ITEMS SHOWN ON THESE PLANS.*
11. *THE CONTRACTOR SHALL GUARANTEE ALL WORK FOR A PERIOD OF ONE (1) YEAR FROM THE DATE OF FINAL ACCEPTANCE BY THE STREET LIGHTING DIVISION, AGAINST DEFECTS IN WORKMANSHIP, FAILURE, MALFUNCTION OF MATERIALS AND/OR EQUIPMENT. THIS GUARANTEE SHALL BE IN WRITING.*
12. *CONTRACTOR SHALL AVOID DAMAGE TO LANDSCAPING, PAVERS, CONCRETE, ASPHALT, AND OTHER SUCH TREATMENTS. ANY DAMAGE OR DESTRUCTION AS A RESULT OF CONSTRUCTION SHALL BE RESTORED TO PREVIOUS CONDITIONS BY THE CONTRACTOR AT THE EXPENSE OF THE CONTRACTOR.*
13. *EXISTING UTILITY INFORMATION SHOWN ON THE PLANS CONCERNING THE TYPE, SIZE AND LOCATION WERE COMPILED BASED ON THE BEST UTILITY RECORDS AVAILABLE TO THE ENGINEER. THE CONTRACTOR SHALL PROVIDE A UTILITY LOCATOR AND VERIFY THE ACTUAL LOCATION OF ALL UTILITIES PRIOR TO CONSTRUCTION. THE CONTRACTOR SHALL BE RESPONSIBLE FOR PROTECTING ALL EXISTING UTILITIES IN PLACE UNLESS NOTED OR SPECIFIED OTHERWISE. ANY DAMAGE TO EXISTING UTILITIES SHALL BE REPAIRED AT THE CONTRACTORS EXPENSE.*
14. *"AS BUILT" DRAWING REQUIREMENTS SHALL CONSIST OF RECORDING, BY THE CONTRACTOR, ANY CHANGE OR DEVIATION ON A SET OF APPROVED PLANS. PLANS SHALL BE FURNISHED TO THE INSPECTOR AT THE COMPLETION OF THE PROJECT. FINAL PAYMENT SHALL NOT BE MADE UNTIL THE AS BUILT PRINTS ARE ACCEPTED BY THE CITY'S REPRESENTATIVE.*
15. *IT IS THE CONTRACTOR'S RESPONSIBILITY TO CONTACT APS FOR COORDINATION OF TRENCH REQUIREMENTS AND THE INSTALLATION OF CONDUIT.*

STREET LIGHT OWNERSHIP / MAINTENANCE

NORTHERN AVENUE - NORTH SIDE	*CITY OF PEORIA*
NORTHERN AVENUE - SOUTH SIDE	*CITY OF GLENDALE*

AS-BUILT CERTIFICATION

I HEREBY CERTIFY THAT THE "AS-BUILT" INFORMATION SHOWN HEREON WAS OBTAINED UNDER MY DIRECT SUPERVISION AND IS CORRECT AND COMPLETE TO THE BEST MY KNOWLEDGE AND BELIEF.

REGISTERED LAND SURVEYOR/ENGINEER DATE

REGISTRATION NO.

CONTRACTOR

PERMIT NO.

APPROVAL DATE

REGISTRATION NO.

NOTICE:

THE CITY OF PEORIA ASSUMES NO RESPONSIBILITY FOR THE ACCURACY OF THE "AS-BUILT" INFORMATION PROVIDED AS PUBLIC RECORD.

Released for Permitting:

This set of plans has been reviewed for compliance with City requirements prior to issuance of construction permits. The City neither accepts nor assumes any liability for errors or omissions. This compliance approval shall not prevent the City Engineer from requiring corrections or errors or omissions in plans found to be in violation of any law or ordinance.

Review	Reviewer	Date	Review	Reviewer	Date
Paving			Traffic		
G & D			Fire		
Ret. Walls			Concrete		
Water			Storm Drain		
Sewer					

For City Engineer Date

Revisions:

Rev 1
For City Engineer Date

Rev 2
For City Engineer Date

Contact Arizona 811 Two Working Days Before You Dig
Call 811 or Click Arizona811.com

NO.	REVISION	BY	DATE
3			
2			
1			

MARICOPA COUNTY

NORTHERN PARKWAY
103RD AVENUE TO 91ST AVENUE - PHASE 1
PROJECT NO. TT0372

	BY	DATE
DESIGNED	R. NEIFFER	05/2026
DRAWN	N. NEIFFER	05/2026
CHECKED	C. WILLIAMS	05/2026

Registered Professional Engineer (Civil) CERTIFICATE NO. 42636 CHRISTOPHER B. WILLIAMS Date Signed 5-5-26 ARIZONA, U.S.A.

Y2K ENGINEERING
1921 S. Alma School Rd, Suite 204
Mesa, Arizona 85210
www.y2keng.com

STREET LIGHTING
PEORIA GENERAL NOTES

SHEET LN01

TRACS NO.

12:59:03 PM 5/4/2026
pw://tyli-pw.bentley.com:tyli-pw-01/Documents/Projects/221991.00_TT0372/600_CADD/05_Official/Dgn_PHASE 1/Sheets/Y2K/TT0372_ST_Lighting_Notes_01.dgn

F.H.W.A. REGION	STATE	PROJECT NO.	SHEET NO.	TOTAL SHEETS	RECORD DRAWING
9	AZ	TT0372	119	224	

CITY OF GLENDALE GENERAL ROADWAY LIGHTING NOTES

The following information is provided to emphasize critical work and is intended to supplement the specifications. Should there be a conflict with the specifications, this document shall take precedence.

Alternatives shall be pre-approved by the Transportation Director. Approval of alternative products shall be on an equal basis with the product specified and shall be submitted a minimum of ten (10) days prior to bid opening. Structural calculations shall be furnished for alternate products and certified by a structural engineer, registered in the state of Arizona. Luminaires and lamps shall meet or exceed the photometric, electrical, and mechanical requirements for the specified products.

The designer is responsible to design new streetlight poles to match the color, style, and profile of existing nearby public streetlight poles and arms. If there are conflicts with matching the color, style, and profile of existing nearby poles and arms, this conflict shall be discussed with the city's street lighting manager or the plan reviewer for resolution. If poles and arms installed with the project do not match nearby poles and arms, the new installations will be required to be removed and replaced with poles and arms matching the nearby streetlights. The contractor shall comply with State and City statutes along with the manufacturer's recommendations.

Prior to submitting a proposal, the bidder shall examine all general construction drawings and visit the construction site to become familiar with existing conditions under which he will operate. No subsequent allowance will be made in connection with or on behalf of the contractor for any errors or negligence on his part.

Prior to ordering any materials or doing any work, the contractor shall verify dimensions at the site and immediately report any discrepancies to the Streetlight Management. The contractor shall not proceed with any work until the Transportation Director renders a decision. No extra charges or compensation will be allowed for the differences in actual dimensions and dimensions indicated on the drawings.

General Information
The electrical contractor shall comply with all licensing requirements set forth by the State Registrar of Contractors' office to perform work relating to streetlight installation in the city right-of-way.

The contractor shall obtain the following permits prior to the installation of street lighting:

- *One project underground utilities (right-of-way) permit.*
- *One street lighting permit for each installation.*
- *One electrical inspection permit for each installation.*

(See schedule for permit)

All streetlights, including service line stubouts, within new planned developments or relocation projects, must be installed, inspected by the City of Glendale and city clearances issued before the utility company will install any wiring for the distribution system.

Streetlighting As-builts Required
As with other as-builts required by the City of Glendale, the developer must submit the Arizona Public Service's street lighting electrical design showing streetlight pole locations with APS-assigned numbers. This information must be provided through both a scanned "TIFF" or "PDF" file and a paper copy (24" x 36") of a quality that allows for reproduction.

Streetlighting AutoCAD DWG Base File Required
A CD containing complete improvement base files in AutoCAD DWG format shall be submitted, including street lighting plans, at the time of City plan approval.

Light Poles
Light poles shall be installed plumb, adjusted to provide the proper alignment to the roadway being lighted and be properly grounded when the installation is complete.

If light poles are furnished by the city, the contractor shall pick up the poles from city storage and shall be responsible for their care until installed and accepted by the city (on City Projects).

Dark Skies Compliance
City of Glendale Code requires exterior LED lights of 1,100 lumens or more to use full cutoff luminaires. Please provide authoritative information showing such luminaires are full cutoff or exempt from this requirement. To demonstrate the selected luminaire is full cutoff, a manufacturer's cut/detail sheet shall be provided as part of the plan review sheets showing the fixture is "full cutoff" and/or International Dark Skies Association approved, certified as "Nighttime Friendly", or has a BUG rating showing zero uplight. This cut/detail sheet information must be provided in the plans for review and approval.

Light Emitting Diode (LED) Luminaires
The City of Glendale is using the following specifications for streetlight installations. These specifications are American Electric Lighting's Autobahn LED luminaire (typical):

1. *Residential Streets – Use 34 Watt, 4,500 lumens, 3000K CCT, 70 CRI Min. LED lighting product: ATBS P10 MVOLT R2 3K MP NL P7 RFD309346. Includes a standard 5-year warranty.*
2. *Collector Streets – Use 36 Watt, 4,800 lumens, 3000K CCT, 70 CRI Min. LED lighting product: ATBS P10 MVOLT R2 3K MP NL P7 RFD309347. Includes a standard 5-year warranty.*
3. *Arterial Streets – Use 84 Watt, 11,600 lumens, 3,000K CCT, 70 CRI Min. LED lighting product: ATBM P10 MVOLT R2 3K MP NL P7 RFD308954. Includes a standard 5-year warranty.*

Luminaires shall be installed level and shall include a lamp and photocell. Contractor shall assure that the luminaires are free of dust, dirt or any other substance, which would impair the output of the light prior to leaving the site.

Luminaires furnished with multi-tap ballast shall be rewired or reconnected to match the voltage supplied by the electric utility company.

If luminaires are furnished by the city and supplied from stock with a lamp and photocell each may be furnished in separate cartons and assembled by the contractor. The contractor shall pick up the products from city storage and shall be responsible for their care until installed and accepted by the city. If a product furnished by the city is defective, it shall be replaced at no expense to the contractor. Products damaged or rendered non-working by the contractor shall be replaced at the contractor's expense (on city projects).

Photocell
The City of Glendale is using the following specification for new photocells standard for new developments with all public streetlights: Acuity Controls DTL DLL Elite Electronic Locking Type Photocontrol – DLL127 (for 120-277v), Fail On (blank), 1.5 ANSI Std, Standard Housing (blank), Filter Silicon Sensor (blank), Certification CUL, Cover Color Blue, JU (1 unit).

Foundation or Embedment and Setback
Standard Minimum Street Light Pole Setbacks

Arterial streets – Centered six feet from back of curb where there is a detached sidewalk or no sidewalk or one foot from back of sidewalk where there is an attached sidewalk.

Collector and residential streets – Centered three feet from back of curb where there is a detached sidewalk or no sidewalk or one foot back of sidewalk where there is an attached sidewalk.

Where there are utility conflicts, deviations may be allowed with approval of the Street Lighting Program. Street light pole setback along arterial streets shall not be less than three feet back of curb.

Fire Hydrant Clearance
International Fire Code requires a three-foot clear space around fire hydrants.

Foundations
Concrete foundations shall follow the specifications provided in detail F-1 (see sheet LT09). The hole for the foundation shall be augured or hand dug, any exception shall be pre-approved by the City's Streetlight Management Section. Anchor bolts installed in foundations shall be provided with double nuts and washers. Anchor bolts will be set in place and supported by the use of a template (supplied by the contractor) to maintain the true bolt circle before the concrete is poured. See Street Lighting Details on Sheet LT09.

Streetlight Management shall inspect the work before the concrete is poured and must be contacted 48 hours before the scheduled pouring. A ground rod shall be installed in the pull box or next to the excavated hole in undisturbed soil, per the utility company requirement. A lead-in copper bond wire (#6) shall be installed in a separate 1" conduit up through the excavation for pole grounding.

The top of the completed foundation shall be six (6) inches above finished grade, trowel finished and level. Any surplus excavation shall be legally disposed of by the contractor.

Embedment
Direct buried poles shall be set in a round hole, twelve (12) inch diameter, augured into undisturbed earth. Poles shall be set plumb in two directions 90 degrees apart.

Hand tamping of native soil with pneumatic or vibrating equipment is the acceptable method of compaction. Backfill shall be compacted to 85% of maximum density as determined by ASTM D698, D-2922 and D-3017. Using a backhoe is strictly prohibited for direct bury poles. Surplus excavation materials shall be legally disposed of by the contractor.

Wiring
Arizona Public Service Service Area
Streetlight poles shall be wired for 120 volt in APS area.

Wiring from the transformer to the pole's flush mounted J-box shall consist of either 1-#6AL XLPE TX or 1-#4/OAL XLPE TX. Wiring from the J-box to the base of the pole or the pole's hand hole shall consist of 2-#6 AL XLPE and 1-#6 bare solid copper (bond). Wiring shall consist of 2-#12 single conductor and 1-#12 single conductor (bond) type XHHW or THWN pulled from the pole's hand hole or the base of the pole to the luminaire. Wire color for power shall be properly identified. Wiring between underground junction boxes, shall be provided and installed by the utility company supplying power. Connections in the J-box will be made by APS.

APS Junction Boxes
Junction boxes are not furnished by APS. The contractor shall install all APS junction boxes. Excavation for junction boxes and material specifications shall be per the utility company standards.

Grounding
Each pole foundation shall have an 8' X 5/8" copper clad ground rod, driven outside the area excavated for the pole. Ground rods maybe located in the J-box when required by the utility company. A #6 bare copper lead shall be used between the ground rod and the landing lug.

Trench
Trench shall be installed per the utility company standards.

The use of a common electric utility company trench is permitted. It is the contractor's responsibility to contact the utility company for coordination of trench and the installation of conduit.

Conduit
Conduit shall be installed at the depth specified on the plans. Conduit shall be per the utility company requirement. Each conduit shall terminate in each pull box and/or pole foundation. Elbows shall be the same size as the conduit.

All conduit which will not have circuit wire or cable pulled into it during construction shall have a #10 AWG. copper clad or aluminum clad pull wire installed in it and the ends sealed in a NEC approved manner to keep all moisture and foreign matter out of the conduit.

When required, the contractor shall encase conduits in concrete at street, railroad, and driveway crossings.

Concrete foundations require a rigid (inflexible) PVC conduit. Direct bury/embedded poles require flexible conduit.

Connections
Arizona Public Service (APS) Service Area
Cable connection in the hand holes or bases of light poles shall be accomplished by the use of factory pre-assembled cable connector kits. A kit utilizing a 10 amp KTK-R fuse on the hot leg of the circuit shall be employed and shall be a quick disconnect type. Fuse kits shall be installed so that the exposed end shall be free of energized parts when disconnected.

Splices in the junction boxes shall be prohibited. Connections shall be made using the 2 or 4 molder rubber insulated set screw bar connectors per the utility company's requirements. Split bolt connector and wire nut type devices are prohibited in all splices.

NEC approved grounding clamps connections shall be used for bonding bare bond wire and for connection to ground rods.

Light Pole Identification
The contractor shall furnish and install a number on each light pole. Streetlight pole identification and specifications will be provided by the utility company supplying power. The contractor will coordinate the installation of pole numbers with the utility company. Pole numbers will be on the plans provided by the utility company. Pole identification shall be yellow letters/numbers on black background, two inches (2") high.

Energization of New Streetlights
The city street lighting program (623-930-2019) shall be notified when the contractor arranges for any street lights to be energized by the electric company (APS).

Inspections
The City of Glendale Inspection Management section shall be contacted 48 hours prior to starting the work of digging or installing street lights. Notify street light inspections at 623-930-3626. Construction work concealed without inspection by the city shall be subject to exposure and/or removal and replacement at the contractor's expense. A geotechnical engineer's report will be required if direct bury poles are installed without inspector involvement.

Landscaping
Trees with branches which may grow at maturity to block the light coming from a street light fixture shall not be planted near a street light pole. Such trees shall be removed from the plans or placed a minimum of 25 feet from the pole. Show street light locations on landscape plans with 25-foot clear zone (parallel to the right of way primarily).

Removal of Existing Streetlight
When an existing street light is removed, the pole, arm, luminaire, and photocontrol shall be delivered to the City of Glendale warehouse located at the city's Field Operations yard, 6210 W. Myrtle, Bldg. N. This material shall be protected for re-use.

No direct bury street light poles are to be relocated due to rust potential which may not be known until pole removal.

Foundation-mounted poles may be relocated under city observation. Such poles need to be lifted by the pole with a stabilizing strap attached to the luminaire-end of the arm to prevent the arm from swinging as the pole rotates in mid-air. The strap must be secured from the ground. The arm swing makes the luminaire or arm subject to striking the crane or other object risking damage.

Jackhammer out the top 12" of the existing foundation that will be abandoned.

Restoration
It is the contractor's responsibility to restore all property, landscaping, paving, and driveways that are disturbed during streetlight construction to their original condition in conformance with Maricopa Association of Governments Specifications, Section 107.9.

Performance
Prior to acceptance, the contractor shall energize and operate the entire roadway lighting system, from sunset to sunrise for two (2) consecutive days without interruption or failure. If a luminaire fails to operate normally, it shall be replaced immediately and retested.

Final Acceptance by City
The City of Glendale staff shall perform visual inspection of work progress. Final acceptance of any street light shall be based on inspection. A problem identified within this period shall result in contractor notification for repair.

Warranty
The contractor shall guarantee all work for a period of one (1) year from the date of final acceptance by the Streetlight Management, against defects in workmanship, failure, malfunction of materials and/or equipment. This guarantee is to be in writing to the City at the time of issuing final acceptance. Work found to be defective within the warranty period shall be replaced without cost to the city.

Street Lighting Specifications
City of Glendale specification sheets for poles, arms, luminaires, and concrete foundations are available at:
https://www.glendaleaz.com/cms/one.aspx?portalId=15209085&pageId=15590882

Cell Tower Identification Tag
Each cell tower installation shall have a one-inch by three-inch aluminum tag installed on the outside face of the pole opposite from the hand hole one foot above the hand hole. The tag shall be attached by rivets at each end and provide by etching the owner's name and the job number reference that will be recognizable by the owner in the future.

Cell Tower Re-use of Existing Material
Each cell tower installation may re-use the existing mast arm where appropriate and approved by the city. The existing luminaire with photocell shall be re-used by moving this equipment to the newly installed cell tower pole. City equipment shall be protected for re-use.

Cell Tower Disposal of Abandoned City Equipment
Abandoned city equipment such as the old pole or mast arm (if not being re-used) shall be delivered to the City of Glendale warehouse located at the city's Field Operations yard, 6210 W. Myrtle, Bldg. N. This material shall be protected for re-use.

STREET LIGHT OWNERSHIP / MAINTENANCE

NORTHERN AVENUE - NORTH SIDE	*CITY OF PEORIA*
NORTHERN AVENUE - SOUTH SIDE	*CITY OF GLENDALE*

Contact Arizona 811 Two Working Days Before You Dig
Call 811 or Click Arizona811.com

NO.	REVISION	BY	DATE
3			
2			
1			

MARICOPA COUNTY

NORTHERN PARKWAY
103RD AVENUE TO 91ST AVENUE - PHASE 1
PROJECT NO. TT0372

	BY	DATE
DESIGNED	R. NEIFFER	05/2026
DRAWN	N. NEIFFER	05/2026
CHECKED	C. WILLIAMS	05/2026

REGISTERED PROFESSIONAL ENGINEER (CIVIL) 42636 CHRISTOPHER B. WILLIAMS 5-5-26 Date Signed ARIZONA, U.S.A.

Y2K ENGINEERING
1921 S. Alma School Rd, Suite 204
Mesa, Arizona 85210
www.y2keng.com

STREET LIGHTING
GLENDALE GENERAL NOTES

SHEET LN02

TRACS NO.

pw://tyli-pw.bentley.com:tyli-pw-01/Documents/Projects/221991.00_TT0372/600_CADD/05_Official/Dgn_PHASE 1/Sheets/Y2K/TT0372_ST_Lighting_Notes_02.dgn 12:59:09 PM 5/4/2026

F.H.W.A. REGION	STATE	PROJECT NO.	SHEET NO.	TOTAL SHEETS	RECORD DRAWING
9	AZ	TT0372	120	224	

MCDOT GENERAL ROADWAY LIGHTING NOTES

1. *The location of utilities, roadway lighting features (poles, luminaires, pull boxes and conduit) are approximate. The Contractor shall be responsible, per Section 730-6 of the Standard Specifications, for contacting all utilities (including MCDOT, Peoria, and Glendale) for exact locations prior to any construction activity. The Contractor is responsible for maintaining proper clearances as required by the utility company. The Contractor is responsible for contacting "Blue Stake" for verification of underground utility locations.*

2. *All poles shall be ADOT Standard Poles in accordance with ADOT Standard Drawings. The pole foundation shall be in accordance with ADOT standards. Luminaires shall be 240 volt LED type in accordance with the project specifications.*

3. *Each horizontally or vertically pole mounted luminaire shall be individually fused with in-line connectors in the nearest adjacent pull box.*

4. *All poles over 40 feet tall shall include a cable hook with cable grips to support the conductors feeding the luminaire. The cost of the cable hook and grip shall be incidental to the pole item. The cable hook shall be shown on the material submittals for the light poles.*

5. *Once installed, all luminaires shall be energized for 100 hours before final acceptance in accordance with Section 732-3.02 of the ADOT Standard Specifications. The Contractor shall be responsible for correcting any problems for six months after the luminaires pass a final inspection. The Contractor shall provide a name and telephone number to the Engineer of a contact person MCDOT can call after the job is completed.*

6. *Lighting conduit that is bored under existing pavement may be HDPE Schedule 80 conduit. All other lighting conduits shall be Schedule 40 PVC, unless noted otherwise on the plans.*

7. *Existing conduit labeled for abandonment shall have the conductors removed from the conduit.*

8. *All electrical service requirements and connections shall be coordinated through SRP at (602) 236-8888 and APS at (602) 361-7817.*

9. *All pole foundation locations shall be inspected and approved by MCDOT prior to placement of concrete.*

10. *Contractor shall perform a ground resistance test for each installed ground rod and pole foundation grounding coil in accordance with Subsection 732-3.03 of the ADOT Standard Specifications.*

11. *All high mast luminaires shall be installed in the beam angle parallel to the Northern Parkway centerline.*

12. *No. 5 pull boxes shall be heavy duty in accordance with the applicable requirements of the Society of Cable Telecommunications Engineer (SCTE) Specifications for underground enclosure integrity, ANSI/SCTE 77 2010, Tier 22 load rating. The box and lid shall be cast iron, steel, or steel hammer plate imbedded polymer concrete, and shall meet the ANSI/SCTE 77 2010, Tier 15 load rating lids shall use four 1/2-inch-13 UNC stainless steel pentahead bolts with washers to bolt down.*

13. *The Contractor shall furnish and install a number on each light pole based on the plan number. Two inch high, die cut, reflectorized, yellow on black letters shall be used.*

Contact Arizona 811 Two Working Days Before You Dig
Call 811 or Click Arizona811.com

NO.	REVISION	BY	DATE
3			
2			
1			

MARICOPA COUNTY

NORTHERN PARKWAY
103RD AVENUE TO 91ST AVENUE - PHASE 1
PROJECT NO. TT0372

	BY	DATE
DESIGNED	R. NEIFFER	05/2026
DRAWN	N. NEIFFER	05/2026
CHECKED	C. WILLIAMS	05/2026

Registered Professional Engineer (Civil) CERTIFICATE NO. 42636 CHRISTOPHER B. WILLIAMS Date Signed 5-5-26 ARIZONA, U.S.A.

Y2K ENGINEERING
1921 S. Alma School Rd, Suite 204
Mesa, Arizona 85210
www.y2keng.com

STREET LIGHTING
ADOT & MCDOT GENERAL LIGHTING NOTES

SHEET LN03

TRACS NO.

pw://tyli-pw.bentley.com:tyli-pw-01/Documents/Projects/221991.00_TT0372/600_CADD/05_Official/Dgn_PHASE 1/Sheets/Y2K/TT0372_ST_Lighting_Notes_03.dgn 12:59:17 PM 5/4/2026

F.H.W.A. REGION	STATE	PROJECT NO.	SHEET NO.	TOTAL SHEETS	RECORD DRAWING
9	AZ	TT0372	121	224	

APS GENERAL ROADWAY LIGHTING NOTES *(WEST OF NEW RIVER)*

The following information is provided to emphasize critical work and is intended to supplement the specifications. Should there be a conflict with the specifications, this document shall take precedence.

Alternatives shall be pre-approved by the Transportation Director. Approval of alternative products shall be on an equal basis with the product specified and shall be submitted a minimum of ten (10) days prior to bid opening. Structural calculations shall be furnished for alternate products and certified by a structural engineer, registered in the state of Arizona. Luminaires and lamps shall meet or exceed the photometric, electrical, and mechanical requirements for the specified products.

The designer is responsible to design new streetlight poles to match the color, style, and profile of existing nearby public streetlight poles and arms. If there are conflicts with matching the color, style, and profile of existing nearby poles and arms, this conflict shall be discussed with the city's street lighting manager or the plan reviewer for resolution. If poles and arms installed with the project do not match nearby poles and arms, the new installations will be required to be removed and replaced with poles and arms matching the nearby streetlights.
The contractor shall comply with State and City statutes along with the manufacturer's recommendations.

Prior to submitting a proposal, the bidder shall examine all general construction drawings and visit the construction site to become familiar with existing conditions under which he will operate. No subsequent allowance will be made in connection with or on behalf of the contractor for any errors or negligence on his part.

Prior to ordering any materials or doing any work, the contractor shall verify dimensions at the site and immediately report any discrepancies to the Streetlight Management. The contractor shall not proceed with any work until the Transportation Director renders a decision. No extra charges or compensation will be allowed for the differences in actual dimensions and dimensions indicated on the drawings.

General Information
The electrical contractor shall comply with all licensing requirements set forth by the State Registrar of Contractors' office to perform work relating to streetlight installation in the city right-of-way.

The contractor shall obtain the following permits prior to the installation of street lighting:

- *One project underground utilities (right-of-way) permit.*
- *One street lighting permit for each installation.*
- *One electrical inspection permit for each installation.*

(See schedule for permit)

All streetlights, including service line stubouts, within new planned developments or relocation projects, must be installed, inspected by the City of Glendale and city clearances issued before the utility company will install any wiring for the distribution system.

Streetlighting As-builts Required
As with other as-builts required by the City of Glendale, the developer must submit the Arizona Public Service's street lighting electrical design showing streetlight pole locations with APS-assigned numbers. This information must be provided through both a scanned "TIF"or "PDF"file and a paper copy (24"x 36") of a quality that allows for reproduction.

Streetlighting AutoCAD DWG Base File Required
A CD containing complete improvement base files in AutoCAD DWG format shall be submitted, including street lighting plans, at the time of City plan approval.

Light Poles
Light poles shall be installed plumb, adjusted to provide the proper alignment to the roadway being lighted and be properly grounded when the installation is complete.

If light poles are furnished by the city, the contractor shall pick up the poles from city storage and shall be responsible for their care until installed and accepted by the city (on City Projects).

Dark Skies Compliance
City of Glendale Code requires exterior LED lights of 1,100 lumens or more to use full cutoff luminaires. Please provide authoritative information showing such luminaires are full cutoff or exempt from this requirement. To demonstrate the selected luminaire is full cutoff, a manufacturer's cut/detail sheet shall be provided as part of the plan review sheets showing the fixture is "full cutoff" and/or International Dark Skies Association approved certified as "Nighttime Friendly", or has a BUG rating showing zero uplight. This cut/detail sheet information must be provided in the plans for review and approval.

Light Emitting Diode (LED) Luminaires (List only the luminaires required for specific projects.)
The City of Glendale is using the following specifications for streetlight installations. These specifications are American Electric Lighting's Autobahn LED luminaire (typical):

1. *Residential Streets Use 34 Watt, 4,500 lumens, 3000K CCT, 70 CRI Min. LED lighting product: ATBM P10 MVOLT R2 3K MP NL P7 RFD309346. Includes a standard 5-year warranty.*

2. *Collector Streets Use 36 Watt, 4,800 lumens, 3000K CCT, 70 CRI Min. LED lighting product: ATBM P10 MVOLT R2 3K MP NL P7 RFD309347. Includes a standard 5-year warranty.*

3. *Arterial Streets Use 135 Watt, 17,400 lumens, 3,000K CCT, 70 CRI Min. LED lighting product: ATBM P40 MVOLT R3 3K MP NL P7. Includes a standard 5-year warranty.*

Luminaires shall be installed level and shall include a lamp and photocell. Contractor shall assure that the luminaires are free of dust, dirt or any other substance, which would impair the output of the light prior to leaving the site.

Luminaires furnished with multi-tap ballast shall be rewired or reconnected to match the voltage supplied by the electric utilicompany.

Photocell
The City of Glendale is using the following specification for new photocells standard for new developments with all public streetlights:
Acuity Controls DTL DLL Elite Electronic Locking Type Photocontrol DLL127 (for 120-277v), Fail On (blank), 1.5 ANSI Std, Standard Housing (blank), Filter Silicon Sensor (blank), Certification CUL, Cover Color Blue, JU (1 unit).

Foundation or Embedment and Setback

Standard Minimum Street Light Pole Setbacks

Arterial streets Centered six feet from back of curb where there is a detached sidewalk or no sidewalk or one foot from back of sidewalk where there is an attached sidewalk.

Collector and residential streets Centered three feet from back of curb where there is a detached sidewalk or no sidewalk or one foot back of sidewalk where there is an attached sidewalk.

Where there are utility conflicts, deviations may be allowed with approval of the Street Lighting Program. Street light pole setback along arterial streets shall not be less than three feet back of curb.

Fire Hydrant Clearance

International Fire Code requires a three-foot clear space around fire hydrants.

Foundations
Concrete foundations shall follow the specifications provided in detail F-1 (see Sheet LT09). The hole for the foundation shall be augured or hand dug, any exception shall be pre-approved by the City's Streetlight Management Section. Anchor bolts installed in foundations shall be provided with double nuts and washers. Anchor bolts will be set in place and supported by the use of a template (supplied by the contractor) to maintain the true bolt circle before the concrete is poured.

Streetlight Management shall inspect the work before the concrete is poured and must be contacted 48 hours before the scheduled pouring. A ground rod shall be installed in the pull box or next to the excavated hole in undisturbed soil, per the utility company requirement. A lead-in copper bond wire (#6) shall be installed in a separate 1" conduit up through the excavation for pole grounding.

The top of the completed foundation shall be six (6) inches above finished grade, trowel finished and level. Any surplus excavation shall be legally disposed of by the contractor.

Embedment
Direct buried poles shall be set in a round hole, twelve (12) inch diameter, augured into undisturbed earth. Poles shall be set plumb in two directions 90 degrees apart.

Hand tamping of native soil with pneumatic or vibrating equipment is the acceptable method of compaction. Backfill shall be compacted to 85% of maximum density as determined by ASTM D698, D-2922 and D-3017. Using a backhoe is strictly prohibited for direct bury poles. Surplus excavation materials shall be legally disposed of by the contractor.

Wiring

Arizona Public Service Area:
Streetlight poles shall be wired for 120 volts, for up to and including 35 watts LED and 100 watts HPS fixtures. Fixtures over 35 watts LED and 100 watts HPS are to be wired 240 volts. APS can provide 277 volts on some commercial projects. It is the contractor's responsibility to contact APS for the correct voltage to be supplied.

Wiring for fixtures shall be installed per Arizona Public Service requirements. Wiring color for power shall be properly identified. Conductors are to be installed from ballast of luminaire to J- box. Wiring between underground junction boxes, shall be provided and installed by the utility company supplying power. APS will make the connection in the J-box.

APS Junction Boxes
Junction boxes are furnished by APS. The contractor shall install all APS junction boxes. Excavation for junction boxes and material specifications shall be per the utility company standards.

Grounding
Each pole foundation shall have an 8' X 5/8" copper clad ground rod, driven outside the area excavated for the pole. Ground rods maybe located in the J-box when required by the utility company. A #6 bare copper lead shall be used between the ground rod and the landing lug.

Trench
Trench shall be installed per the utility company standards.

The use of a common electric utility company trench is permitted. It is the contractor's responsibility to contact the utility company for coordination of trench and the installation of conduit.

Conduit
Conduit shall be installed at the depth specified on the plans. Conduit shall be per the utility company requirement. Each conduit shall terminate in each pull box and/or pole foundation. Elbows shall be the same size as the conduit.

All conduit which will not have circuit wire or cable pulled into it during construction shall have a #10 AWG. copper clad or aluminum clad pull wire installed in it and the ends sealed in a NEC approved manner to keep all moisture and foreign matter out of the conduit.

When required, the contractor shall encase conduits in concrete at street, railroad, and driveway crossings.

Concrete foundations require a rigid (inflexible) PVC conduit. Direct bury/embedded poles require flexible conduit.

Connections

Arizona Public Service (APS) Service Area
Fusing is to be located in the hand holes or bases of light poles. J-box fusing shall meet APS requirements. Quick disconnect type fuse holders shall be equal to or better than Bussman BK/HEB-AA 30 amp, 600 volt that will accept the 10-amp Thon time-delay fuses "FNQ 10", This cartridge fuse size is 13/32" X 1 ½".

Fusing is to be installed on each energized conductor of the circuit. Fuse holder shall be installed so that the exposed end shall be free of energized parts when disconnected. APS to make the connection in the J-box to its distribution system after city clearances have been issued. NEC approved grounding clamps or Cadweld fusion bonded connections shall be used for bonding bare bond wire and for connections to ground rods.

Light Pole Identification
The contractor shall furnish and install a number on each light pole. Streetlight pole identification and specifications will be provided by the utility company supplying power. The contractor will coordinate the installation of pole numbers with the utility company. Pole numbers will be on the plans provided by the utility company. Pole identification shall be yellow letters/numbers on black background, two inches (2") high.

Energization of New Streetlights
The city street lighting program (623-930-2019) shall be notified when the contractor arranges for any street lights to be energized by the electric company (APS).

Inspections
The City of Glendale Inspection Management section shall be contacted 48 hours prior to starting the work of digging or installing street lights. Notify street light inspections at 623-930-3626. Construction work concealed without inspection by the city shall be subject to exposure and/or removal and replacement at the contractor's expense. A geotechnical engineer's report will be required if direct bury poles are installed without inspector involvement.

Landscaping
Trees with branches which may grow at maturity to block the light coming from a street light fixture shall not be planted near a street light pole. Such trees shall be removed from the plans or placed a minimum of 25 feet from the pole. Show street light locations on landscape plans with 25-foot clear zone (parallel to the right of way primarily).

Removal of Existing Streetlight
When an existing street light is removed, the pole, arm, luminaire, and photocontrol shall be delivered to the City of Glendale warehouse located at the city's Field Operations yard, 6210 W. Myrtle, Bldg. N. This material shall be protected for re-use.

No direct bury street light poles are to be relocated due to rust potential which may not be known until pole removal.

Contact Arizona 811 Two Working Days Before You Dig
ARIZONA811 BLUE STAKE, INC.
Call 811 or Click Arizona811.com

NO.	REVISION	BY	DATE
3			
2			
1			

MARICOPA COUNTY

NORTHERN PARKWAY
103RD AVENUE TO 91ST AVENUE - PHASE 1
PROJECT NO. TT0372

	BY	DATE
DESIGNED	R. NEIFFER	05/2026
DRAWN	N. NEIFFER	05/2026
CHECKED	C. WILLIAMS	05/2026

Registered Professional Engineer (Civil) CERTIFICATE NO. 42636 CHRISTOPHER B. WILLIAMS Date Signed 5-5-26 ARIZONA, U.S.A.

Y2K ENGINEERING
1921 S. Alma School Rd, Suite 204
Mesa, Arizona 85210
www.y2keng.com

STREET LIGHTING
APS GENERAL LIGHTING NOTES

SHEET LN04

TRACS NO.

pw://tyli-pw.bentley.com:tyli-pw-01/Documents/Projects/221991.00_TT0372/600_CADD/05_Official/Dgn_PHASE 1/Sheets/Y2K/TT0372_ST_Lighting_Notes_04.dgn 12:59:23 PM 5/4/2026

F.H.W.A. REGION	STATE	PROJECT NO.	SHEET NO.	TOTAL SHEETS	RECORD DRAWING
9	AZ	TT0372	122	224	

APS GENERAL ROADWAY LIGHTING NOTES CONTINUED

Foundation-mounted poles may be relocated under city observation. Such poles need to be lifted by the pole with a stabilizing strap attached to the luminaire-end of the arm to prevent the arm from swinging as the pole rotates in mid-air. The strap must be secured from the ground. The arm swing makes the luminaire or arm subject to striking the crane or other object risking damage.

Jackhammer out the top 12" of the existing foundation that will be abandoned.

Restoration
It is the contractor's responsibility to restore all property, landscaping, paving, and driveways that are disturbed during streetlight construction to their original condition in conformance with Maricopa Association of Governments Specifications, Section 107.9.

Performance
Prior to acceptance, the contractor shall energize and operate the entire roadway lighting system, from sunset to sunrise for two (2) consecutive days without interruption or failure. If a luminaire fails to operate normally, it shall be replaced immediately and retested.

Pole Locations and Numbers to be provided to the City
The contractor shall provide an electronic list in an Excel format of GPS coordinates and utility-assigned pole numbers for each new pole that will be maintained by the City. This information shall be provided to the City Engineering Inspector or new email address with website before final acceptance of the project by the City.

Final Acceptance by City
The City of Glendale staff shall perform visual inspection of work progress. Final acceptance of any street light shall be based on inspection. A problem identified within this period shall result in contractor notification for repair.

Warranty
The contractor shall guarantee all work for a period of one (1) year from the date of final acceptance by the Streetlight Management, against defects in workmanship, failure, malfunction of materials and/or equipment. This guarantee is to be in writing to the City at the time of issuing final acceptance. Work found to be defective within the warranty period shall be replaced without cost to the city.

Street Lighting Specifications
City of Glendale specification sheets for poles, arms, luminaires, and concrete foundations are available at: https://www.glendaleaz.com/cms/one.aspx?portalId=15209085&pageId=15590882

Cell Tower Identification Tag
Each cell tower installation shall have a one-inch by three-inch aluminum tag installed on the outside face of the pole opposite from the hand hole one foot above the hand hole. The tag shall be attached by rivets at each end and provide by etching the owner's name and the job number reference that will be recognizable by the owner in the future.

Cell Tower Re-use of Existing Material
Each cell tower installation may re-use the existing mast arm where appropriate and approved by the city. The existing luminaire with photocell shall be re-used by moving this equipment to the newly installed cell tower pole. City equipment shall be protected for re-use.

Cell Tower Disposal of Abandoned City Equipment
Abandoned city equipment such as the old pole or mast arm (if not being re-used) shall be delivered to the City of Glendale warehouse located at the city's Field Operations yard, 6210 W. Myrtle, Bldg. N. This material shall be protected for re-use.

Contact Arizona 811 Two Working Days Before You Dig
Call 811 or Click Arizona811.com

NO.	REVISION	BY	DATE
3			
2			
1			

MARICOPA COUNTY

NORTHERN PARKWAY
103RD AVENUE TO 91ST AVENUE - PHASE 1
PROJECT NO. TT0372

	BY	DATE
DESIGNED	R. NEIFFER	05/2026
DRAWN	N. NEIFFER	05/2026
CHECKED	C. WILLIAMS	05/2026

Registered Professional Engineer (Civil) CERTIFICATE NO. 42636 CHRISTOPHER B. WILLIAMS Date Signed 5-5-26 ARIZONA, U.S.A.

Y2K ENGINEERING
1921 S. Alma School Rd, Suite 204
Mesa, Arizona 85210
www.y2keng.com

STREET LIGHTING
APS GENERAL LIGHTING NOTES

SHEET LN05

TRACS NO.

pw://tyli-pw.bentley.com:tyli-pw-01/Documents/Projects/221991.00_TT0372/600_CADD/05_Official/Dgn_PHASE 1/Sheets/Y2K/TT0372_ST_Lighting_Notes_05.dgn 12:59:30 PM 5/4/2026

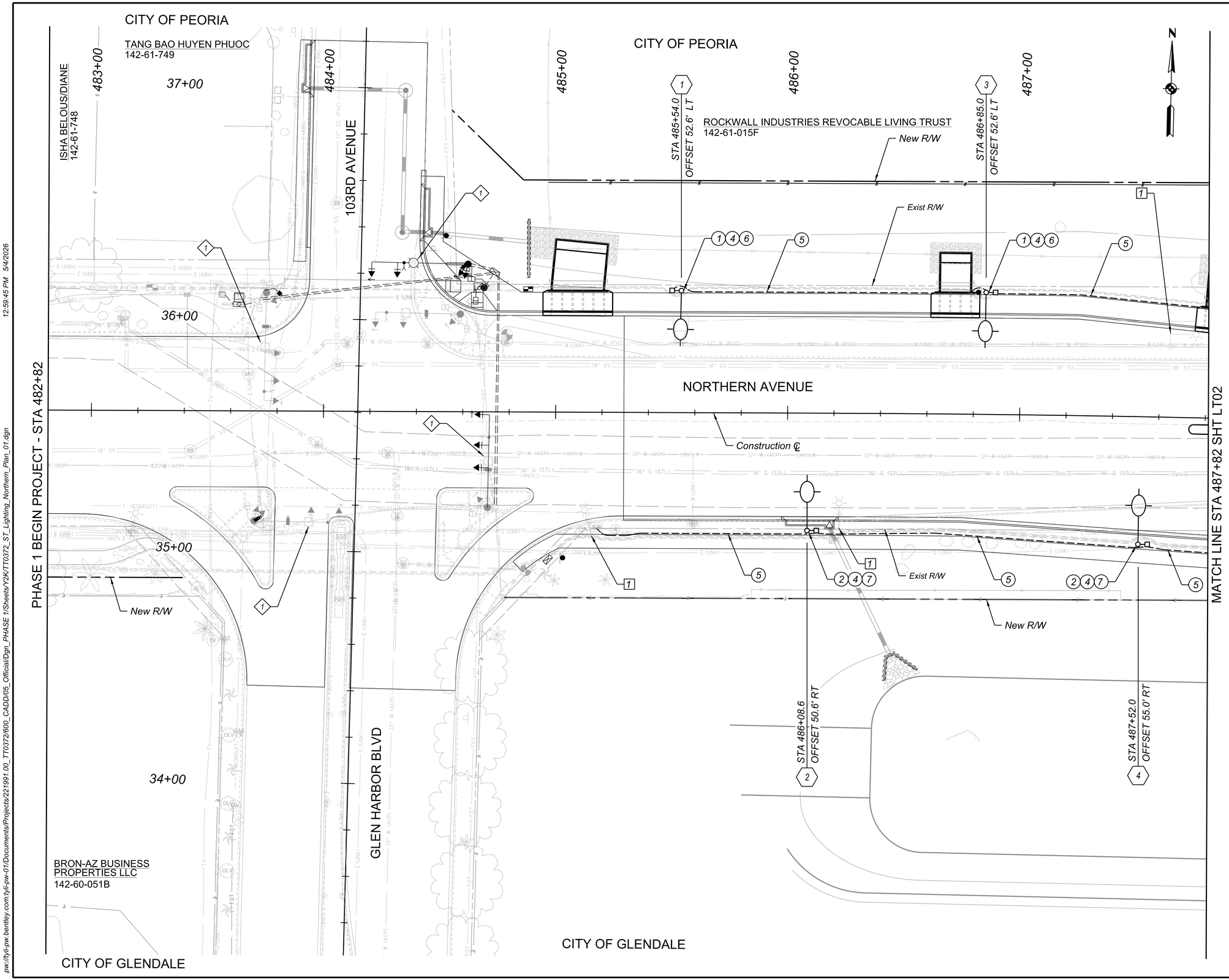

F.H.W.A. REGION	STATE	PROJECT NO.	SHEET NO.	TOTAL SHEETS	RECORD DRAWING
9	AZ	TT0372	123	224	

REMOVAL / RELOCATE

1 Remove existing Luminaire, Mast Arm, and foundation — 3 EA

CONSTRUCTION

XXX Street Light Pole Number, see Pole Schedule LT06

1 Furnish and Install Peoria Street Light Pole on a Foundation
- ADOT Type G Pole (Det T-SL 4.07) — 2 EA
- 18' Mast Arm (Det T-SL 4.29) — 2 EA
- Foundation (PE-150-1 and PE-150-2) — 2 EA
- GE Evove LED Luminaire, 15,300 Lumens (ERL2-0-16-C5-30-A-GRAY) w/ PEC — 2 EA

2 Furnish and Install Glendale Street Light Pole on a Foundation
- Glendale 22' P1 Pole (Det P1) — 2 EA
- Glendale 12'x8' Mast Arm (Det A6) — 2 EA
- Foundation and Grounding (Det F-1) — 2 EA
- Autobahn ATBM LED Luminaire 10,636 Lumens (ATBM- P10-MVOLT-R2--3K-MP-NL-P7-RFD308954) w/ PEC — 2 EA

4 Install APS Approved No. 5 Pull Box, Det T.S. 1-1 — 4 EA

5 Install 2 1/2" Sch 40 PVC Conduit between Street Light Pull Boxes — 500 LF

6 Install 2" Sch 40 PVC Conduit from Street Light to Pull box
- (2) #12 AWG Conductors
- (1) #12 Insulated XHHW Bond Conductor — 20 LF

7 Install 1" Sch 40 PVC Conduit from Street Light to Pull box
- (2) #12 AWG Conductors (THHN/THWN)
- (1) #12 Bare Bond Conductor — 20 LF

NOTE: LT conduit shown schematically. See Joint Trench Details for on sheet IC06 for ITS and Street Lighting Conduit Trenching and construction notes.

BY OTHERS

1 See Traffic Signal Plan for Luminaire Information

SCALE: Hor: 1"=20'
Vert: NA

20 0 20 40
SCALE IN FEET

Contact Arizona 811 Two Working Days Before You Dig
Call 811 or Click Arizona811.com

NO.	REVISION	BY	DATE
3			
2			
1			

MARICOPA COUNTY

NORTHERN PARKWAY
103RD AVENUE TO 91ST AVENUE - PHASE 1
PROJECT NO. TT0372

	BY	DATE
DESIGNED	R. NEIFFER	05/2026
DRAWN	N. NEIFFER	05/2026
CHECKED	C. WILLIAMS	05/2026

Registered Professional Engineer (Civil) CERTIFICATE NO. 42636 CHRISTOPHER B. WILLIAMS Date Signed 5-5-26 ARIZONA, U.S.A.

Y2K ENGINEERING
1921 S. Alma School Rd, Suite 204
Mesa, Arizona 85210
www.y2keng.com

NORTHERN AVENUE - LIGHTING PLAN
STA 482+82 to 487+82

SHEET LT01

TRACS NO.

pw://tyli-pw.bentley.com:tyli-pw-01/Documents/Projects/221991.00_TT0372/600_CADD/05_Official/Dgn_PHASE 1/Sheets/Y2K/TT0372_ST_Lighting_Northern_Plan_01.dgn 12:59:45 PM 5/4/2026

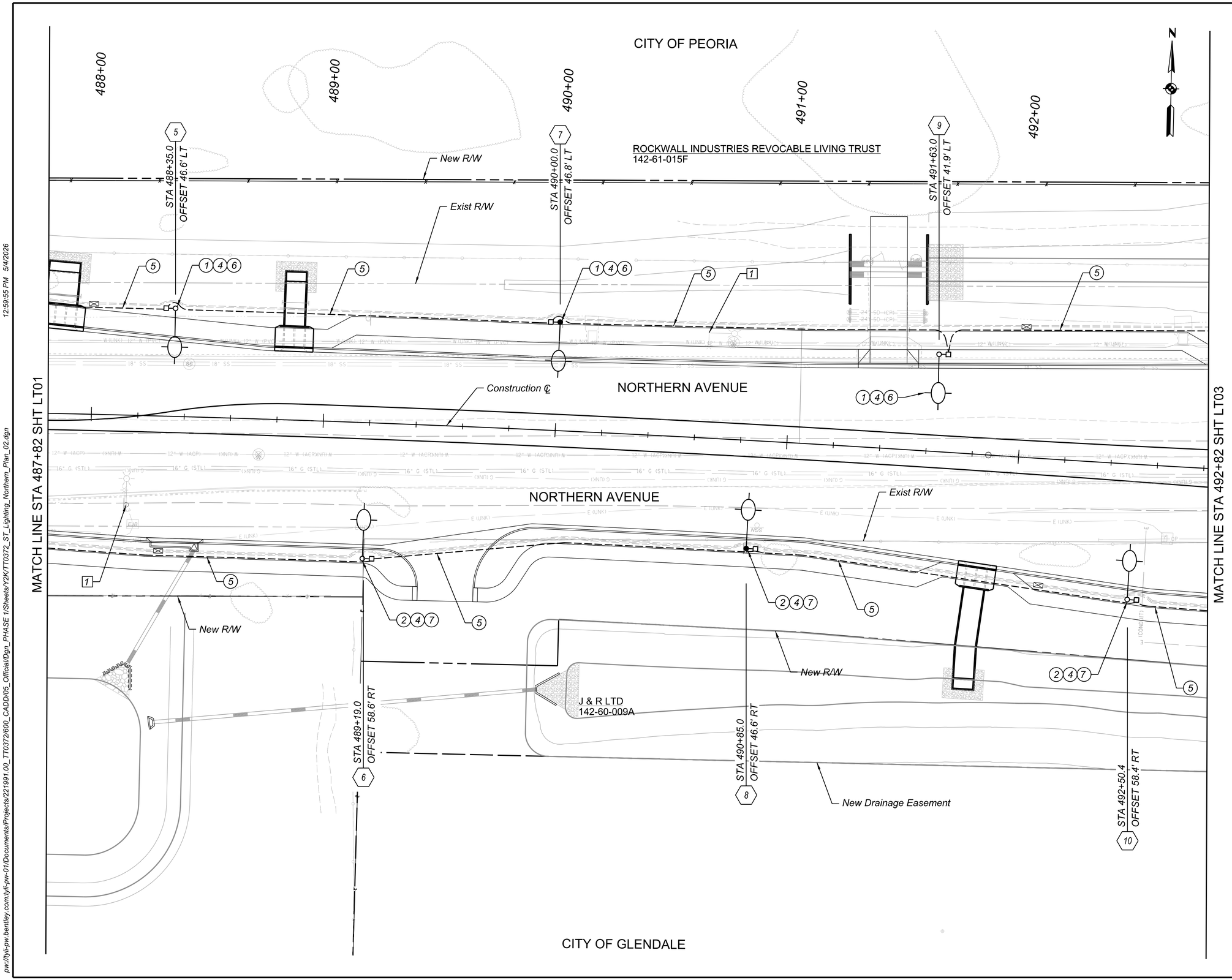

F.H.W.A. REGION	STATE	PROJECT NO.	SHEET NO.	TOTAL SHEETS	RECORD DRAWING
9	AZ	TT0372	124	224	

☐ *REMOVAL / RELOCATE* ☐

1 *Remove existing Luminaire, Mast Arm, and foundation* — 2 EA

◯ *CONSTRUCTION* ◯

XXX *Street Light Pole Number, see Pole Schedule LT06*

1 *Furnish and Install Peoria Street Light Pole on a Foundation*
- *ADOT Type G Pole (Det T-SL 4.07)* — 3 EA
- *18' Mast Arm (Det T-SL 4.29)* — 3 EA
- *Foundation (PE-150-1 and PE-150-2)* — 3 EA
- *GE Evove LED Luminaire, 15,300 Lumens (ERL2-0-16-C5-30-A-GRAY) w/ PEC* — 3 EA

2 *Furnish and Install Glendale Street Light Pole on a Foundation*
- *Glendale 22' P1 Pole (Det P1)* — 3 EA
- *Glendale 12'x8' Mast Arm (Det A6)* — 3 EA
- *Foundation and Grounding (Det F-1)* — 3 EA
- *Autobahn ATBM LED Luminaire 10,636 Lumens (ATBM- P10-MVOLT-R2--3K-MP-NL-P7-RFD308954) w/ PEC* — 3 EA

4 *Install APS Approved No. 5 Pull Box, Det T.S. 1-1* — 6 EA

5 *Install 2 1/2" Sch 40 PVC Conduit between Street Light Pull Boxes* — 1000 LF

6 *Install 2" Sch 40 PVC Conduit from Street Light to Pull box*
- *(2) #12 AWG Conductors*
- *(1) #12 Insulated XHHW Bond Conductor* — 30 LF

7 *Install 1" Sch 40 PVC Conduit from Street Light to Pull box*
- *(2) #12 AWG Conductors (THHN/THWN)*
- *(1) #12 Bare Bond Conductor* — 30 LF

NOTE: LT conduit shown schematically. See Joint Trench Details on Sheet IC06 for ITS and Street Lighting Conduit Trenching and construction notes.

SCALE: Hor: 1"=20'
Vert: NA

20 0 20 40
SCALE IN FEET

Contact Arizona 811 Two Working Days Before You Dig
ARIZONA811 BLUE STAKE, INC.
Call 811 or Click Arizona811.com

NO.	REVISION	BY	DATE
3			
2			
1			

MARICOPA COUNTY

NORTHERN PARKWAY
103RD AVENUE TO 91ST AVENUE - PHASE 1
PROJECT NO. TT0372

	BY	DATE
DESIGNED	R. NEIFFER	05/2026
DRAWN	N. NEIFFER	05/2026
CHECKED	C. WILLIAMS	05/2026

Registered Professional Engineer (Civil) CERTIFICATE NO. 42636 CHRISTOPHER B. WILLIAMS Date Signed 5-5-26 ARIZONA, U.S.A.

Y2K ENGINEERING
1921 S. Alma School Rd, Suite 204
Mesa, Arizona 85210
www.y2keng.com

NORTHERN AVENUE - LIGHTING PLAN
STA 487+82 TO 492+82

SHEET LT02

TRACS NO.

pw://tyli-pw.bentley.com:tyli-pw-01/Documents/Projects/221991.00_TT0372/600_CADD/05_Official/Dgn_PHASE 1/Sheets/Y2K/TT0372_ST_Lighting_Northern_Plan_02.dgn 12:59:55 PM 5/4/2026

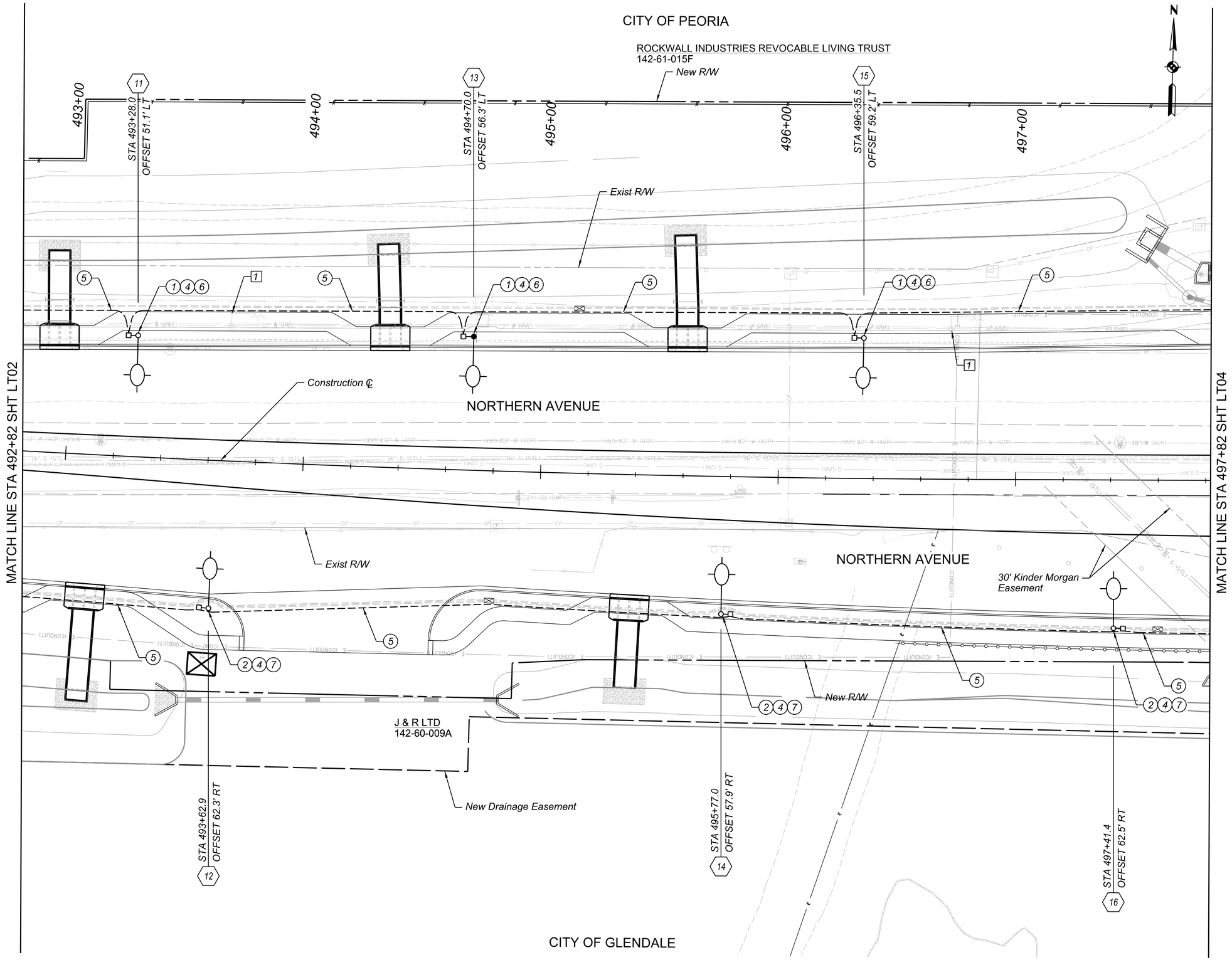

F.H.W.A. REGION	STATE	PROJECT NO.	SHEET NO.	TOTAL SHEETS	RECORD DRAWING
9	AZ	TT0372	125	224	

☐ *REMOVAL / RELOCATE* ☐

1 *Remove existing Luminaire, Mast Arm, and foundation* — 2 EA

◯ *CONSTRUCTION* ◯

XXX *Street Light Pole Number, see Pole Schedule LT06*

1 *Furnish and Install Peoria Street Light Pole on a Foundation*
- *ADOT Type G Pole (Det T-SL 4.07)* — 3 EA
- *18' Mast Arm (Det T-SL 4.29)* — 3 EA
- *Foundation (PE-150-1 and PE-150-2)* — 3 EA
- *GE Evove LED Luminaire, 15,300 Lumens (ERL2-0-16-C5-30-A-GRAY) w/ PEC* — 3 EA

2 *Furnish and Install Glendale Street Light Pole on a Foundation*
- *Glendale 22' P1 Pole (Det P1)* — 3 EA
- *Glendale 12'x8' Mast Arm (Det A6)* — 3 EA
- *Foundation and Grounding (Det F-1)* — 3 EA
- *Autobahn ATBM LED Luminaire 10,636 Lumens (ATBM- P10-MVOLT-R2- -3K-MP-NL-P7-RFD308954) w/ PEC* — 3 EA

4 *Install APS Approved No. 5 Pull Box, Det T.S. 1-1* — 6 EA

5 *Install 2 1/2" Sch 40 PVC Conduit between Street Light Pull Boxes* — 1000 LF

6 *Install 2" Sch 40 PVC Conduit from Street Light to Pull box*
(2) #12 AWG Conductors
(1) #12 Insulated XHHW Bond Conductor — 30 LF

7 *Install 1" Sch 40 PVC Conduit from Street Light to Pull box*
(2) #12 AWG Conductors (THHN/THWN)
(1) #12 Bare Bond Conductor — 30 LF

NOTE: LT conduit shown schematically. See Joint Trench Details on Sheet IC06 for ITS and Street Lighting Conduit Trenching and construction notes.

SCALE: Hor: 1"=20'
Vert: NA

20 0 20 40
SCALE IN FEET

Contact Arizona 811 Two Working Days Before You Dig
ARIZONA811 BLUE STAKE, INC.
Call 811 or Click Arizona811.com

NO.	REVISION	BY	DATE
3			
2			
1			

MARICOPA COUNTY

NORTHERN PARKWAY
103RD AVENUE TO 91ST AVENUE - PHASE 1
PROJECT NO. TT0372

	BY	DATE
DESIGNED	R. NEIFFER	05/2026
DRAWN	N. NEIFFER	05/2026
CHECKED	C. WILLIAMS	05/2026

Registered Professional Engineer (Civil)
CERTIFICATE NO. 42636
CHRISTOPHER B. WILLIAMS
Date Signed 5-5-26
ARIZONA, U.S.A.

Y2K ENGINEERING
1921 S. Alma School Rd, Suite 204
Mesa, Arizona 85210
www.y2keng.com

NORTHERN AVENUE - LIGHTING PLAN
STA 492+82 TO 497+82

SHEET LT03

TRACS NO.

pw://tyli-pw.bentley.com:tyli-pw-01/Documents/Projects/221991.00_TT0372/600_CADD/05_Official/Dgn_PHASE 1/Sheets/Y2K/TT0372_ST_Lighting_Northern_Plan_03.dgn 1:00:24 PM 5/4/2026

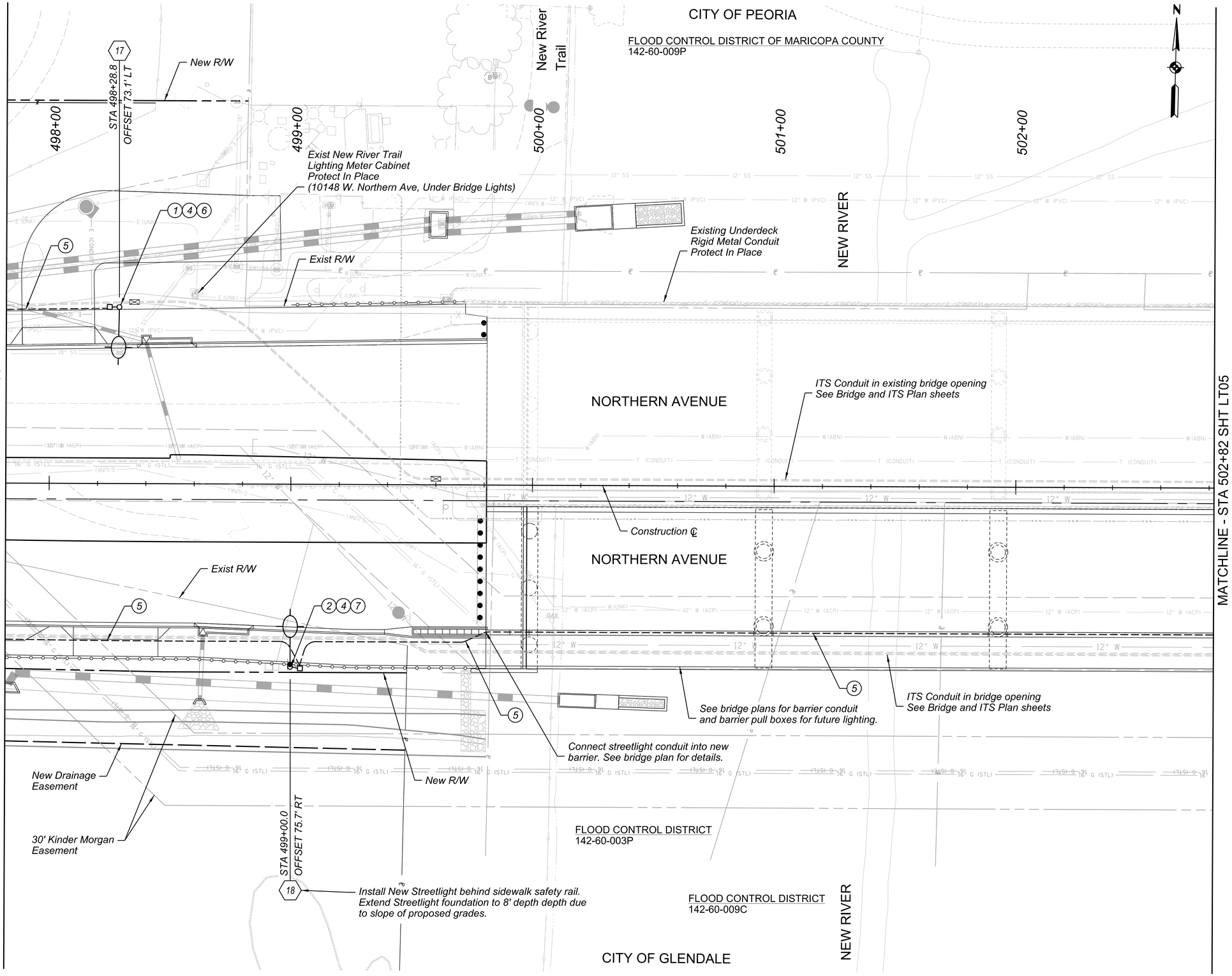

F.H.W.A. REGION	STATE	PROJECT NO.	SHEET NO.	TOTAL SHEETS	RECORD DRAWING
9	AZ	TT0372	126	224	

☐ REMOVAL / RELOCATE ☐

◯ CONSTRUCTION ◯

(XXX) Street Light Pole Number, see Pole Schedule LT06

(1) Furnish and Install Peoria Street Light Pole on a Foundation

ADOT Type G Pole (Det T-SL 4.07)	1 EA
18' Mast Arm (Det T-SL 4.29)	1 EA
Foundation (PE-150-1 and PE-150-2)	1 EA
GE Evove LED Luminaire, 15,300 Lumens (ERL2-0-16-C5-30-A-GRAY) w/ PEC	1 EA

(2) Furnish and Install Glendale Street Light Pole on a Foundation

Glendale 22' P1 Pole (Det P1)	1 EA
Glendale 12'x8' Mast Arm (Det A6)	1 EA
Foundation and Grounding (Det F-1)	1 EA
Autobahn ATBM LED Luminaire 10,636 Lumens (ATBM- P10-MVOLT-R2--3K-MP-NL-P7-RFD308954) w/ PEC	1 EA

(4) Install APS Approved No. 5 Pull Box, Det T.S. 1-1 — 2 EA

(5) Install 2 1/2" Sch 40 PVC Conduit between Street Light Pull Boxes — 500 LF

(6) Install 2" Sch 40 PVC Conduit from Street Light to Pull box — 70 LF
(2) #12 AWG Conductors
(1) #12 Insulated XHHW Bond Conductor

(7) Install 1" Sch 40 PVC Conduit from Street Light to Pull box — 10 LF
(2) #12 AWG Conductors (THHN/THWN)
(1) #12 Bare Bond Conductor

NOTE: LT conduit shown schematically. See Joint Trench Details on Sheet IC06 for ITS and Street Lighting Conduit Trenching and construction notes.

SCALE: Hor: 1"=20'
Vert: NA

20 0 20 40
SCALE IN FEET

Contact Arizona 811 Two Working Days Before You Dig
ARIZONA811 BLUE STAKE, INC.
Call 811 or Click Arizona811.com

NO.	REVISION	BY	DATE
3			
2			
1			

MARICOPA COUNTY

NORTHERN PARKWAY
103RD AVENUE TO 91ST AVENUE - PHASE 1
PROJECT NO. TT0372

	BY	DATE
DESIGNED	R. NEIFFER	05/2026
DRAWN	N. NEIFFER	05/2026
CHECKED	C. WILLIAMS	05/2026

Registered Professional Engineer (Civil) CERTIFICATE NO. 42636 CHRISTOPHER B. WILLIAMS Date Signed 5-5-26 ARIZONA, U.S.A.

Y2K ENGINEERING
1921 S. Alma School Rd, Suite 204
Mesa, Arizona 85210
www.y2keng.com

NORTHERN AVENUE - LIGHTING PLAN
STA 497+82 TO 502+82

SHEET LT04

TRACS NO.

pw://tyli-pw.bentley.com:tyli-pw-01/Documents/Projects/221991.00_TT0372/600_CADD/05_Official/Dgn_PHASE 1/Sheets/Y2K/TT0372_ST_Lighting_Northern_Plan_04.dgn 1:00:35 PM 5/4/2026

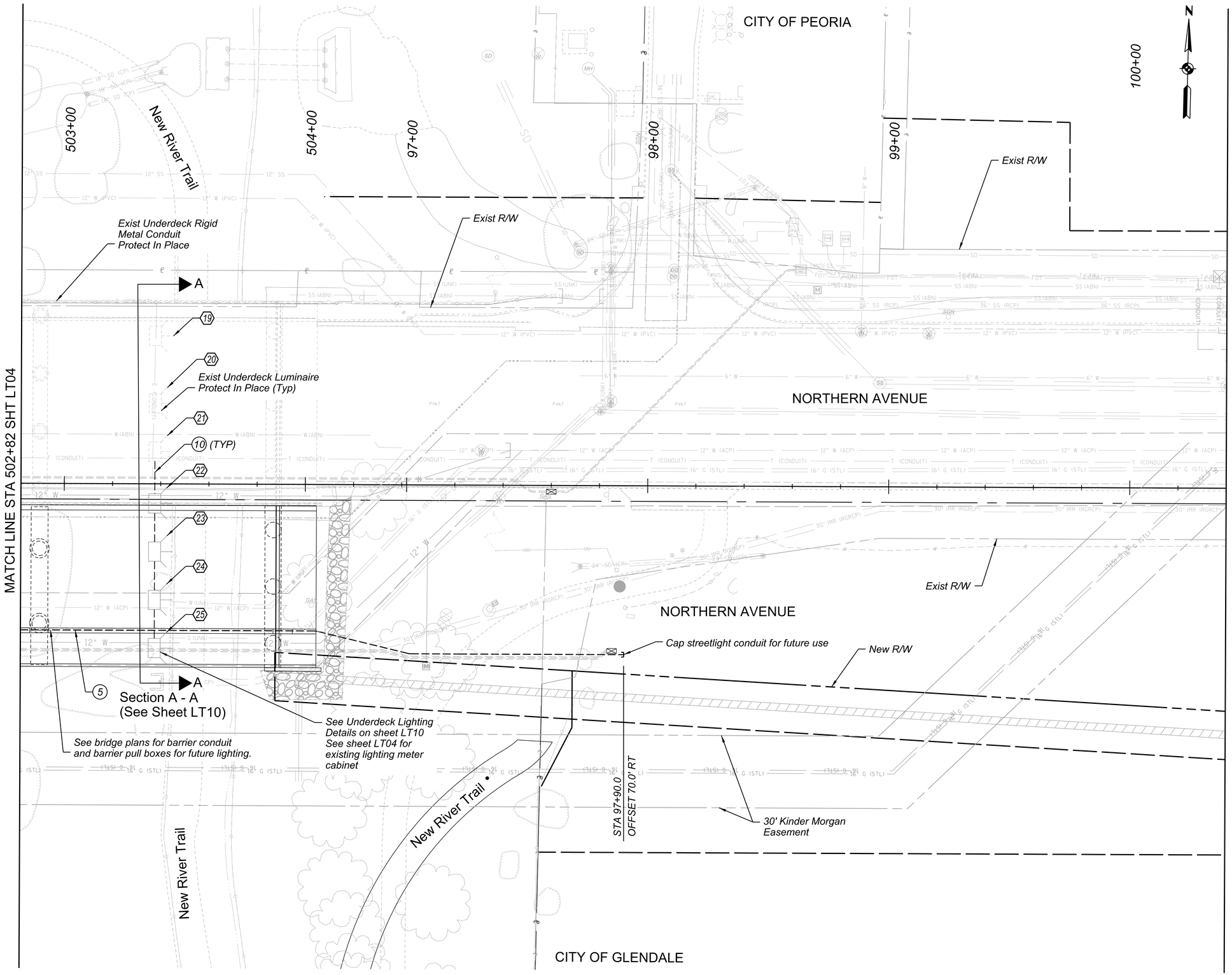

F.H.W.A. REGION	STATE	PROJECT NO.	SHEET NO.	TOTAL SHEETS	RECORD DRAWING
9	AZ	TT0372	127	224	

☐ *REMOVAL / RELOCATE* ☐

◯ *CONSTRUCTION* ◯

XXX Street Light Pole Number, see Pole Schedule LT06

5 Install 2 1/2" Sch 40 PVC Conduit between Street Light Pull Boxes — *255 LF*

10 Install 2" Rigid Metal Conduit From Existing Underdeck Luminaire to New Luminaires (2) #8 AWG Conductors (THHN/THWN) (1) #8 Insulated Green Bond — *80 LF*

NOTE: LT conduit shown schematically. See Joint Trench Details on Sheet IC06 for ITS and Street Lighting Conduit Trenching and construction notes.

SCALE: Hor: 1"=20'
Vert: NA

20 0 20 40
SCALE IN FEET

Contact Arizona 811 Two Working Days Before You Dig
Call 811 or Click Arizona811.com

NO.	REVISION	BY	DATE
3			
2			
1			

MARICOPA COUNTY

NORTHERN PARKWAY
103RD AVENUE TO 91ST AVENUE - PHASE 1
PROJECT NO. TT0372

	BY	DATE
DESIGNED	R. NEIFFER	05/2026
DRAWN	N. NEIFFER	05/2026
CHECKED	C. WILLIAMS	05/2026

Registered Professional Engineer (Civil) CERTIFICATE NO. 42636 CHRISTOPHER B. WILLIAMS Date Signed 5-5-26 ARIZONA, U.S.A.

Y2K ENGINEERING
1921 S. Alma School Rd, Suite 204
Mesa, Arizona 85210
www.y2keng.com

NORTHERN AVENUE - LIGHTING PLAN
STA 502+82 TO 105+40

SHEET LT05

TRACS NO.

pw://tyli-pw.bentley.com:tyli-pw-01/Documents/Projects/221991.00_TT0372/600_CADD/05_Official/Dgn_PHASE 1/Sheets/Y2K/TT0372_ST_Lighting_Northern_Plan_05.dgn 1:00:49 PM 5/4/2026

LIGHTING POLE AND LUMINAIRE SCHEDULE
NORTHERN AVENUE

F.H.W.A. REGION	STATE	PROJECT NO.	SHEET NO.	TOTAL SHEETS	RECORD DRAWING
9	AZ	TT0372	128	224	

POLE NO.	ROADWAY	STATION	OFFSET	LOAD CENTER CABINET	CIRCUIT	POLE		FOUNDATION		LUMINAIRE					OWNER / MAINTENANCE UNIT NUMBER	REMARKS
						TYPE	MAST ARM	TYPE	BASE	TYPE	NO.	VOLTAGE	LUMENS	DIST. TYPE		
1	NORTHERN AVENUE	485+54.0	52.6' LT	-	-	G-30'	18'	STD	STD	HZ	1	240	15,300	III	PEORIA	
2	NORTHERN AVENUE	486+08.6	50.6' RT	-	-	P1-22'	12'x8'	STD	STD	HZ	1	240	10,636	III	GLENDALE	
3	NORTHERN AVENUE	486+81.7	52.6' LT	-	-	G-30'	18'	STD	STD	HZ	1	240	15,300	III	PEORIA	
4	NORTHERN AVENUE	487+52.0	55.0' RT	-	-	P1-22'	12'x8'	STD	STD	HZ	1	240	10,636	III	GLENDALE	
5	NORTHERN AVENUE	488+35.0	46.6' LT	-	-	G-30'	18'	STD	STD	HZ	1	240	15,300	III	PEORIA	
6	NORTHERN AVENUE	489+19.0	58.6' RT	-	-	P1-22'	12'x8'	STD	STD	HZ	1	240	10,636	III	GLENDALE	
7	NORTHERN AVENUE	490+00.0	46.8' LT	-	-	G-30'	18'	STD	STD	HZ	1	240	15,300	III	PEORIA	
8	NORTHERN AVENUE	490+85.0	46.6' RT	-	-	P1-22'	12'x8'	STD	STD	HZ	1	240	10,636	III	GLENDALE	
9	NORTHERN AVENUE	491+63.0	41.9' LT	-	-	G-30'	18'	STD	STD	HZ	1	240	15,300	III	PEORIA	
10	NORTHERN AVENUE	492+50.4	58.4' RT	-	-	P1-22'	12'x8'	STD	STD	HZ	1	240	10,636	III	GLENDALE	
11	NORTHERN AVENUE	493+28.0	51.1' LT	-	-	G-30'	18'	STD	STD	HZ	1	240	15,300	III	PEORIA	
12	NORTHERN AVENUE	493+62.9	62.3' RT	-	-	P1-22'	12'x8'	STD	STD	HZ	1	240	10,636	III	GLENDALE	
13	NORTHERN AVENUE	494+70.0	56.3' LT	-	-	G-30'	18'	STD	STD	HZ	1	240	15,300	III	PEORIA	
14	NORTHERN AVENUE	495+77.0	57.9' RT	-	-	P1-22'	12'x8'	STD	STD	HZ	1	240	10,636	III	GLENDALE	
15	NORTHERN AVENUE	496+35.5	59.2' LT	-	-	G-30'	18'	STD	STD	HZ	1	240	15,300	III	PEORIA	
16	NORTHERN AVENUE	497+41.4	62.5' RT	-	-	P1-22'	12'x8'	STD	STD	HZ	1	240	10,636	III	GLENDALE	
17	NORTHERN AVENUE	498+28.8	73.1' LT	-	-	G-30'	18'	STD	STD	HZ	1	240	15,300	III	PEORIA	
18	NORTHERN AVENUE	499+00.0	74.6' RT	-	-	P1-22'	12'x8'	STD	STD	HZ	1	240	10,636	III	GLENDALE	EXTEND STREETLIGHT FOUNDATION TO 8' DEPTH
19	NORTHERN AVENUE	503+37.5	EXISTING	-	-	-	-	-	-	UD	1	240	-	-	PEORIA	EXISTING TO REMAIN
20	NORTHERN AVENUE	503+37.5	EXISTING	-	-	-	-	-	-	UD	1	240	-	-	PEORIA	EXISTING TO REMAIN
21	NORTHERN AVENUE	503+37.5	EXISTING	-	-	-	-	-	-	UD	1	240	-	-	PEORIA	EXISTING TO REMAIN
22	NORTHERN AVENUE	503+37.5	GIRDER 4A	-	-	-	-	-	-	UD	1	240	6,983	III	PEORIA	
23	NORTHERN AVENUE	503+37.5	GIRDER 4C	-	-	-	-	-	-	UD	1	240	6,983	III	PEORIA	
24	NORTHERN AVENUE	503+37.5	GIRDER 4E	-	-	-	-	-	-	UD	1	240	6,983	III	PEORIA	
25	NORTHERN AVENUE	503+37.5	GIRDER 4G	-	-	-	-	-	-	UD	1	240	6,983	III	PEORIA	

LEGEND:

G - 30'	PEORIA/ADOT POLE - ADOT STD DWG T-SL 4.07
T - 40'	ADOT POLE - ADOT STD DWG T-SL 4.06
P1-22'	GLENDALE 22' P1 POLE - DETAIL P1
B/A - 3	TYPE 2 BREAKAWAY BASE PER ADOT STD DWG T.S. 5-2
SL-15	DECORATIVE KIM ERA HSAS POLE ON BRIDGE PILASTER
HZ	HORIZONTAL MOUNT LED LUMINAIRE PER SPECIFICATION
UD	UNDERDECK LED LUMINAIRE PER SPECIFICATIONS

NOTES:

1. ALL MAINLINE LIGHT POLE OFFSETS ARE REFERENCED FROM THE NORTHERN AVENUE CENTERLINE TO THE CENTER OF THE POLE.
2. EACH LIGHT FIXTURE SHALL BE EQUIPPED WITH A 7-PIN NEMA TWIST LOCK PHOTO RECEPTACLE WITH SHORTING CAP.
3. INSTALL LUMINAIRE ARM PERPENDICULAR TO THE NORTHERN AVENUE CONSTRUCTION CENTERLINE.

Contact Arizona 811 Two Working Days Before You Dig
Call 811 or Click Arizona811.com

NO.	REVISION	BY	DATE
3			
2			
1			

MARICOPA COUNTY

NORTHERN PARKWAY
103RD AVENUE TO 91ST AVENUE - PHASE 1
PROJECT NO. TT0372

	BY	DATE
DESIGNED	R. NEIFFER	05/2026
DRAWN	N. NEIFFER	05/2026
CHECKED	C. WILLIAMS	05/2026

Registered Professional Engineer (Civil) CERTIFICATE NO. 42636 CHRISTOPHER B. WILLIAMS Date Signed 5-5-26 ARIZONA, U.S.A.

Y2K ENGINEERING
1921 S. Alma School Rd, Suite 204
Mesa, Arizona 85210
www.y2keng.com

ROADWAY LIGHTING
POLE SCHEDULE

SHEET LT06

TRACS NO.

pw://tyli-pw.bentley.com:tyli-pw-01/Documents/Projects/221991.00_TT0372/600_CADD/05_Official/Dgn_PHASE 1/Sheets/Y2K/TT0372_ST_Lighting_Schedule_Pole_01.dgn 1:00:57 PM 5/4/2026

F.H.W.A. REGION	STATE	PROJECT NO.	SHEET NO.	TOTAL SHEETS	RECORD DRAWING
9	AZ	TT0372	129	224	

UNDER BRIDGE LIGHTING
NORTHERN PARKWAY
LOAD CENTER CABINET TABLE

LOAD CENTER NO.	EXISTING
LOAD CENTER LOCATION	10148 W. NORTHERN AVENUE, UNDER BRIDGE LIGHTS
LOAD CENTER MAINTENANCE NO.	
LOAD CENTER TYPE	120/240 METERED
LOAD CENTER XFMR SIZE	
MAIN CIRCUIT BKR	

CKT NO.	CKT BKR	STATUS	BKR AMPS	CONDUCTOR SIZE	OUTPUT VOLTS	LOAD AMPS
A	1	EXISTING	20 AMP	#8	120V	5.010
B	2	EXISTING	20 AMP	#8	120V	5.010
	SPARE					
					SERVICE AMPS	10.02
					POWER (VA)	11.98

Contact Arizona 811 Two Working Days Before You Dig
Call 811 or Click Arizona811.com

NO.	REVISION	BY	DATE
3			
2			
1			

MARICOPA COUNTY

NORTHERN PARKWAY
103RD AVENUE TO 91ST AVENUE - PHASE 1
PROJECT NO. TT0372

	BY	DATE
DESIGNED	R. NEIFFER	05/2026
DRAWN	N. NEIFFER	05/2026
CHECKED	C. WILLIAMS	05/2026

Registered Professional Engineer (Civil) CERTIFICATE NO. 42636 CHRISTOPHER B. WILLIAMS Date Signed 5-5-26 ARIZONA, U.S.A.

Y2K ENGINEERING
1921 S. Alma School Rd, Suite 204
Mesa, Arizona 85210
www.y2keng.com

UNDER BRIDGE LIGHTING
PANEL SCHEDULE

SHEET LT07

TRACS NO.

pw://tyli-pw.bentley.com:tyli-pw-01/Documents/Projects/221991.00_TT0372/600_CADD/05_Official/Dgn_PHASE 1/Sheets/Y2K/TT0372_ST_Lighting_Schedule_Cond_01.dgn 1:01:14 PM 5/4/2026

F.H.W.A. REGION	STATE	PROJECT NO.	SHEET NO.	TOTAL SHEETS	RECORD DRAWING
9	AZ	TT0372	130	224	

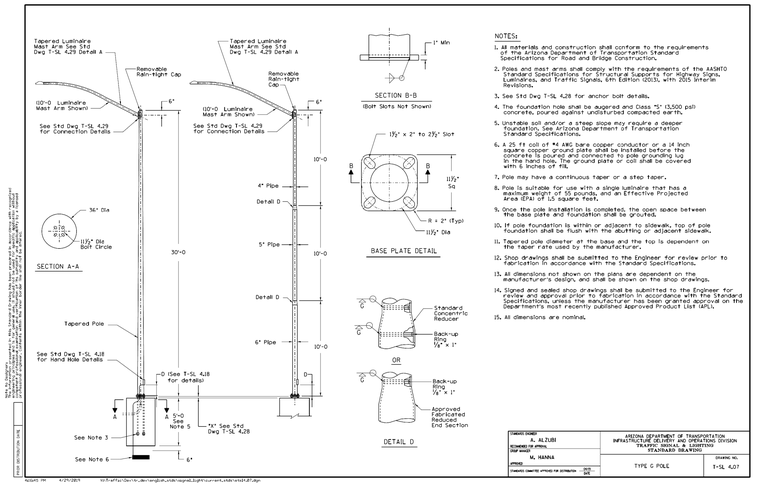

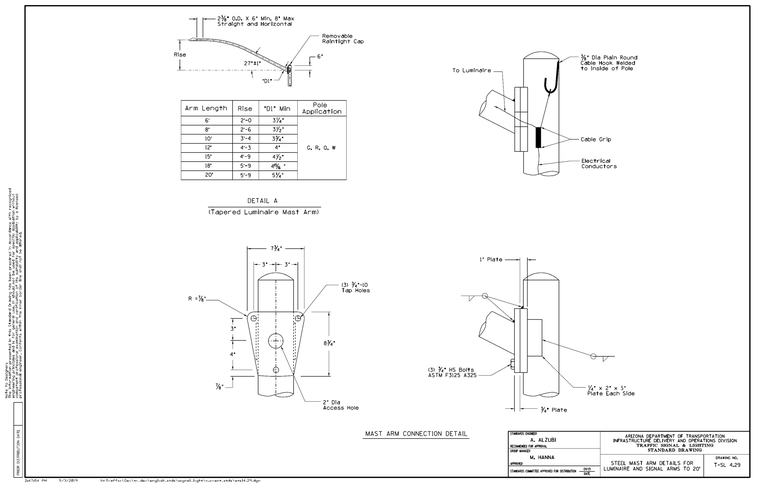

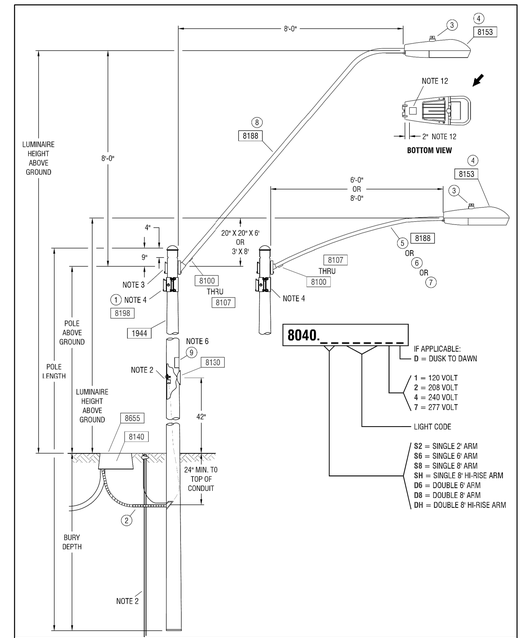

BY	LDR.	MGR.	DATE	REV.
DAL	M. CAMPA	J.M. HORMELL	03/2020	15

ARIZONA PUBLIC SERVICE COMPANY
T&D CONSTRUCTION STANDARDS

LIGHTS
ROADWAY LUMINAIRE ON
20' X 6', 3' X 8', OR 8' X 8' MAST ARM ON
19'-0", 30'-0", 38'-0" OR 40'-6" STEEL POLES

SH 1 OF 2

8040

NOTES:

1. ADJUST PHOTO EYE TO FACE NORTH.
2. A GROUND ROD IS PROVIDED WITH EACH STREET LIGHT POLE. WHERE A GROUND ROD CANNOT BE DRIVEN, ALTERNATE GROUND SHALL BE USED. SEE 2449 THRU 2460 FOR APPROVED ALTERNATES.
3. THE 40'-6" SELF-SUPPORTING STEEL POLE AND ONE OF THE 38'-6", HAVE TWO, MANUFACTURER INSTALLED SIMPLEX FITTINGS 180° APART FOR DOUBLE ARMS, SEE CHART.
4. APN 33701054 IS A POLE BAND ADAPTOR WITH A SIMPLEX FITTING. ADAPTOR IS REQUIRED FOR THE SECOND ARM IN DOUBLE ARM APPLICATIONS ON EXISTING POLES IN THE FIELD WITHOUT TWO SIMPLEX FITTINGS. SEE 8198 FOR AVAILABLE SIZES.
5. THE BROWN PHOTO CONTROL IS A FAIL OFF CONTROL AND SHALL BE USED WITH ALL INDUCTION AND LED LUMINAIRES.
6. SIGN, "NOTICE THIS POLE IS OWNED AND MAINTAINED BY APS. DISCONNECT INSIDE," IS REQUIRED ON ALL DUSK-TO-DAWN AND AREA LIGHTING APPLICATIONS.
7. POLES THAT HAVE MORE THAN ONE LUMINAIRE REQUIRE A SEPARATE CIRCUIT WITH FUSING FROM THE J-BOX TO EACH LUMINAIRES.
8. THE LIGHT CODE PROVIDES TWO SAME WATTAGE LUMINAIRES WHEN DOUBLE ARMS ARE SPECIFIED.
9. SEE SPEC 8030-8140 FOR IN-LINE FUSE FOR UNDERGROUND FEEDS.
10. SEE 8100 - 8107 FOR OVERHEAD ATTACHMENTS.
11. ON 277 VOLT STREET LIGHT CIRCUITS, INSTALL A "277 VOLT" MICARTA TAG ON CABLE IN J-BOX. TAG PROVIDED BY SPEC 8129.
12. ADJUSTABLE WATTAGE LEDs DEFINED BY MULTIPLE USE OF AN APN IN TABLE 1. WHEN LUMINAIRE IS DIALED DOWN TO 7, ATTACH NEW ADHESIVE LABEL LOCATED INSIDE OF THE LIGHT FIXTURE OVER THE MANUFACTURE STICKER. FOR 31 WATT, SET DIAL TO 7 AND ATTACH LABEL PROVIDED IN FIXTURE OR APN 00159051 DETAILED IN MS-8001.1. FOR 69 WATT, SET DIAL TO 7 AND ATTACH LABEL PROVIDED IN FIXTURE OR APN 00159052 DETAILED IN MS-8001.2

TABLE 1

LIGHT CODE	APN	WATTS	K	TYPE	VOLTS	INITIAL LUMENS	MOUNTING HEIGHT
CN53	00182859	55	2700	IND	120	3,500	SEE TABLE 2
CN54	00070898	100			120/208/240/277	8,400	
CN55	00116522	120			120/208/240/277	10,200	
CN56	00116523	150	5000		120/208/240/277	13,000	
CN57	00109193	200			120/208/240/277	15,250	
CN58	00116524	250			120/208/240/277	22,500	
CL50	00141041	31	3000	ADJUSTABLE LED	120/208/240/277	3,408	
CL51	00141041	43			120/208/240/277	4,820	
CL52	00141045	69			120/208/240/277	7,810	
CL53	00141045	98			120/208/240/277	11,000	
CL54	00141046	174		LED	120/208/240/277	20,100	
CL61	00128330	43	4000	ADJUSTABLE LED	120/208/240/277	4,900	
CL62	00128332	69			120/208/240/277	8,165	
CL63	00128332	98			120/208/240/277	11,500	
CL64	00128364	174		LED	120/208/240/277	21,000	
AS20	33806772	55	1700	LPS	120/240	8,000	
AS21	33806774	90			120/240	13,500	
AS22	33806776	135			120/240	22,500	
AS23	33806778	180			120/240	33,000	

TABLE 2

POLE CODE	POLE LENGTH	BURY DEPTH	POLE ABOVE GROUND	LUMINAIRE HEIGHT ABOVE GROUND ON ARM		
				20' X 6'	3' X 8'	8' X 8'
1944.19	19'-0"	5'-0"	14'-0"	14'-11"	16'-3"	----
1944.30	30'-6"	5'-6"	25'-0"	29'-11"	27'-3"	----
1944.38	38'-6"	6'-6"	32'-0"	32'-11"	34'-3"	39'-3"
1944.38X	38'-6"	8'-6"	32'-0"	32'-11"	34'-3"	39'-3"
1944.40X	40'-6"	8'-6"	32'-0"	32'-11"	34'-3"	39'-3"

MATERIAL LIST

CODE	8040.S2	8040.S6	8040.S8	8040.SH	8040.D6	8040.D8	8040.DH		
ITEM	QTY	QTY	QTY	QTY	QTY	QTY	QTY	DESCRIPTION	APN
1	-	-	-	-	1	1	1	ADAPTER BAND W/ SIMPLEX 3"	33701054
2	10	10	10	10	10	10	10	CONDUIT 1" PVC FLEX CORR	32900891
3	1	1	1	1	2	2	2	CONTROL PHOTO MULTI BR-20	00073241
4	1	1	1	1	2	2	2	LUMINAIRE - SEE TABLE 1	
5	1	-	-	-	-	-	-	MAST ARM ST LT 2" X 2'	00061225
6	-	1	-	-	2	-	-	MAST ARM ST LT 2" X 20' X 6'	33701112
7	-	-	1	-	-	2	-	MAST ARM ST LT 2" X 3' X 8'	33701124
8	-	-	-	1	-	-	2	MAST ARM ST LT 2" X 8' X 8'	33701123
9	1	1	1	1	1	1	1	SIGN POLE OWNED BY APS	00050092

BY	LDR.	MGR.	DATE	REV.
DAL	M. CAMPA	J.M. HORMELL	03/2020	15

ARIZONA PUBLIC SERVICE COMPANY
T&D CONSTRUCTION STANDARDS

LIGHTS
ROADWAY LUMINAIRE ON
20' X 6', 3' X 8', OR 8' X 8' MAST ARM ON
19'-0", 30'-0", 38'-0" OR 40'-6" STEEL POLES

SH 2 OF 2

8040

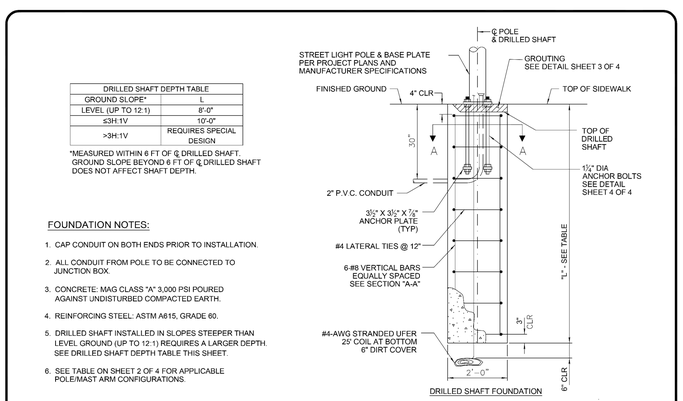

FOUNDATION NOTES:

1. CAP CONDUIT ON BOTH ENDS PRIOR TO INSTALLATION.
2. ALL CONDUIT FROM POLE TO BE CONNECTED TO JUNCTION BOX.
3. CONCRETE: MAG CLASS "A" 3,000 PSI POURED AGAINST UNDISTURBED COMPACTED EARTH.
4. REINFORCING STEEL: ASTM A615, GRADE 60.
5. DRILLED SHAFT INSTALLED IN SLOPES STEEPER THAN LEVEL GROUND (UP TO 12:1) REQUIRES A LARGER DEPTH. SEE DRILLED SHAFT DEPTH TABLE THIS SHEET.
6. SEE TABLE ON SHEET 2 OF 4 FOR APPLICABLE POLE/MAST ARM CONFIGURATIONS.

CITY OF PEORIA STANDARD DETAIL – PE– 150-1
STREET LIGHT FOUNDATION (1 OF 4)
3/23/23
THIS SUPPLEMENTAL STANDARD DETAIL FOR THE CITY OF PEORIA IS EFFECTIVE AS OF THE REVISION DATE LOCATED NEXT TO THE CITY SEAL

APPLICABLE POLE/MAST CONFIGURATIONS	
POLE TYPE	MAST ARM TYPE
16' AB POLE TYPE "G"	10' X 10' ANGLED MAST ARM - TYPE "G" POLE
16' SQUARE ANCHOR BASE POLE	8' SINGLE MAST ARM FOR 5" SQUARE POLE
20' STEPPED AB POLE TYPE "G"	6'-0" X 2'-0" MAST ARM - TYPE "G" POLE
	10' X 10' ANGLED MAST ARM - TYPE "G" POLE
	10'-0" X 3'-4" MAST ARM - TYPE "G" POLE
	15'-0" X 4'-9" MAST ARM - TYPE "G" POLE
	20'-0" X 5'-9" MAST ARM - TYPE "G" POLE
20' SQUARE ANCHOR BASE POLE	4' SINGLE MAST ARM FOR 5" SQUARE POLE
	8' SINGLE MAST ARM FOR 5" SQUARE POLE
25' STEPPED AB POLE TYPE "G"	6'-0" X 2'-0" MAST ARM - TYPE "G" POLE
	10' X 10' ANGLED MAST ARM - TYPE "G" POLE
	10'-0" X 3'-4" MAST ARM - TYPE "G" POLE
	15'-0" X 4'-9" MAST ARM - TYPE "G" POLE
	20'-0" X 5'-9" MAST ARM - TYPE "G" POLE
25' SQUARE ANCHOR BASE POLE	4' SINGLE MAST ARM FOR 5" SQUARE POLE
	8' SINGLE MAST ARM FOR 5" SQUARE POLE
30' STEPPED AB POLE TYPE "G"	10' X 10' ANGLED MAST ARM - TYPE "G" POLE
	10'-0" X 3'-4" MAST ARM - TYPE "G" POLE
	15'-0" X 4'-9" MAST ARM - TYPE "G" POLE
	20'-0" X 5'-9" MAST ARM - TYPE "G" POLE
32' SQUARE ANCHOR BASE POLE	4' SINGLE MAST ARM FOR 5" SQUARE POLE
	8' SINGLE MAST ARM FOR 5" SQUARE POLE

DESIGN NOTES:

1. FOUNDATION DESIGNED IN ACCORDANCE WITH "AASHTO STANDARD SPECIFICATIONS FOR STRUCTURAL SUPPORTS FOR HIGHWAY SIGNS, LUMINAIRES, AND TRAFFIC SIGNALS", 6TH EDITION, 2013 WITH REVISIONS THROUGH 2020.
2. DESIGN CRITERIA: WIND SPEED: 90 MPH.
3. SOIL PROPERTIES: ANGLE OF INTERNAL FRICTION: 25 DEG. UNIT WEIGHT: 110 PCF
4. IF SOIL ENCOUNTERED VARIES FROM VALUES ABOVE, THE ENGINEER SHALL BE NOTIFIED AND THE SHAFT DEPTH ACCORDINGLY.
5. FOUNDATION DESIGN CONTROLLED BY LATERAL LOADING.
6. FOUNDATION DESIGN BASED ON: LUMINAIRE WEIGHT OF 24 LBS AND EFFECTIVE PROJECTED AREA (EPA) OF 0.57 SQ FT

   6.25 SQ FT SIGN ALLOWANCE. MAXIMUM MOUNTING HEIGHT OF 8'-3" FROM BOTTOM OF POLE TO CENTER OF SIGN.

   12 SQ FT BANNER ALLOWANCE. MAXIMUM MOUNTING HEIGHT OF 13'-0" FROM BOTTOM OF POLE TO CENTER OF BANNER.

CITY OF PEORIA STANDARD DETAIL – PE– 150-2
STREET LIGHT FOUNDATION (2 OF 4)
3/23/23
THIS SUPPLEMENTAL STANDARD DETAIL FOR THE CITY OF PEORIA IS EFFECTIVE AS OF THE REVISION DATE LOCATED NEXT TO THE CITY SEAL

Contact Arizona 811 Two Working Days Before You Dig
Call 811 or Click Arizona811.com

NO.	REVISION	BY	DATE
3			
2			
1			

MARICOPA COUNTY

NORTHERN PARKWAY
103RD AVENUE TO 91ST AVENUE - PHASE 1
PROJECT NO. TT0372

	BY	DATE
DESIGNED	R. NEIFFER	05/2026
DRAWN	N. NEIFFER	05/2026
CHECKED	C. WILLIAMS	05/2026

REGISTERED PROFESSIONAL ENGINEER (CIVIL) 42636 CHRISTOPHER B. WILLIAMS 5-5-26 Date Signed ARIZONA, U.S.A.

Y2K ENGINEERING
1921 S. Alma School Rd, Suite 204
Mesa, Arizona 85210
www.y2keng.com

STREET LIGHTING
PEORIA AND ADOT DETAILS

SHEET LT08

TRACS NO.

1:01:27 PM 5/4/2026

pw://fyi-pw.bentley.com:fyi-pw-01/Documents/Projects/221991.00_TT0372/600_CADD/05_Official/Dgn_PHASE 1/Sheets/Y2K/TT0372_ST_Lighting_Details_01.dgn

F.H.W.A. REGION	STATE	PROJECT NO.	SHEET NO.	TOTAL SHEETS	RECORD DRAWING
9	AZ	TT0372	131	224	

NOTE(S):

1. ALL WIRE ENTRANCE AND EXIT HOLES SHALL BE FREE OF ALL BURRS AND SHARP EDGES.
2. SOME HIDDEN LINES NOT SHOWN FOR CLARITY.
3. DRAWING NOT TO SCALE.
4. TAG SHALL BE PERMANENTLY ATTACHED AND INCLUDE: DATE MANUFACTURED, MANUFACTURER AND DRAWING NUMBER.
5. MATERIAL USED MUST BE **MILL CERTIFIED** AND **ASTM COMPLIANT** WITH A MINIMUM YIELD STRENGTH OF 42,000 PSI.
6. POLE SHALL BE SAND BLASTED TO NEAR WHITE FINISH AND HOT DIPPED GALVANIZED PER ASTM A123.
7. ANCHOR BOLTS ARE FABRICATED FROM HOT-ROLLED CARBON STEEL BAR PER ASTM A36. EACH BOLT HAS "L" BEND ON ONE END AND A MINIMUM 4" THREAD ON THE OTHER w/ 2 NUTS AND 2 WASHERS (ASSEMBLED). HOT DIPPED GALVANIZED PER ASTM A153.
8. HAND HOLE COVER SHALL USE A FLAT RUBBER GASKET SHAPED TO MATCH HAND HOLE.

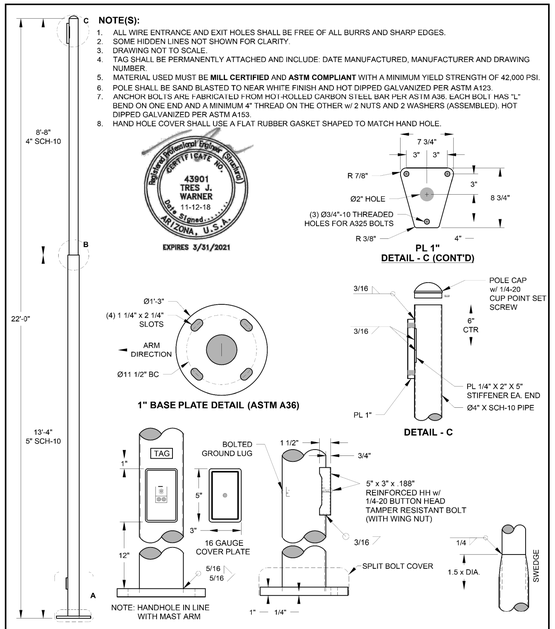

1" BASE PLATE DETAIL (ASTM A36)

PL 1" DETAIL - C (CONT'D)

DETAIL - C

POLE ASSEMBLY

DETAIL - A

DETAIL - B

REV: -	DESC.: -	DRAWN: - APPR: -	DATE: -
GLENDALE	**P1 - ARTERIAL POLE ON FOUNDATION 22'-0" STEPPED ROUND POLE USE w/ A6 ARM** GLENDALE	GLENDALE PUBLIC WORKS 6210 W Myrtle Ave # 112 Glendale, AZ 85301 PH: 623-930-2019 glendaleaz.com	**DRAWN BY:** JH **APPR. BY:** JS **DATE:** 07DEC2015 **FILE:** **POLES\GLENDALE* **DWG NO. :** P1 **SHEET :** 1 **OF** 34

NOTE(S):

1. ALL WIRE ENTRANCE AND EXIT HOLES SHALL BE FREE OF ALL BURRS AND SHARP EDGES.
2. SOME HIDDEN LINES NOT SHOWN FOR CLARITY.
3. DRAWING NOT TO SCALE.
4. TAG SHALL BE PERMANENTLY ATTACHED AND INCLUDE: DATE MANUFACTURED, MANUFACTURER AND DRAWING NUMBER.
5. MATERIAL USED MUST BE **MILL CERTIFIED** AND **ASTM COMPLIANT** WITH A MINIMUM YIELD STRENGTH OF 42,000 PSI.
6. STEEL SHALL BE SAND BLASTED TO NEAR WHITE FINISH AND HOT DIPPED GALVANIZED PER ASTM A123.
7. TUBE STEEL SHALL HAVE A MINIMUM YIELD STRENGTH OF 42 KSI (ASTM A500 GR).
8. LUMINAIRES SHALL HAVE A MAXIMUM WEIGHT OF 30 LBS. AND A MAXIMUM EPA OF 1.0 SF.

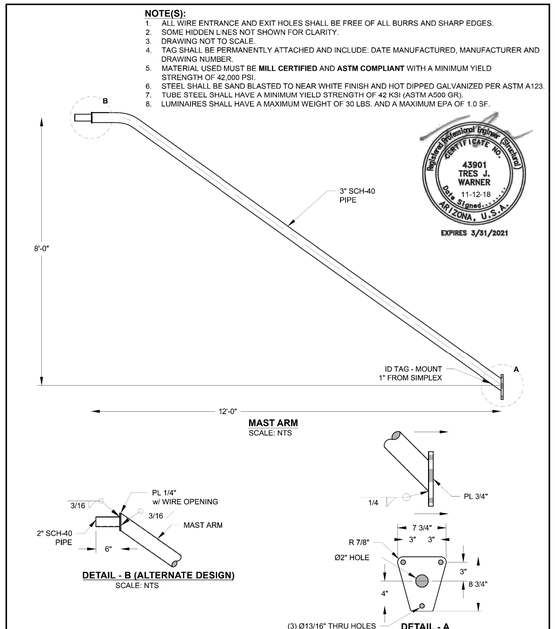

MAST ARM
SCALE: NTS

DETAIL - B (ALTERNATE DESIGN)
SCALE: NTS

DETAIL - A
SCALE: NTS

REV: -	DESC.: -	DRAWN: - APPR: -	DATE: -
GLENDALE	**A6 ARTERIAL STREETS USE w/ P1 AND P9 POLES** GLENDALE	GLENDALE PUBLIC WORKS 6210 W Myrtle Ave # 112 Glendale, AZ 85301 PH: 623-930-2019 glendaleaz.com	**DRAWN BY:** JH **APPR. BY:** JS **DATE:** 23DEC2015 **FILE:** **POLES\GLENDALE* **DWG NO. :** A6 **SHEET :** 27 **OF** 34

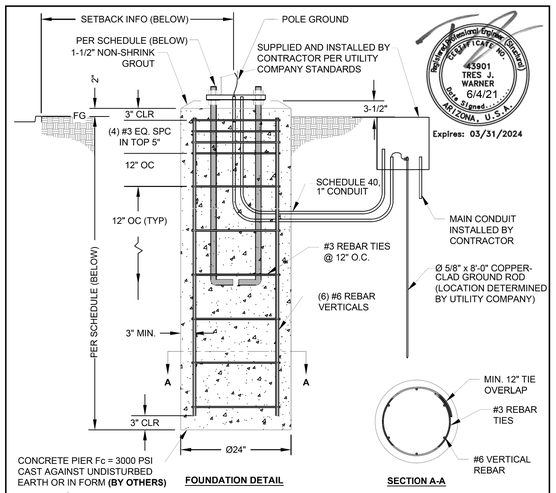

FOUNDATION DETAIL

SECTION A-A

DRILLED PIER SCHEDULE

POLE	EMBEDMENT DEPTH (MIN)	ANCHOR BOLT SPECIFICATION
P2	6'-0"	(4) 1" X 36" X 4" F1554 GR.36 AB w/ Leveling Nuts
P1, P9, MODIFIED G, P13, P14 GRAND AVE BREAKAWAY	5'-6"	(4) 1" X 36" X 4" F1554 GR.36 AB w/ Leveling Nuts
P8	SEE T3-2	SEE T3-2 (REV 9/2015)
P10	7'-6"	(4) $1\frac{1}{8}$" X 36" X 4" F1554 GR.36 AB w/ Leveling Nuts

SETBACK RULES:

A. **WITH SIDEWALK=1'** BACK OF WALK

B. **WITHOUT SIDEWALK, OR WITH DETACHED SIDEWALK=6'** BACK FROM CURB (MIN)

REV: -	DESC.: -	DRAWN: - APPR: -	DATE: -
GLENDALE	**F-1 FOUNDATION DETAIL** GLENDALE	GLENDALE PUBLIC WORKS 6210 W Myrtle Ave # 112 Glendale, AZ 85301 PH: 623-930-2019 glendaleaz.com	**DRAWN BY:** RM **APPR. BY:** JS **ATE:** 11JUL2017 **FILE:** **POLES\GLENDALE* **DWG NO. :** F1 **SHEET :** 34 **OF** 34

NOTE: See General Roadway Lighting Notes on Sheet LN04

Contact Arizona 811 Two Working Days Before You Dig
Call 811 or Click Arizona811.com

NO.	REVISION	BY	DATE
3			
2			
1			

MARICOPA COUNTY

NORTHERN PARKWAY
103RD AVENUE TO 91ST AVENUE - PHASE 1
PROJECT NO. TT0372

	BY	DATE
DESIGNED	R. NEIFFER	05/2026
DRAWN	N. NEIFFER	05/2026
CHECKED	C. WILLIAMS	05/2026

Registered Professional Engineer (Civil) CERTIFICATE NO. 42636 CHRISTOPHER B. WILLIAMS 5-5-26 Date Signed ARIZONA, U.S.A.

Y2K ENGINEERING
1921 S. Alma School Rd, Suite 204
Mesa, Arizona 85210
www.y2keng.com

STREET LIGHTING
GLENDALE DETAILS

SHEET
LT09

TRACS NO.

pw://tyli-pw.bentley.com:tyli-pw-01/Documents/Projects/221991.00_TT0372/600_CADD/05_Official/Dgn_PHASE 1/Sheets/Y2K/TT0372_ST_Lighting_Details_02.dgn 1:01:53 PM 5/4/2026

F.H.W.A. REGION	STATE	PROJECT NO.	SHEET NO.	TOTAL SHEETS	RECORD DRAWING
9	AZ	TT0372	132	224	

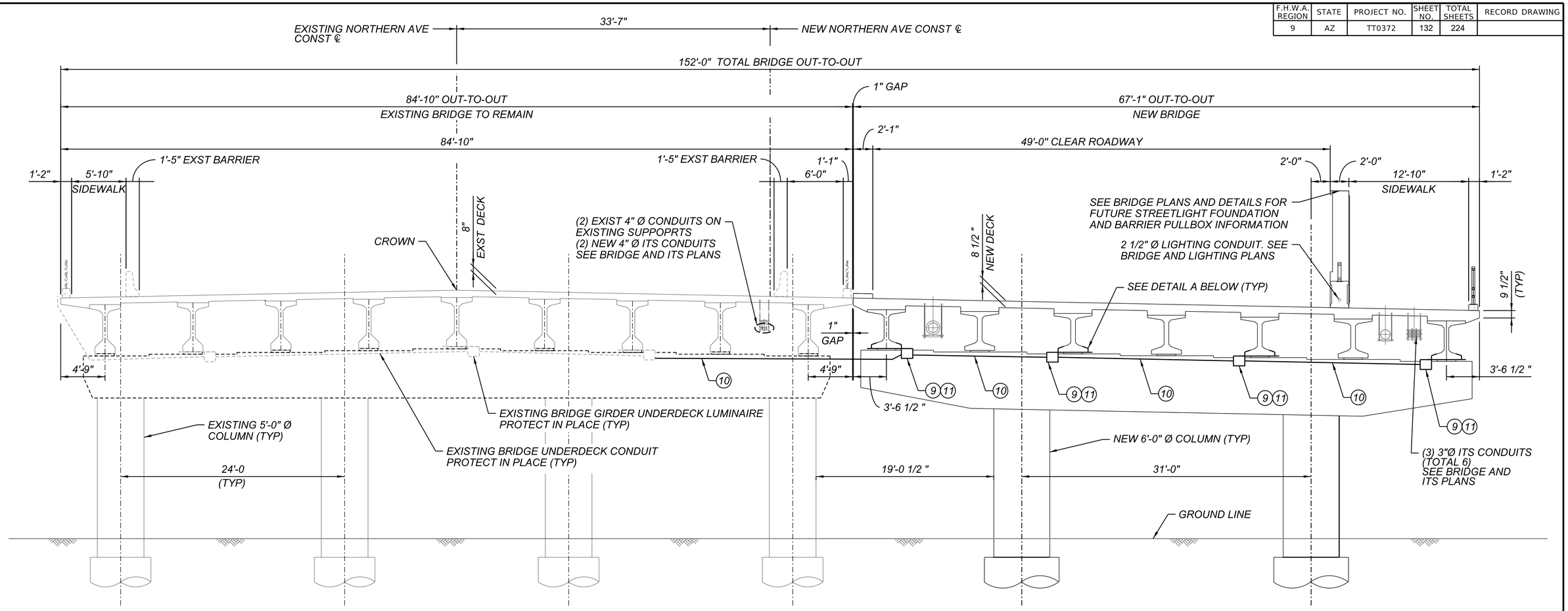

BRIDGE UNDERDECK LIGHTING - TYPICAL SECTION A-A

(LOOKING AHEAD STATION - EAST)
SCALE: NTS

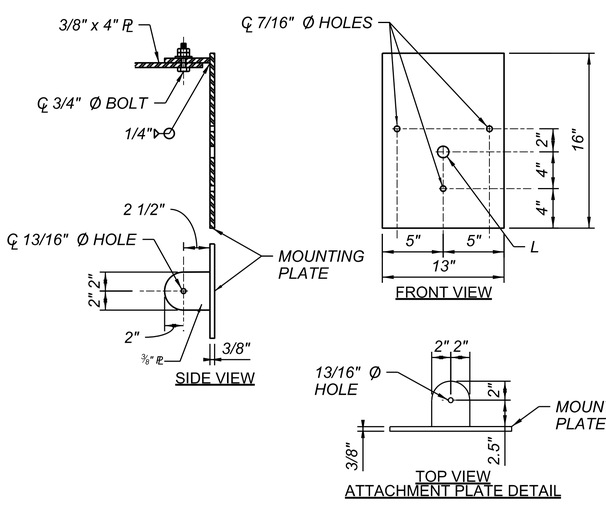

ATTACHMENT PLATE DETAIL

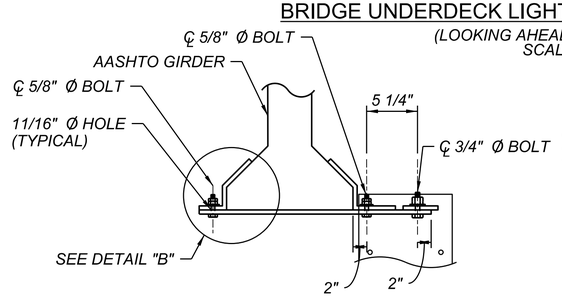

BRIDGE UNDERDECK LUMINAIRE ATTACHMENT DETAIL A

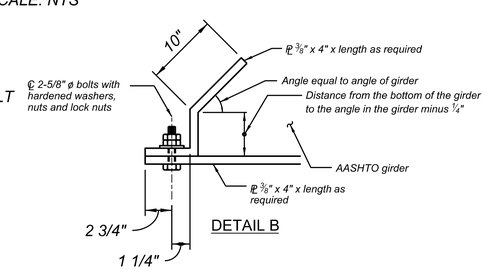

DETAIL B

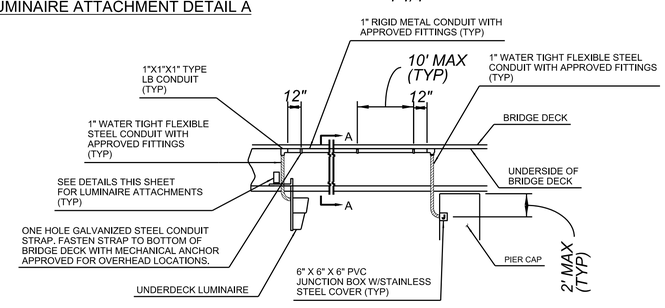

DETAIL C

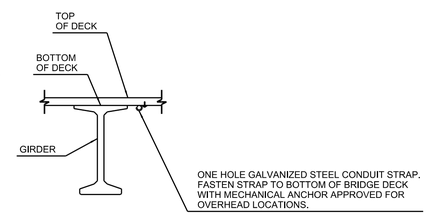

SECTION A-A

LUMINAIRE ATTACHMENT NOTES:

1. CONDUIT SIZE AND LOCATION SHALL BE AS SHOWN ON THE PLANS.
2. ALL STEEL SHALL BE ASTM A-36.
3. ALL LUMINAIRE ATTACHMENTS - CONDUITS, STRAPS AND JUNCTION BOX COVERS SHALL BE PAINTED TO MATCH THE BRIDGE.
4. ALL BOLTS, NUTS, WASHERS SHALL BE EITHER GALVANIZED OR CADMIUM PLATED.

CONSTRUCTION

9	Install Girder Luminaire Attachement as shown in details below	4 EA
10	Install 2" Rigid Metal Conduit From Exisitng Underdeck Luminaire to New Luminaires (2) #8 AWG Conductors (THHN/THWN) (1) #8 Insulated Green Bond	80 LF
11	Furnish and Install Peoria Underdeck Light Holophane Wallpack LED Luminaire, 6,495 Lumens, w/ PEC W4GLED-20C1000-30K-T3M-MVOLT-SPD-P7-TP-LWG-LVG-BZSPD (with Wire Guard and Vandal Guard)	4 EA

NO.	REVISION	BY	DATE
3			
2			
1			

MARICOPA COUNTY

NORTHERN PARKWAY
103RD AVENUE TO 91ST AVENUE - PHASE 1
PROJECT NO. TT0372

	BY	DATE
DESIGNED	R. NEIFFER	05/2026
DRAWN	N. NEIFFER	05/2026
CHECKED	C. WILLIAMS	05/2026

REGISTERED PROFESSIONAL ENGINEER (CIVIL) 42636 CHRISTOPHER B. WILLIAMS 5-5-26 Date Signed ARIZONA, U.S.A.

Y2K ENGINEERING
1921 S. Alma School Rd, Suite 204
Mesa, Arizona 85210
www.y2keng.com

Contact Arizona 811 Two Working Days Before You Dig
ARIZONA811 BLUE STAKE, INC.
Call 811 or Click Arizona811.com

BRIDGE UNDERDECK LIGHTING
UNDERDECK DETAILS - NEW RIVER TRAIL

SHEET LT10

TRACS NO.

pw://tyli-pw.bentley.com:tyli-pw-01/Documents/Projects/221991.00_TT0372/600_CADD/05_Official/Dgn_PHASE 1/Sheets/Y2K/TT0372_ST_Lighting_Details_03.dgn 1:02:08 PM 5/4/2026

F.H.W.A. REGION	STATE	PROJECT NO.	SHEET NO.	TOTAL SHEETS	RECORD DRAWING
9	AZ	TT0372	133	224	

TRAFFIC SIGNAL PLANS

NORTHERN AVENUE & 103RD AVENUE

PEORIA, ARIZONA

TRAFFIC ENGINEER

BURGESS & NIPLE, INC.
1230 W WASHINGTON ST
SUITE 511
TEMPE, ARIZONA 85288

CONTACT: DAVID LENZER, PE
PHONE: (480) 427-9575
EMAIL: DAVID.LENZER@BURGESSNIPLE.COM

SHEET INDEX

SHEET	DESCRIPTION	LOCATION
ST01	TRAFFIC SIGNAL COVER SHEET	-
ST02	TRAFFIC SIGNAL GENERAL NOTES	-
ST03	TRAFFIC SIGNAL PLAN	NORTHERN AVE & 103RD AVE
ST04	TRAFFIC SIGNAL CABINET AND POLE SCHEDULE	NORTHERN AVE & 103RD AVE
ST05	TRAFFIC SIGNAL CONDUCTOR SCHEDULE	NORTHERN AVE & 103RD AVE
ST06	SINGLE LINE DIAGRAM	-

LEGEND - CITY OF PEORIA

- No. 7 Pull Box w/Extension
- Service Pedestal Cabinet
- Battery Back-Up System Cabinet
- PEORIA Controller Cabinet & Foundation w/Cabinet Pad
- 2", 2½" or 3" PVC Conduit Run
- PEORIA Signal Pole
- Video Detection Camera
- CCTV Camera
- Fire Pre-Emption Sensor
- Conduit stubout
- City of Peoria Signal Pole and Mast Arm
- Traffic Signal Head Type F
- Traffic Signal Head Type G
- Traffic Signal Head Type Q
- Traffic Signal Head Type R
- Pedestrian Signal Head
- Pedestrian Push Button w/Sign
- PEORIA Luminaire on Mast Arm
- (1) PVC Run Number Call Out
- (A) Signal Pole Letter Call Out
- (A) Cabinet Foundation Call Out
- BBS Battery Backup System Foundation Call Out
- 1 No. 7 Pull Box Call Out

AS-BUILT CERTIFICATION

I HEREBY CERTIFY THAT THE "AS-BUILT" INFORMATION SHOWN HEREON WAS OBTAINED UNDER MY DIRECT SUPERVISION AND IS CORRECT AND COMPLETE TO THE BEST MY KNOWLEDGE AND BELIEF.

REGISTERED LAND SURVEYOR/ENGINEER DATE

REGISTRATION NO.

CONTRACTOR

PERMIT NO.

APPROVAL DATE

REGISTRATION NO.

NOTICE:

THE CITY OF PEORIA ASSUMES NO RESPONSIBILITY FOR THE ACCURACY OF THE "AS-BUILT" INFORMATION PROVIDED AS PUBLIC RECORD.

Released for Permitting:

This set of plans has been reviewed for compliance with City requirements prior to issuance of construction permits. The City neither accepts nor assumes any liability for errors or omissions. This compliance approval shall not prevent the City Engineer from requiring corrections or errors or omissions in plans found to be in violation of any law or ordinance.

Review	Reviewer	Date	Review	Reviewer	Date
Paving			Traffic		
G & D			Fire		
Ret. Walls			Concrete		
Water			Storm Drain		
Sewer					

For City Engineer Date

Revisions:

For City Engineer Rev 1 Date

For City Engineer Rev 2 Date

Contact Arizona 811 Two Working Days Before You Dig
ARIZONA811 BLUE STAKE, INC.
Call 811 or Click Arizona811.com

NO.	REVISION	BY	DATE
3			
2			
1			

MARICOPA COUNTY

NORTHERN PARKWAY
103RD AVENUE TO 91ST AVENUE - PHASE 1
PROJECT NO. TT0372

	BY	DATE
DESIGNED	E. SOLEM	04/2026
DRAWN	E. SOLEM	04/2026
CHECKED	A. FREDE	04/2026

Registered Professional Engineer (Civil) CERTIFICATE NO. 79480 ALLISON R. FREDE Date Signed 04/30/26 ARIZONA, U.S.A.

BURGESS & NIPLE
1230 W. WASHINGTON ST. SUITE 511
TEMPE, AZ 85288

TRAFFIC SIGNAL COVER

SHEET ST01

TRACS NO.

10:25:57 PM4/22/2026
Projects\221991.00_TT0372\600_CADD\05_Official\Dgn_PHASE 1\Sheets\B&N\TT0372_ST_Signal_Cover_01.dgn

TRAFFIC SIGNAL GENERAL NOTES - CITY OF PEORIA

F.H.W.A. REGION	STATE	PROJECT NO.	SHEET NO.	TOTAL SHEETS	RECORD DRAWING
9	AZ	TT0372	134	224	

GENERAL NOTES

1) ALL MATERIAL, EQUIPMENT AND INSTALLATION SHALL CONFORM TO:
   A. THE CITY OF PEORIA TRAFFIC SIGNAL STANDARD DETAILS.
   B. ADOT'S TRAFFIC SIGNALS AND LIGHTING STANDARD DRAWINGS, CURRENT VERSION.
   C. THE MANUAL ON UNIFORM TRAFFIC CONTROL DEVICES (MUTCD). LATEST EDITION ADOPTED BY ADOT.
   D. THE CITY PHOENIX BARRICADE MANUAL.
   E. THE CITY OF PEORIA BID DOCUMENTATION AND THESE PLANS.

2) THE CONTRACTOR SHALL CONTACT ALL UTILITIES AND BLUE STAKE 48 HOURS BEFORE STARTING ANY CONSTRUCTION. IT IS THE RESPONSIBILITY OF THE CONTRACTOR TO CONTACT ALL INVOLVED AGENCIES AND FIELD VERIFY EXACT LOCATIONS OF ALL UTILITIES. PRIOR TO CONSTRUCTION, THE CONTRACTOR SHALL POTHOLE AND VERIFY THE LOCATION OF EXISTING UTILITIES. IF DISCREPANCIES EXIST, THE CONTRACTOR SHALL NOTIFY THE ENGINEER IMMEDIATELY.

3) PRIOR TO CONSTRUCTION, THE CONTRACTOR SHALL VERIFY ALL FOUNDATION AND POLE LOCATIONS. THE CONTRACTOR SHALL POTHOLE AND PERFORM SITE VISIT TO DETERMINE ANY POTENTIAL OVERHEAD OR UNDERGROUND CONFLICTS, AND COORDINATE WITH THE CITY OF PEORIA PROJECT MANAGER AND THE DESIGN CONSULTANT PRIOR TO ORDERING EQUIPMENT.

4) THE CONTRACTOR SHALL CONTACT ARIZONA PUBLIC SERVICE (APS) AT (602) 371-7546, OR SALT RIVER PROJECT (SRP) AT (602) 236-4830 FOR ELECTRIC SERVICE INSTALLATION REQUIREMENTS.

5) THE CONTRACTOR SHALL REPLACE IN LIKE AND KIND, PER MAG STANDARD EXISTING LANDSCAPING AND/OR IRRIGATION SYSTEM DISTURBED BY CONSTRUCTION OF THIS PROJECT. THE CONTRACTOR SHALL COORDINATE THIS WORK WITH THE LANDSCAPE MAINTENANCE SUPERVISOR, CITY OF PEORIA COMMUNITY SERVICES DEPARTMENT AT (623)773-7137. WHEN EXCAVATING IN OR ADJACENT TO LANDSCAPING WITHIN THE ROW, THE CONTRACTOR SHALL CONTACT THE PROPERTY OWNER, HOA OR MANAGEMENT COMPANY REGARDING THE LOCATION OF UNDERGROUND IRRIGATION FACILITIES.

6) ANY DAMAGE TO PRIVATE PROPERTY SHALL BE REPORTED TO THE CITY OF PEORIA AND THE PROPERTY OWNER. REPAIR AND/OR REPLACEMENT, IN KIND, SHALL BE COORDINATED WITH THE PROPERTY OWNER AND/OR THE CITY.

7) ALL SIGNAL EQUIPMENT SHALL BE IN PLACE AND OPERATIONAL PRIOR TO REMOVING EXISTING STOP SIGNS. STOP SIGNS SHALL BE REMOVED SHORTLY AFTER ACTIVATION AS APPROVED BY THE CITY OF PEORIA ENGINEERING INSPECTOR. PRIOR TO ACTIVATION OF THE TRAFFIC SIGNAL, TRAFFIC CONTROL CHANGE (W20-101) SIGNS SHALL BE INSTALLED ON ALL APPROACHES. THESE SIGNS SHALL REMAIN IN PLACE FOR 30 DAYS.

8) THE CONTRACTOR SHALL PROVIDE TRAFFIC CONTROL DURING CONSTRUCTION PER THE MUTCD AND THE CITY OF PHOENIX BARRICADE MANUAL. A POLICE OFFICER IS TO BE PROVIDED BY THE CONTRACTOR ANY TIME THE CONSTRUCTION OCCURS WITHIN 300' OF A SIGNALIZED INTERSECTION, OR AS DETERMINED BY THE CITY OF PEORIA ENGINEERING INSPECTOR/ENGINEER.

9) THE CONTRACTOR SHALL NOTIFY THE CITY OF PEORIA'S TRAFFIC ENGINEERING INSPECTOR AT (623) 773-8445, AND THE CITY OF PEORIA'S ENGINEERING INSPECTION SUPERVISOR AT (623) 773-8439 AT LEAST 48-HOURS IN ADVANCE OF ANY CONSTRUCTION. THE CONTRACTOR IS RESPONSIBLE FOR OBTAINING THE REQUIRED BUILDING DEPARTMENT PERMIT AND INSPECTIONS.

10) THE CONTRACTOR SHALL OBTAIN ALL PERMITS FROM THE CITY OF PEORIA AND OTHER APPLICABLE AGENCIES PRIOR TO CONSTRUCTION.

11) THE DESIGN ENGINEER IS RESPONSIBLE TO COORDINATE AND ACQUIRE ALL NECESSARY LICENSE AGREEMENTS FROM SRP, IF APPLICABLE.

12) THE QUANTITIES AND SITE CONDITIONS ON THESE PLANS ARE FOR INFORMATIONAL PURPOSES ONLY AND ARE SUBJECT TO ERROR AND OMISSIONS. CONTRACTORS SHALL SATISFY THEMSELVES AS TO THE ACTUAL QUANTITIES AND SITE CONDITIONS PRIOR TO BIDDING THE WORK FOR CONSTRUCTION COVERED BY THESE PLANS.

13) THE CONTRACTOR SHALL RETURN ALL REMOVED/UNUSED TRAFFIC SIGNAL EQUIPMENT TO THE CITY OF PEORIA MUNICIPAL OPERATIONS CENTER, 8850 N. 79TH AVENUE OR 111TH AVENUE & UNION HILLS DRIVE YARD. FOR ADDITIONAL INFORMATION, PLEASE CONTACT THE STREET MAINTENANCE SUPERVISOR AT (623) 773-7432.

14) EXISTING ELECTRICAL SERVICE ADDRESS TO REMAIN: 10315 W. NORTHERN AVENUE.

CONSTRUCTION

1) CONSTRUCTION TIMING AND ROAD CLOSURES SHALL BE COORDINATED WITH PUBLIC WORKS AND ENGINEERING INSPECTIONS. ALL NECESSARY TRAFFIC CONTROL PERMITS SHALL BE OBTAINED.

2) THE CONTRACTOR SHALL PROVIDE NEW IMSA CONDUCTORS. NO SPLICING OF CONDUCTORS IN CONDUIT RUN WILL BE ALLOWED. PULL NEW CONDUCTORS INTO CONDUIT AS SPECIFIED IN THE CONDUCTOR SCHEDULE. ALL SPLICES SHALL BE SCOTCHKOTE ELECTRICAL COATING SEALED AND ALL CONDUCTORS SHALL BE LABELED PER THE CITY OF PEORIA COLOR CODE AND WIRING DETAIL. ALL IMSA CONDUCTORS SHALL BE INSTALLED WITHOUT SPLICING FROM THE SIGNAL HEAD TO THE PULL BOXES. TS BLOCKS SHALL NOT BE USED AS A CONNECTION POINT BETWEEN THE PULL BOX AND THE VEHICLE OR PEDESTRIAN INDICATIONS.

3) ALL PULL BOXES SHALL BE LEFT IN A CLEAN CONDITION. FREE OF DIRT AND DEBRIS UPON COMPLETION OF WORK.

4) ALL SPLICED CONNECTIONS SHALL BE COMPRESSION CRIMPED SHALL BE BLACKBURN (THOMAS & BETTS) WR189 OR WR9 TYPE CRIMP. CORRECT TYPE COMPRESSION TOOL SHALL BE USED. INSULATION SHALL BE STRIPPED BACK FROM ALL EARTH (GREEN) #8 CONDUCTORS TO WITHIN 4" OF TOP OF CONDUIT. ALL WIRES SHALL BE TWISTED TOGETHER PRIOR TO INSERTION INTO CRIMP CONNECTOR.

5) DRILLING HEIGHT FOR SIGNAL FACES SHALL BE PER ADOT STANDARD DRAWING T.S. 4-26. TYPE XI OR TYPE VII MOUNTS SHALL BE USED FOR ALL VEHICLE SIGNAL INDICATIONS ATTACHED TO THE VERTICAL POLES, AS PER THE APPROVED PLANS. THE CONTRACTOR SHALL CONFER WITH THE CITY OF PEORIA INSPECTOR FOR SIDE-MOUNT DRILLING LOCATIONS. THE CONTRACTOR SHALL PROVIDE AND INSTALL AN EXTENDED RISER ON ALL TYPE XI MOUNTS FOR ALL F HEADS THAT ARE LOCATED WHERE THE MAST ARM ATTACHES TO THE SIGNAL POLE TO ACCOMMODATE FOR FUTURE G HEAD INSTALLATION. TYPE "V"AND OR TYPE "VII"MOUNTS SHALL BE USED FOR THE PEDESTRIAN INDICATIONS.

6) ALL SIGNAL HEADS WILL BE BAGGED/COVERED WITH A BURLAP OR EQUIVALENT MATERIAL THAT DOES NOT ALLOW LIGHT PENETRATION WHEN NOT IN FULL OPERATION. BLACK MATERIAL WILL NOT BE ACCEPTED.

7) THE TOP OF NEW POLE FOUNDATIONS SHALL BE INSTALLED 4-INCHES BELOW ADJACENT SIDEWALK ELEVATION AND FINISHED IN WITH APRON. LEVELING NUTS WILL BE BLOCKED/FORMED OUT DURING CONCRETE APRON INSTALLATION AND GROUTED BACK IN TO PROVIDE FOR FUTURE ACCESS. GROUT TO BE INSTALLED LEVEL WITH THE BASE OF THE POLE. REFER TO CITY OF PEORIA STANDARD DETAIL PE_080-07 GROUT DISH DETAIL.

8) PRIOR TO TURN ON, THE CONTRACTOR IS RESPONSIBLE FOR THE POSITIONING, LEVELING, TIGHTENING, AND ALIGNING OF THE INDIVIDUAL SIGNAL HEADS, SO THEY ARE COMPLETELY VISIBLE TO THE APPROACHING DRIVER THAT THE SIGNAL IS INTENDED TO CONTROL.

9) THE CONTRACTOR SHALL CONTACT ARIZONA PUBLIC SERVICE (APS) OR SALT RIVER PROJECT (SRP) FOR THE ELECTRICAL SERVICE. THE CONTRACTOR IS RESPONSIBLE FOR INSTALLING ALL ELECTRICAL SERVICE CONDUCTORS, UNLESS OTHERWISE DIRECTED BY APS OR SRP.

10) VIDEO CABLE IS TO RUN CONTINUOUS FROM CABINET TO RESPECTIVE CAMERA WITHOUT SPLICES.

11) THE CONTRACTOR SHALL COORDINATE WITH THE CITY OF PEORIA'S SIGNAL MAINTENANCE DIVISION AT (623) 773-7432; 5-WORKING DAYS PRIOR TO SIGNAL ACTIVATION FOR PRE-TURN ON INSPECTION. INSTALLATION OF ALL EQUIPMENT, WIRING AND ALIGNMENT OF HEADS SHALL BE DONE PRIOR TO PRE-TURN ON INSPECTION. NEW SIGNAL ACTIVATION SHALL NOT OCCUR ON A MONDAY OR FRIDAY. THE CONTRACTOR SHALL COORDINATE THE ACTIVATION OF ANY NEW SIGNAL, SO THAT IT OCCURS ON A TUESDAY, WEDNESDAY, OR THURSDAY.

12) THE CONTRACTOR SHALL PROVIDE AND INSTALL "TRAFFIC CONTROL CHANGE" SIGNS (W20-101) WITH FLAGS 500-FEET PRIOR TO THE INTERSECTION FOR ALL AFFECTED APPROACHES FOR 30-DAYS. THE CONTRACTOR IS RESPONSIBLE FOR THE REMOVAL AND RETURN SIGNS TO THE CITY OF PEORIA PUBLIC WORKS DEPARTMENT AT 8850 N. 79TH AVENUE.

13) ALL SIGNING AND STRIPING THAT PERTAINS TO THE OPERATION OF THE TRAFFIC SIGNAL SHALL BE INSTALLED IMMEDIATELY PRIOR TO THE ACTIVATION OF THE SIGNAL. THE CONTRACTOR SHALL CONTACT THE CITY OF PEORIA ENGINEERING INSPECTOR AT (623) 773-7536, 3 WORKING DAYS PRIOR TO INSTALLATION FOR APPROVAL OF LAYOUT AND SIGN LOCATIONS.

14) ALL ADA FACILITIES SHALL BE IN PLACE PRIOR TO THE ACTIVATION OF THE TRAFFIC SIGNAL.

FIBER OPTIC

1) LOCATION OF CONDUITS AND VAULTS TO BE PER PLAN. SPACING SHALL BE 650'.

2) PROVIDE 50' OF SLACK IN ALL #8 COMMUNICATION VAULTS PER DETAIL PE-071. PROVIDE 100' OF SLACK IN ALL #9 COMMUNICATION VAULTS PER DETAIL PE-073.

3) SPLICE ENCLOSURES IN #9 VAULTS TO BE AFL LIGHTGUARD 350XL OR APPROVED EQUAL.

4) ALL NEW FIBER OPTIC INSTALLATIONS TO BE TESTED UPON COMPLETION OF JOB. TESTING AND VERIFICATION TO BE PROVIDED TO TRAFFIC ENGINEERING STAFF. THIS MAY INCLUDE OTDR RESULTS, ECHO PING TESTS, DEMONSTRATION OF VIDEO CONNECTIVITY, AND/OR RADIO COMMUNICATION. THE APPROPRIATE METHOD OF TESTING IS TO BE COORDINATED WITH TRAFFIC ENGINEERING STAFF.

5) THE CONTRACTOR SHALL COORDINATE WITH PEORIA UNIFIED SCHOOL DISTRICT (PUSD) FOR ANY WORK THAT MAY IMPACT FIBER OR CONDUIT SERVING THE SCHOOL. THE CONTRACTOR SHALL COORDINATE WITH PUSD FOR ANY PLANNED OUTAGES.

Contact Arizona 811 Two Working Days Before You Dig
ARIZONA811 BLUE STAKE, INC.
Call 811 or Click Arizona811.com

NO.	REVISION	BY	DATE
3			
2			
1			

MARICOPA COUNTY

NORTHERN PARKWAY
103RD AVENUE TO 91ST AVENUE - PHASE 1
PROJECT NO. TT0372

	BY	DATE
DESIGNED	E. SOLEM	04/2026
DRAWN	E. SOLEM	04/2026
CHECKED	A. FREDE	04/2026

Registered Professional Engineer (Civil) CERTIFICATE NO. 79480 ALLISON R. FREDE Date Signed 04/20/2026 ARIZONA, U.S.A.

BURGESS & NIPLE
1230 W. WASHINGTON ST. SUITE 511
TEMPE, AZ 85288

TRAFFIC SIGNAL GENERAL NOTES

SHEET ST02

TRACS NO.

4:56:29 PM 4/27/2026

Projects\221991.00_TT0372\600_CADD\05_Official\Dgn_PHASE 1\Sheets\B&N\TT0372_ST_Signal_Notes_01.dgn

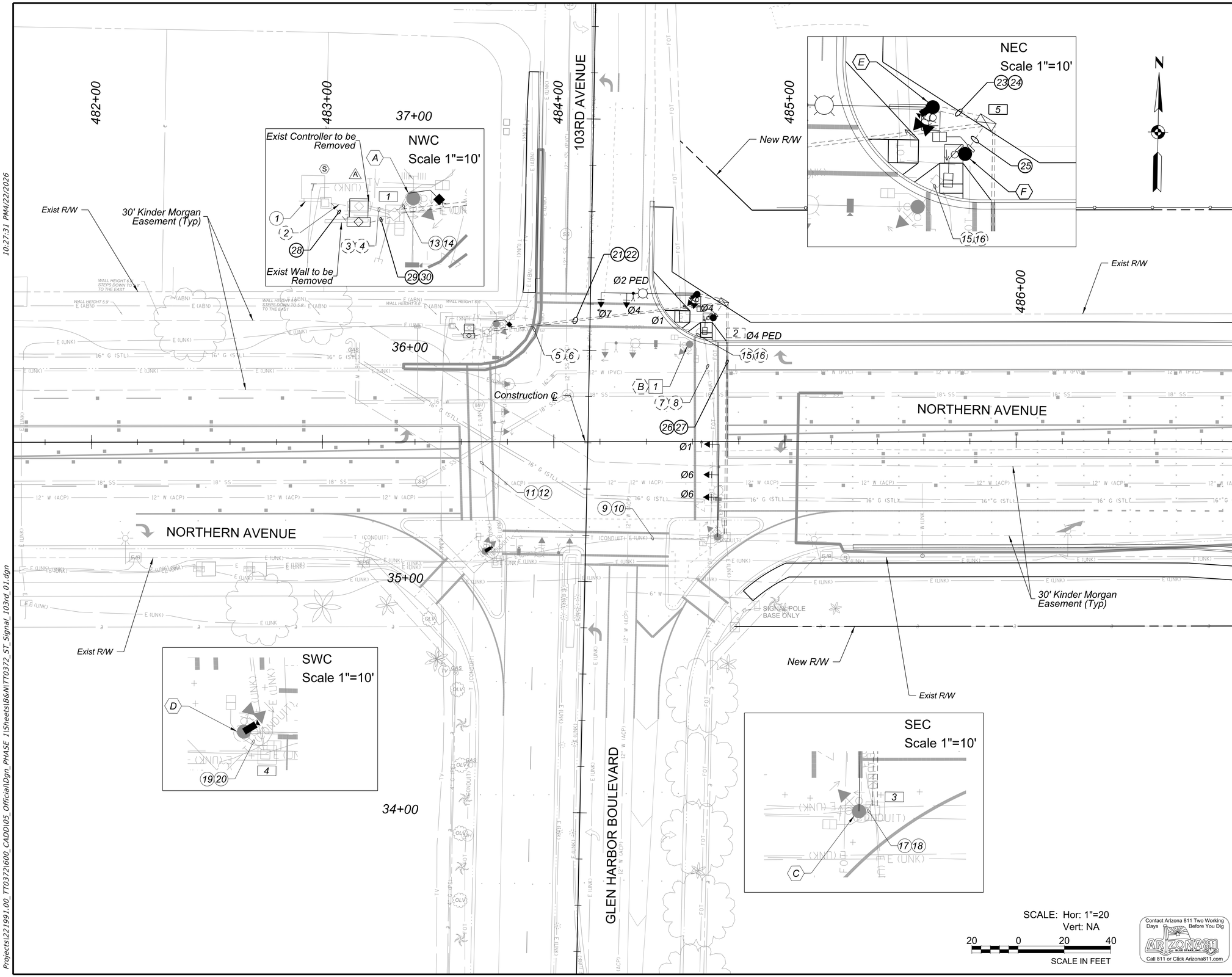

F.H.W.A. REGION	STATE	PROJECT NO.	SHEET NO.	TOTAL SHEETS	RECORD DRAWING
9	AZ	TT0372	135	224	

PULL BOXES

ITEM NUMBER	℄ STATION NORTHERN AVENUE	OFFSET LT.	OFFSET RT.
#7 PULL BOX			
Exist 1 W/ EXT.	Approx. As Shown	-	-
Exist 2 W/ EXT.	To Be Removed	-	-
Exist 3 W/ EXT.	Approx. As Shown	-	-
Exist 4 W/ EXT.	Approx. As Shown	-	-
5 W/ EXT.	484+73.56	60.29	

NOTES
1. All equipment is per Peoria Standard Details
2. See Station and Offset for approximate location

CONDUIT LEGEND
- XX Conduit to Remain
- XX Conduit to Be Removed or Abandoned
- XX Install New Conduit

TYPE OF CONDUIT INSTALLATION:
T = Trenching
HB = Horizontal Boring

☐ REMOVAL / RELOCATE ☐

1 Remove and salvage existing traffic signal pole and equipment to the City of Peoria. Remove all associated traffic signal conduits, conductors, and pull boxes. Remove existing traffic signal foundation. -

NO.	REVISION	BY	DATE
3			
2			
1			

MARICOPA COUNTY

NORTHERN PARKWAY
103RD AVENUE TO 91ST AVENUE - PHASE 1
PROJECT NO. TT0372

	BY	DATE
DESIGNED	E. SOLEM	04/2026
DRAWN	E. SOLEM	04/2026
CHECKED	A. FREDE	04/2026

Registered Professional Engineer (Civil) CERTIFICATE NO. 79480 ALLISON R. FREDE Date Signed 04/20/26 ARIZONA, U.S.A.

BURGESS & NIPLE
1230 W. WASHINGTON ST. SUITE 511
TEMPE, AZ 85288

TRAFFIC SIGNAL PLAN
NORTHERN AVE & 103RD AVE

SHEET ST03

TRACS NO.

Projects\221991.00_TT0372\600_CADD\05_Official\Dgn_PHASE 1\Sheets\B&N\TT0372_ST_Signal_103rd_01.dgn

10:27:31 PM4/22/2026

CABINET AND POLE SCHEDULE

TRAFFIC SIGNAL CONTROLLER				REMARKS	LOCATION*
CABINET	TYPE	CONTROLLER	AUX. CONTROL		
S	MYERS MUEG16A			10315 W. NORTHERN AVENUE	APPROXIMATELY AS SHOWN
A	MCCAIN ATC CABINET	MCCAIN OMNI CONTROLLER	POLICE OPERATED CONTROL W/ 6' DETACHABLE CABLE		STA. 483+62.52 45.89' LEFT

POLES				MAST ARM		SIGNALS				
NO.	LAYOUT	TYPE	FOUNDATION DIAMETER	SIG.	LUM.	MTG.	FACE	P.B. SIGN	REMARKS	LOCATION*
A	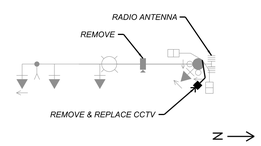	EXISTING TO REMAIN R	EXISTING TO REMAIN	EXISTING TO REMAIN 50'	EXISTING TO REMAIN 20'	EXISTING TO REMAIN	EXISTING TO REMAIN	EXISTING TO REMAIN	1. REMOVE AND REPLACE CCTV 2. EXISTING TO REMAIN 3. REMOVE EXISTING ECONOLITE VIDEO DETECTION	APPROXIMATELY AS SHOWN
B	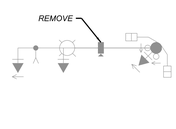	TO BE REMOVED Q	TO BE REMOVED	TO BE REMOVED 40'	TO BE REMOVED 20'	TO BE REMOVED	TO BE REMOVED	TO BE REMOVED	1. TO BE REMOVED 2. REMOVE EXISTING ECONOLITE VIDEO DETECTION	TO BE REMOVED
C	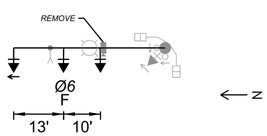	EXISTING TO REMAIN Q	EXISTING TO REMAIN	EXISTING TO REMAIN 40'	EXISTING TO REMAIN 20'	1–SB	1–F	EXISTING TO REMAIN	1. INSTALL NEW 40 FOOT MAST ARM 2. EXISTING POLE FOUNDATION TO REMAIN 3. RELOCATE EXISTING SIGNAL HEADS 4. REMOVE EXISTING ECONOLITE VIDEO DETECTION	APPROXIMATELY AS SHOWN
D	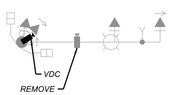	EXISTING TO REMAIN Q	EXISTING TO REMAIN	EXISTING TO REMAIN 40'	EXISTING TO REMAIN 20'	EXISTING TO REMAIN	EXISTING TO REMAIN	EXISTING TO REMAIN	1. INSTALL NEW MIOVISION DETECTION CAMERA ON SIGNAL POLE UPRIGHT. 2. REMOVE EXISTING ECONOLITE VIDEO DETECTION. 3. EXISTING TO REMAIN.	APPROXIMATELY AS SHOWN
E	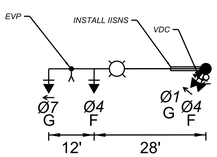	PE014D	3'–0"	SMA40	20'	1–II 1–SB 2–XI	1–G 1–F 1–G 1–F	1–PPB R10–3e(L)	1. INSTALL NEW IISNS AND MOUNTS 2. INSTALL NEW MIOVISION VIDEO DETECTION CAMERA ON SIGNAL POLE UPRIGHT 3. INSTALL NEW EVP ON SIGNAL MAST ARM 4. INSTALL NEW GE LED EVOLVE ROADWAY LIGHTING LUMINARE 5. INSTALL 1 NEW PEDESTRIAN PUSH BUTTON	STA. 484+62.06 63.64' LEFT **1087.14'
F	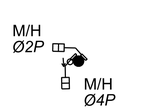	PE05D 10'	2'–0"	–	–	2–V	2–M/H	1–PPB R10–3e(R)	1. INSTALL 1 NEW PEDESTRIAN PUSH BUTTON 2. INSTALL 1 NEW COUNTDOWN PEDESTRIAN SIGNAL HEAD 3. INSTALL 1 NEW COUNTDOWN PEDESTRIAN SIGNAL HEAD	STA. 484+69.04 53.51' LEFT **1086.80'

*ALL STATION AND OFFSET VALUES ARE BASED ON THE NORTHERN PARKWAY CONSTRUCTION CENTERLINE.

**ELEVATION SHOWN IS 6–INCHES BELOW SIDEWALK ELEVATION. FOUNDATION SHALL BE INSTALLED 6–INCHES BELOW ADJACENT SIDEWALK ELEVATION

CCTV – CLOSED CIRCUIT TELEVISION CAMERA

VDC – VIDEO DETECTION CAMERA

SMA – SIGNAL MAST ARM

LMA – LUMINAIRE MAST ARM

EVP – EMERGENCY VEHICLE PREEMPTION

IISNS – INTERNALLY ILLUMINATED STREET NAME SIGN

M/H – MAN/HAND PEDESTRIAN SIGNAL HEAD

ILLUMINATED STREET NAME SIGN DETAIL

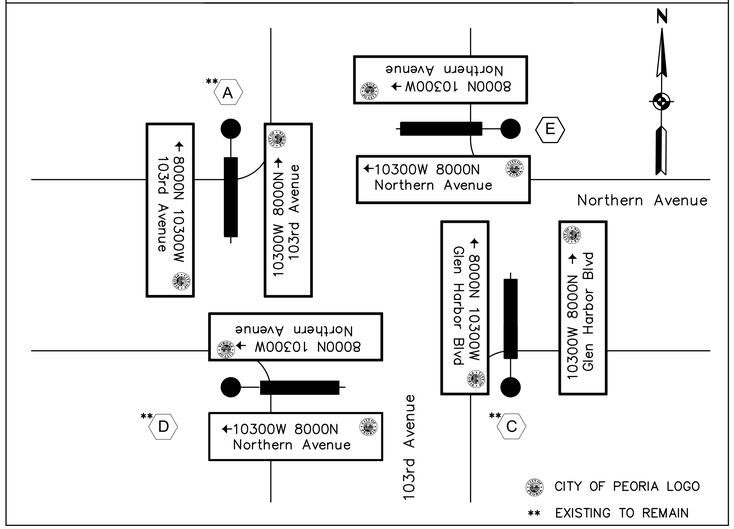

EQUIPMENT NOTES

1. PRIOR TO PURCHASING TRAFFIC SIGNAL MATERIALS, THE CONTRACTOR SHALL SUBMIT A TRAFFIC SIGNAL EQUIPMENT SUBMITTAL. ANY EQUIPMENT PURCHASED PRIOR TO THE APPROVED EQUIPMENT SUBMITTAL SHALL BE DEEMED AT–RISK AND IS THE SOLE FINANICAL RESPONSIBILITY OF THE CONTRACTOR.

2. ALL TRAFFIC SIGNAL EQUIPMENT WILL BE NEW WITH FULL WARRANTY, USED OR REFURBISHED EQUIPMENT WILL NOT BE PERMITTED.

3. ALL RED, YELLOW, GREEN VEHICLE INDICATIONS AND INLINE FILLED IN MAN/HAND PEDESTRIAN INDICATIONS SHALL BE DIALIGHT LED INDICATIONS.

4. ALL NEW 12–INCH SIGNAL HEADS SHALL HAVE 5–INCH METAL LOUVERED BACK PLATES. YELLOW TAPE MAY BE REQUIRED AS DETERMINED BY THE SIGNAL PLANS.

5. THE CONTRACTOR SHALL PROVIDE AND INSTALL SINGLE CHANNEL 721 OPTICAL DETECTORS (OPTICOM) WITH ALL APPROPRIATE MOUNTING HARDWARE, INTERFACE CABLES, OPTICAL CABLES, AND ANY OTHER EQUIPMENT REQUIRED FOR A FULLY FUNCTIONING PRE_EMPTION SYSTEM. CONTRACTOR SHALL PROVIDE AND INSTALL A 764 CARD (OPTICOM) IN THE CABINET.

6. THE CONTRACTOR IS RESPONSIBLE FOR PROVIDING AND INSTALLING MIOVISION VIDEO DETECTION EQUIPMENT. THE VIDEO DETECTION CAMERAS TO BE INSTALLED ON SIGNAL POLE UPRIGHT. SEE PLANS. INSTALL ALL NECESSARY EQUIPMENT INCLUDING ALL WIRING, CAMERAS, MOUNTING HARDWARE AND ANY CONTROLLER INTERFACE EQUIPMENT NECESSARY FOR A FULLY FUNCTIONING AND OPERATIONAL VIDEO DETECTION SYSTEM. ALL EQUIPMENT SHALL BE PRE–APPROVED BY THE CITY OF PEORIA TRAFFIC ENGINEERING DIVISION PRIOR TO INSTALLATION.

7. LUMINARIES ARE TO BE LED GE ERL2 0 16 C3 30A GRAY, LF<65FT OR GE ERL2 0 23 C3 30 A GRAY, LF>65FT.

8. THE PEDESTRIAN PUSH BUTTON SHALL CONFORM TO ADOT STANDARD DRAWING TS11–1 EXCEPT THAT THE PUSH BUTTON SHALL BE A MINIMUM OF 2–INCH IN DIAMETER. THE PUSH BUTTON SHALL BE RAISED FROM THE FACE OF THE PUSH BUTTON HOUSING. THE FORCE REQUIRED TO ACTIVATE THE CONTROL SHALL BE NO GREATER THAN 5–LBS. OF FORCE. PUSH BUTTONS MUST MEET ADA REQUIREMENTS AND BE MOUNTED AT ADA REQUIRED HEIGHT. THE CONTRACTOR IS RESPONSIBLE FOR INSTALLING THE R10–3E PEDESTRIAN PUSH BUTTON SIGNS.

9. ACCESSIBLE PEDESTRIAN BUTTONS SHALL CONFORM TO THE CITY'S CURRENT STANDARDS AND CURRENT MUTCD REQUIREMENTS.

10. THE CONTRACTOR SHALL PROVIDE A 6–FOOT COILED CONTROL CORD IN THE POLICE PANEL OF THE CONTROLLER.

11. CONTRACTOR IS RESPONSIBLE FOR INSTALLATION OF THE ILLUMINATED STREET NAME SIGNS. THE SIGNS ARE TO BE FLAG MOUNTED ON THE SIGNAL POLE PER THE MANUFACTURER'S MOUNTING INSTRUCTIONS.

12. THE CONTRACTOR SHALL INSTALL A CABINET COURTESY PAD. SEE CITY OF PEORIA STANDARD DETAILS FOR SPECIFICATIONS.

13. ALL MAST ARM MOUNTED SIGNAL HEADS SHALL USE SKYBRACKET TYPE II MOUNTS, WITH THE EXCEPTION OF THE OUTSIDE MOUNTED SIGNAL HEAD WHICH WILL REQUIRE A TENON AND TYPE II MOUNT.

14. CONTRACTOR TO FURNISH AND INSTALL AN AXIS Q6075–E CCTV WITH ALL POLE MOUNTING HARDWARE.

NO.	REVISION	BY	DATE
3			
2			
1			

MARICOPA COUNTY

NORTHERN PARKWAY
103RD AVENUE TO 91ST AVENUE - PHASE 1
PROJECT NO. TT0372

	BY	DATE
DESIGNED	E. SOLEM	04/2026
DRAWN	E. SOLEM	04/2026
CHECKED	A. FREDE	04/2026

Registered Professional Engineer (Civil) CERTIFICATE NO. 79488 ALLISON R. FREDE Date Signed 04/09/26 ARIZONA, U.S.A.

BURGESS & NIPLE
1230 W. WASHINGTON ST, SUITE 511
TEMPE, AZ 85288

Contact Arizona 811 Two Working Days Before You Dig
ARIZONA811 BLUE STAKE, INC.
Call 811 or Click Arizona811.com

TRAFFIC SIGNAL CABINET & POLE SCHEDULE
NORTHERN AVE & 103RD AVE

SHEET ST04

TRACS NO.

Projects\221991.00_TT0372\600_CADD\05_Official\Dgn_PHASE 1\Sheets\B&N\TT0372_ST_Signal_103rd_02.dgn
4:55:53 PM 4/27/2026

F.H.W.A. REGION	STATE	PROJECT NO.	SHEET NO.	TOTAL SHEETS	RECORD DRAWING
9	AZ	TT0372	137	224	

CONDUCTOR SCHEDULE

	CONDUIT RUN NO. (XX)	1	2	3	4	5	6	7	8	9	10	11	12	13	14	15	16	17	18	19	20	21	22	23	24	25	26	27	28	29	30
	CONDUIT SIZE (INCH)	2½	2	2	2	3	3	3	3	3	3	3	3	2	3	2	3	2	3	2	3	3	3	2	3	2½	3	3	2	3	3
	EXISTING (E)	E	A	A	A	A	A	A	A	E	E	E	E	E	E	A	A	E	E	E	E										
	BORE (B)																					B	B				B	B			
# AWG	CIRCUIT PHASE																														
SIGNAL HEADS, PEDESTRIAN HEADS, AND PEDESTRIAN PUSH BUTTONS (IMSA) (STRANDED)	#16 IMSA 19-1, 25-CONDUCTOR																						2					2			2
	#16 IMSA 19-1, 7-CONDUCTOR																								2						
	#16 IMSA 19-1, 5-CONDUCTOR																		+1						2	2					
	#16 IMSA 19-1, 2-CONDUCTOR																								1	1					
	#8 WHITE XHHW, COMMON, STRANDED ●																						1					1			1
VIDEO DETECTION CABLE	VIDEO DETECTION CABLE (CAT5E) **											+1								+1		1		1						2	
CAT 5E CABLE	CCTV CABLE													+1																	
#8 STRANDED BLACK-HOT WHITE-NEUTRAL GREEN-EQUIPMENT GROUND	SERVICE 120/240V																												1		
	SIGNAL CABINET 120V																												1		
	GROUND																														
#10 IMSA 19-1, 4 CONDUCTOR SOLID STREET LIGHTING 240V	#14 (RED)																						1		1			1			1
	COMMON (BLACK)																												2		
#12 IMSA 19-1, 4 CONDUCTOR SOLID ILLUMINATED STREET NAME SIGN 120V	#14 (BLACK)																						1		1			1			1
	COMMON (WHITE)																												1		
#8 INSULATED XHHW	CONDUIT BOND (GREEN)																					1	1		1	1	1	1	1	1	1
PRE-EMPTION (SEE NOTE 8) ☐	FIRE PRE-EMPT POLE A																														
	FIRE PRE-EMPT POLE B																														
	FIRE PRE-EMPT POLE C																										1				
	FIRE PRE-EMPT POLE D																														
	FIRE PRE-EMPT POLE E																					2		1						4	
ITS CABLE	12-STRAND SMFO																														
	CONDUIT RUN NO. (XX)	1	2	3	4	5	6	7	8	9	10	11	12	13	14	15	16	17	18	19	20	21	22	23	24	25	26	27	28	29	30
	CONDUIT SIZE (INCH)	2½	2	2	2	3	3	3	3	3	3	3	3	2	3	2	3	2	3	2	3	3	3	2	3	2½	3	3	2	3	3
	EXISTING (E)	E	A	A	A	A	A	A	A	E	E	E	E	E	E	A	A	E	E	E	E										

SERVICE CONDUCTORS BY APS

CONDUIT BY CONTRACTOR

IMSA CABLE 25 CONDUCTOR WIRING DETAIL 19-1-16 GAGE HIGH TEMP WIRE

CABLE #1	COLOR CONDUCTOR SOLID COLOR	COLOR CONDUCTOR BASIC COLOR	COLOR CONDUCTOR TRACER STRIPE
Phase 1 EBTL Overlap A	RED	WHITE	RED ARROW
	BLACK	WHITE	YELLOW ARROW
	GREEN	WHITE	GREEN ARROW
FY Arrow	YELLOW	RED	FY ARROW
Phase 2 WBT Overlap B	RED		RED
	ORANGE		YELLOW
	GREEN		GREEN
Phase 3 SBLT Overlap C	BLACK	RED	RED ARROW
	ORANGE	RED	YELLOW ARROW
	BLUE	RED	GREEN ARROW
FY Arrow	YELLOW	BLUE	FY ARROW
Phase 4 NB Overlap D	RED	BLACK	RED
	ORANGE	BLACK	YELLOW
	GREEN	BLACK	GREEN
Phase 2 WB Pedestrian	BLUE		WALK
	BLACK		DON'T WALK
	WHITE	BLACK	PUSH BUTTON
Phase 4 NB Pedestrian	BLUE	WHITE	WALK
	RED	GREEN	DON'T WALK
	WHITE	RED	PUSH BUTTON
Common	WHITE		PB COMMON
Spare	BLUE	BLACK	SPARE
Spare	BROWN		SPARE
Spare	BROWN	WHITE	SPARE
Spare	ORANGE	GREEN	SPARE

CABLE #2	COLOR CONDUCTOR SOLID COLOR	COLOR CONDUCTOR BASIC COLOR	COLOR CONDUCTOR TRACER STRIPE
Phase 5 WBTL Overlap A	RED	WHITE	RED ARROW
	BLACK	WHITE	YELLOW ARROW
	GREEN	WHITE	GREEN ARROW
FY Arrow	YELLOW	RED	FY ARROW
Phase 6 EBT Overlap B	RED		RED
	ORANGE		YELLOW
	GREEN		GREEN
Phase 7 NBLT Overlap C	BLACK	RED	RED ARROW
	ORANGE	RED	YELLOW ARROW
	BLUE	RED	GREEN ARROW
FY Arrow	YELLOW	BLUE	FY ARROW
Phase 8 SBT Overlap D	RED	BLACK	RED
	ORANGE	BLACK	YELLOW
	GREEN	BLACK	GREEN
Phase 6 EB Pedestrian	BLUE		WALK
	BLACK		DON'T WALK
	WHITE	BLACK	PUSH BUTTON
Phase 8 SB Pedestrian	BLUE	WHITE	WALK
	RED	GREEN	DON'T WALK
	WHITE	RED	PUSH BUTTON
Common	WHITE		PB COMMON
Spare	BLUE	BLACK	SPARE
Spare	BROWN		SPARE
Spare	BROWN	WHITE	SPARE
Spare	ORANGE	GREEN	SPARE

STANDARD PHASE TAPE - STANDARD TAPE COLORS FOR THE IMSA CABLES SHOWN IN THE TABLE ABOVE SHALL BE WRAPPED ACCORDINGLY.

IMSA 2,5,7 CONDUCTOR SIGNAL HEAD WIRING DETAIL

SIGNAL HEAD	CONDUCTOR CABLE	WIRE COLOR	SIGNAL COLOR
TYPE F	IMSA 5	RED	RED
		BLACK	YELLOW
		GREEN	GREEN
		WHITE	NEUTRAL
		ORANGE	SPARE
TYPE G	IMSA 7	RED	RED ARROW
		BLACK	YELLOW ARROW
		GREEN	GREEN ARROW
		BLUE	SPARE
		ORANGE	FLASHING YELLOW ARROW
		WHITE	NEUTRAL
		WHITE/BLACK	SPARE
TYPE R	IMSA 7	RED	RED ARROW
		BLACK	YELLOW ARROW
		GREEN	GREEN ARROW
		BLUE	SPARE
		ORANGE	SPARE
		WHITE	NEUTRAL
		WHITE/BLACK	SPARE
TYPE Q	IMSA 7	RED	RED
		BLACK	YELLOW
		GREEN	GREEN
		BLUE	GREEN ARROW
		ORANGE	YELLOW ARROW
		WHITE	NEUTRAL
		WHITE/BLACK	SPARE

STANDARDIZED PHASE TAPE REQUIREMENTS

PHASE	ONE BAND 3 WRAPS EACH	TWO BANDS 3 WRAPS EACH	COLOR OF TAPE
1	X		RED
2	X		WHITE
3	X		BLUE
4	X		GREEN
5		X	RED
6		X	WHITE
7		X	BLUE
8		X	GREEN

PEDESTRIAN HEAD & BUTTON WIRE COLOR

PEDESTRIAN FEATURE	CONDUCTOR CABLE	WIRE COLOR	SIGNAL COLOR
HEAD	IMSA 5	RED	DON'T WALK
HEAD	IMSA 5	BLACK	SPARE
HEAD	IMSA 5	GREEN	WALK
HEAD	IMSA 5	WHITE	NEUTRAL
HEAD	IMSA 5	ORANGE	SPARE
BUTTON	IMSA 2	BLACK	NORM OPEN
BUTTON	IMSA 2	WHITE	COMMON

WIRE & TAPE COLOR REQUIREMENTS FOR METRO SIGNS & STREET LIGHTS

FEATURE TYPE	CONDUCTOR CABLE	WIRE COLOR	COLOR OF TAPE
STREET LIGHTS	IMSA 4	BLACK/RED	ORANGE
METRO SIGNS	IMSA 4	BLACK/WHITE	PURPLE

ALL WIRING PER CITY OF PEORIA STD DETAIL PE-085-1

LEGEND & ABBREVIATIONS

PEC	PHOTO ELECTRIC CELL
UPS	UNINTERRUPTIBLE POWER SUPPLY
IISNS	INTERNALLY ILLUMINATED STREET NAME SIGN
PPB	PEDESTRIAN PUSH BUTTON
EVPE	EMERGENCY VEHICLE PREEMPTION
CCTV	CLOSED CIRCUIT TV
SMA	SIGNAL MAST ARM
LMA	LUMINAIRE MAST ARM
FL	FLASHING YELLOW SIGNAL 'G' HEAD
A	ABANDON CONDUIT
E	EXISTING CONDUIT
B	BORE UNDER ROADWAY
**	VIDEO DETECTION - SEE NOTE 7
☐	EMERGENCY PRE-EMPTION - SEE NOTE 8
●	SIGNAL COMMON - SEE NOTE 9

CONDUCTOR SCHEDULE NOTES

1. ALL NEW WIRE SHALL BE PROVIDED AND INSTALLED BY THE CONTRACTOR.
2. THE 25-CONDUCTOR CABLE SHALL BE IMSA 19-1, 90c HI TEMP #16 AWG. THE 7, 5, AND 2-CONDUCTOR SHALL BE IMSA 19-1 #16 AWG. ALL IMSA CONDUCTORS SHALL BE SOLID.
3. THE CONTRACTOR IS RESPONSIBLE FOR PROVIDING MULTI-COLOR CONDUCTORS WHICH MEET THE COLOR CODING CRITERIA IDENTIFIED IN PEORIA STD DETAIL PE-085-1.
4. INSTALL #8 INSULATED XHHW (GREEN) IN ALL EMPTY CONDUITS.
5. THE CONTRACTOR SHALL VERIFY ALL CONDUIT AND CONDUCTOR QUANTITIES.
6. ALL CONDUITS CROSSING EXISTING PAVED ROADWAY SHALL BE INSTALLED USING HORIZONTAL DIRECTIONAL DRILLING. SEE SPECIAL PROVISIONS.
7. VIDEO DETECTION COMMUNICATION CABLE SHALL BE A SHIELDED, BURIAL GRADE, GEL-FILLED CAT5E CABLE AND GROUND THE DRAIN WIRE TO THE EPM GROUND LUG PER MANUFACTURERS SPECIFICATIONS.
8. EMERGENCY PRE-EMPTION CABLE SHALL BE 3M MODEL M138. THE CABLE SHALL RUN UNSPLICED FROM THE END OF THE TRAFFIC SIGNAL MAST ARM TO THE CONTROL CABINET.
9. ALL TRAFFIC SIGNAL COMMON CONDUCTORS SHALL USE CRIMP CONNECTIONS FOR SPLICING WITHIN THE PULL BOX.

TRAFFIC SIGNAL PANEL SCHEDULE

PANEL LOCATION: NORTHERN AVENUE & 103RD AVENUE

VOLTAGE: 120/240
PHASE, WIRES: 1ϕ, 3W
SCCR (AMPS): 22K AIC
SOURCE: APS SERVICE

PANEL BUS: 100 AMPS
MAIN: 100A BREAKER

DESCRIPTION VA	VA	CB	CKT	A	B	CKT	CB	VA	
SIGNAL LIGHTING	135	20/2	1	7.1		2	20/1	220	COMMUNICATIONS EQUIPMENT
	135		3		10.8	4	20/1	550	SIGNAL CONTROLLER
IISNS	1314	20/1	5	5.2		6	20/1	135	DUPLEX RECEPTACLE
SPARE	0	20/1	7		12	8	20/1	2000	BATTERY BACK UP
SPARE	0	20/1	9	0.0		10	20/1	0	SPARE
SPARE	0	20/1	11		0.0	12	20/1	0	SPARE
			TOTALS	12.3	22.8	AMPS			

SUBTOTAL (VA): 4624
+25% PER NEC (VA): 1156
TOTAL (VA): 5780 @ 240V, 1ϕ = 24.1 AMPS

Contact Arizona 811 Two Working Days Before You Dig
ARIZONA811 BLUE STAKE, INC.
Call 811 or Click Arizona811.com

NO.	REVISION	BY	DATE
3			
2			
1			

MARICOPA COUNTY

NORTHERN PARKWAY
103RD AVENUE TO 91ST AVENUE - PHASE 1
PROJECT NO. TT0372

	BY	DATE
DESIGNED	E. SOLEM	04/2026
DRAWN	E. SOLEM	04/2026
CHECKED	A. FREDE	04/2026

Registered Professional Engineer (Civil) CERTIFICATE NO. 79480 ALLISON R. FREDE Signed 04/30/26 ARIZONA, U.S.A.

BURGESS & NIPLE
1230 W. WASHINGTON ST. SUITE 511
TEMPE, AZ 85288

CONDUCTOR SCHEDULE
NORTHERN AVE & 103RD AVE

SHEET ST05

TRACS NO.

4:56:57 PM 4/27/2026
Projects\221991.00_TT0372\600_CADD\05_Official\Dgn_PHASE 1\Sheets\B&N\TT0372_ST_Signal_103rd_03.dgn

F.H.W.A. REGION	STATE	PROJECT NO.	SHEET NO.	TOTAL SHEETS	RECORD DRAWING
9	AZ	TT0372	138	224	

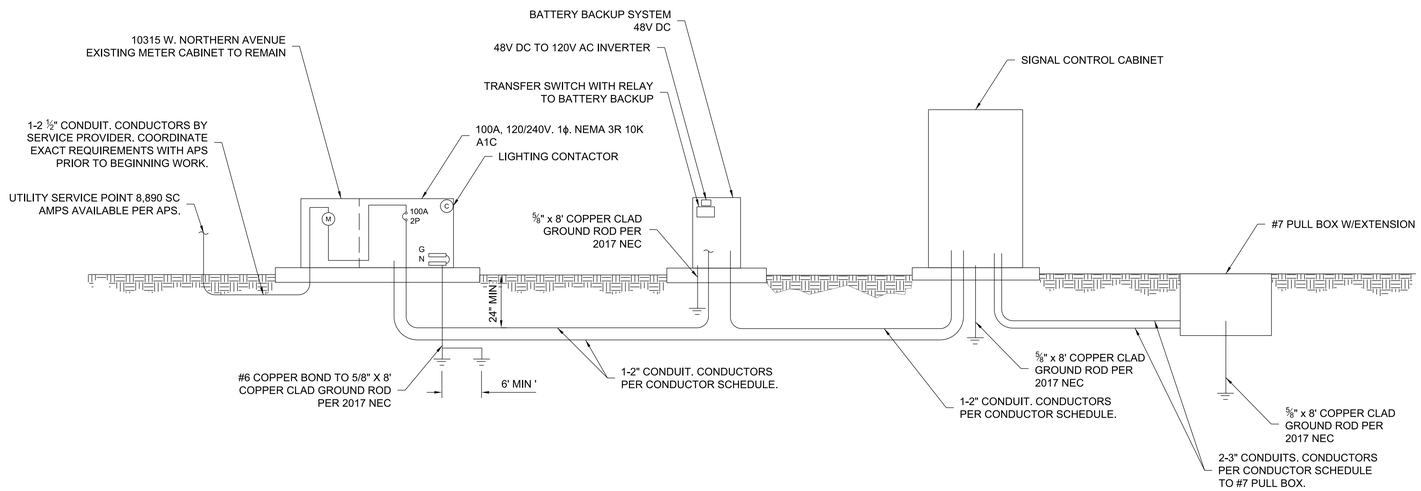

CITY OF PEORIA STANDARD DETAIL PE-081-2
SINGLE LINE DIAGRAM

NOT TO SCALE

Contact Arizona 811 Two Working Days Before You Dig
ARIZONA811 BLUE STAKE, INC.
Call 811 or Click Arizona811.com

NO.	REVISION	BY	DATE
3			
2			
1			

MARICOPA COUNTY

NORTHERN PARKWAY
103RD AVENUE TO 91ST AVENUE - PHASE 1
PROJECT NO. TT0372

	BY	DATE
DESIGNED	E. SOLEM	04/2026
DRAWN	E. SOLEM	04/2026
CHECKED	A. FREDE	04/2026

Registered Professional Engineer (Civil)
CERTIFICATE NO. 79480
ALLISON R. FREDE
Date Signed 04/30/26
ARIZONA, U.S.A.

BURGESS & NIPLE
1230 W. WASHINGTON ST. SUITE 511
TEMPE, AZ 85288

TRAFFIC SIGNAL DETAIL
SINGLE LINE DIAGRAM

SHEET
ST06

TRACS NO.

Projects\221991.00_TT0372\600_CADD\05_Official\Dgn_PHASE 1\Sheets\B&N\TT0372_ST_Signal_Detail_01.dgn

10:27:48 PM4/22/2026

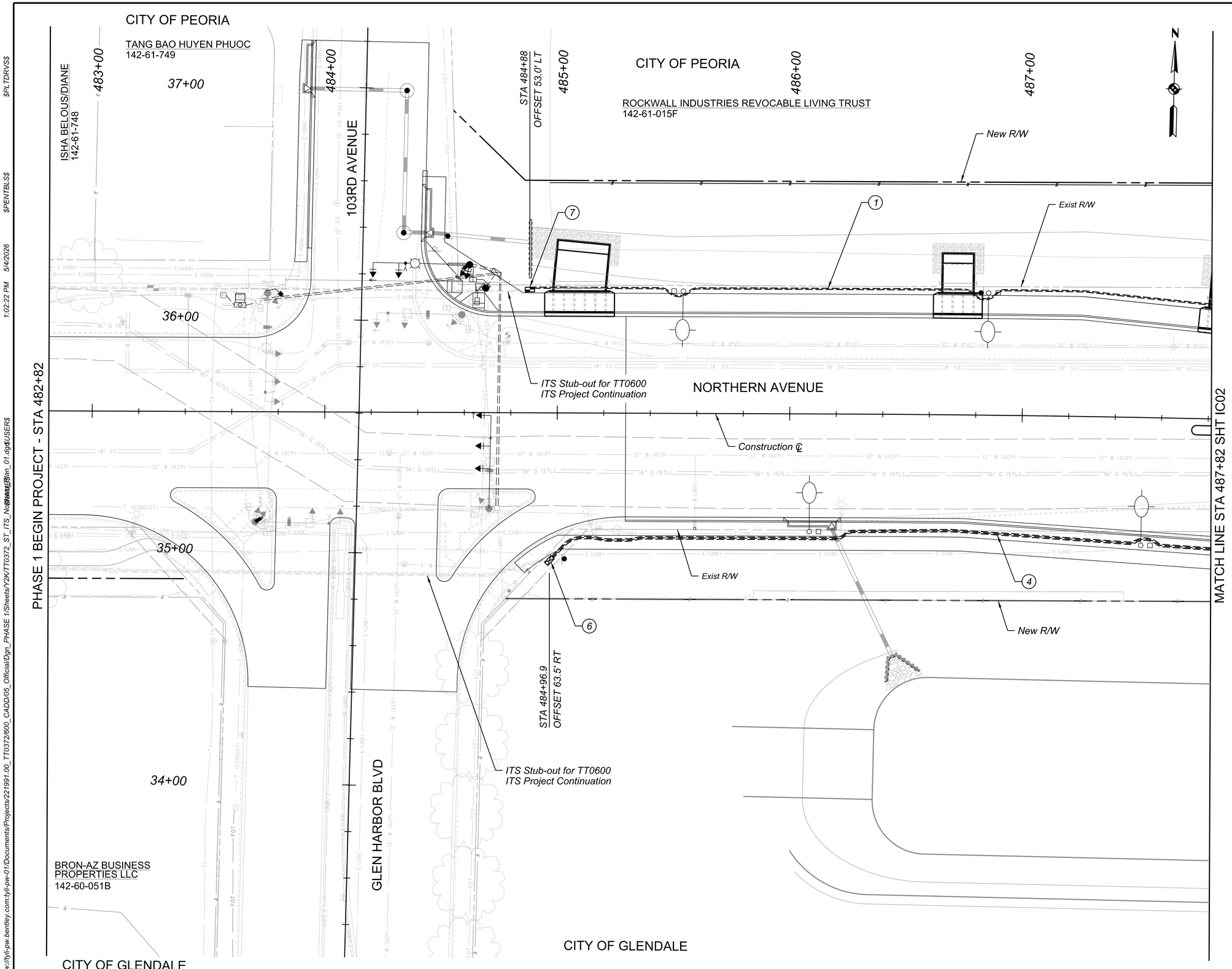

F.H.W.A. REGION	STATE	PROJECT NO.	SHEET NO.	TOTAL SHEETS	RECORD DRAWING
9	AZ	TT0372	139	224	

☐ REMOVAL / RELOCATE ☐

○ CONSTRUCTION ○

(1) Furnish and Install Quad-Duct and Fiber
(City of Peoria Det PE-70)

Quad-Duct	300 LF
144 Strand SMFO	300 LF

(4) Furnish and Install ITS Conduit
(Modfied MCDOT Det 4801)

(3) 3" Sch 40 PVC Conduit	300 LF
144 Strand SMFO	300 LF

(6) Furnish and Install MCDOT ITS Pull Box w/ Ext (MCDOT Det 4805-2) — 1 EA

(7) Furnish and Install Peoria ITS #9 Vault (City of Peoria Det PE-073) — 1 EA

NOTE: ITS conduit shown schematically. See Joint Trench Details on Sheet IC06 for ITS and Street Lighting Conduit Trenching and construction notes.

◇ BY OTHERS ◇

SCALE: Hor: 1"=20'
Vert: NA

20 0 20 40
SCALE IN FEET

Contact Arizona 811 Two Working Days Before You Dig
Call 811 or Click Arizona811.com

NO.	REVISION	BY	DATE
3			
2			
1			

MARICOPA COUNTY

NORTHERN PARKWAY
103RD AVENUE TO 91ST AVENUE - PHASE 1
PROJECT NO. TT0372

	BY	DATE
DESIGNED	R. NEIFFER	05/2026
DRAWN	N. NEIFFER	05/2026
CHECKED	C. WILLIAMS	05/2026

Registered Professional Engineer (Civil) 42636 CHRISTOPHER B. WILLIAMS 5-5-26 Date Signed ARIZONA, U.S.A.

Y2K ENGINEERING
1921 S. Alma School Rd, Suite 204
Mesa, Arizona 85210
www.y2keng.com

NORTHERN AVENUE - ITS PLAN
STA 482+82 to 487+82

SHEET IC01

TRACS NO.

$PLTDRVS$ $PENTBL$$ 1:02:22 PM 5/4/2026 pw://tyli-pw.bentley.com:tyli-pw-01/Documents/Projects/221991.00_TT0372/600_CADD/05_Official/Dgn_PHASE 1/Sheets/Y2K/TT0372_ST_ITS_NorthernPlan_01.dgn$USER$

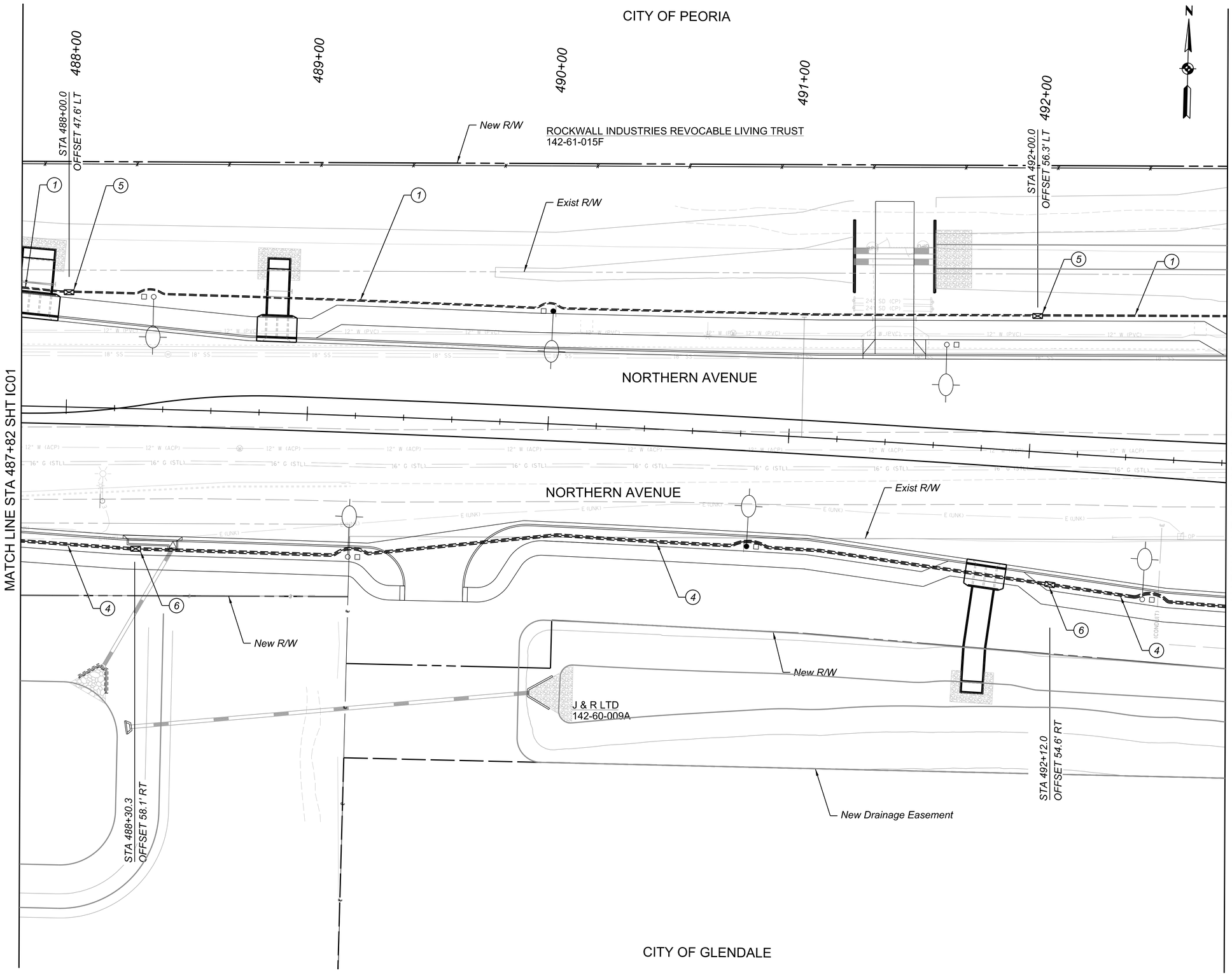

F.H.W.A. REGION	STATE	PROJECT NO.	SHEET NO.	TOTAL SHEETS	RECORD DRAWING
9	AZ	TT0372	140	224	

☐ *REMOVAL / RELOCATE* ☐

◯ *CONSTRUCTION* ◯

1. *Furnish and Install Quad-Duct and Fiber (City of Peoria Det PE-70)*
   - *Quad-Duct* — *500 LF*
   - *144 Strand SMFO* — *500 LF*
4. *Furnish and Install ITS Conduit (Modfied MCDOT Det 4801)*
   - *(3) 3" Sch 40 PVC Conduit* — *500 LF*
   - *144 Strand SMFO* — *500 LF*
5. *Furnish and Install Peoria ITS Pull Box w/ Ext (City of Peoria Det PE-071)* — *2 EA*
6. *Furnish and Install MCDOT ITS Pull Box w/ Ext (MCDOT Det 4805-2)* — *2 EA*

NOTE: ITS conduit shown schematically. See Joint Trench Details on Sheet IC06 for ITS and Street Lighting Conduit Trenching and construction notes.

◇ BY OTHERS ◇

SCALE: Hor: 1"=20'
Vert: NA

20 0 20 40
SCALE IN FEET

Contact Arizona 811 Two Working Days Before You Dig
ARIZONA811 BLUE STAKE, INC.
Call 811 or Click Arizona811.com

NO.	REVISION	BY	DATE
3			
2			
1			

MARICOPA COUNTY

NORTHERN PARKWAY
103RD AVENUE TO 91ST AVENUE - PHASE 1
PROJECT NO. TT0372

	BY	DATE
DESIGNED	R. NEIFFER	05/2026
DRAWN	N. NEIFFER	05/2026
CHECKED	C. WILLIAMS	05/2026

Registered Professional Engineer (Civil) CERTIFICATE NO. 42636 CHRISTOPHER B. WILLIAMS Date Signed 5-5-26 ARIZONA, U.S.A.

Y2K ENGINEERING
1921 S. Alma School Rd, Suite 204
Mesa, Arizona 85210
www.y2keng.com

NORTHERN AVENUE - ITS PLAN
STA 487+82 TO 492+82

SHEET IC02

TRACS NO.

$PLTDRVS$ $PENTBL$$ 1:02:33 PM 5/4/2026 pw://tyli-pw.bentley.com:tyli-pw-01/Documents/Projects/221991.00_TT0372/600_CADD/05_Official/Dgn_PHASE 1/Sheets/Y2K/TT0372_ST_ITS_Northern_02.dgn$USERS$

pw://tyli-pw.bentley.com:tyli-pw-01/Documents/Projects/221991.00_TT0372/600_CADD/05_Official/Dgn_PHASE 1/Sheets/Y2K/TT0372_ST_ITS_NorthernPlan_03.dgn$USERS$ 1:02:42 PM 5/4/2026 $PENTBL$$ $PLTDRVS$

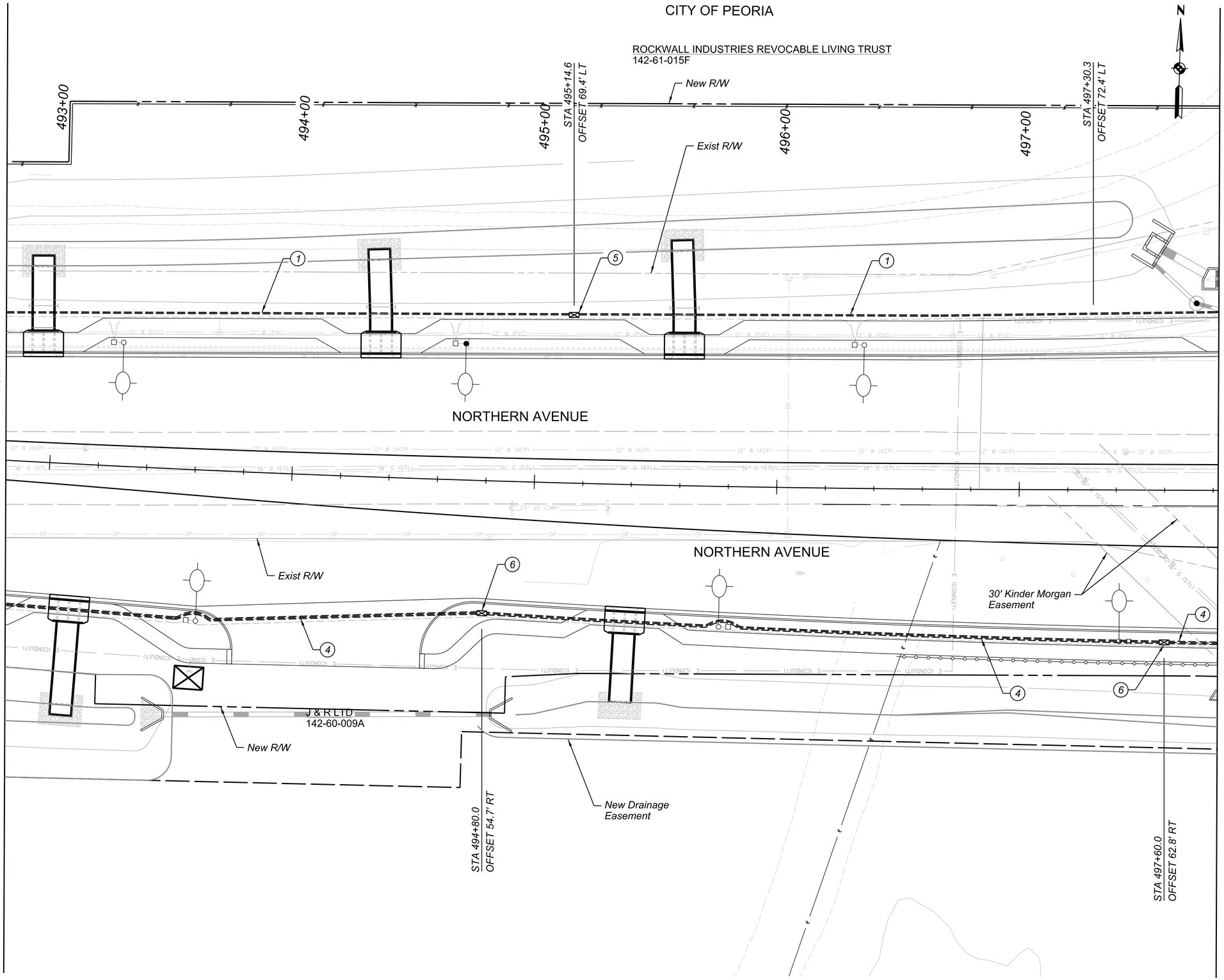

F.H.W.A. REGION	STATE	PROJECT NO.	SHEET NO.	TOTAL SHEETS	RECORD DRAWING
9	AZ	TT0372	141	224	

☐ *REMOVAL / RELOCATE* ☐

○ *CONSTRUCTION* ○

1. *Furnish and Install Quad-Duct and Fiber (City of Peoria Det PE-70)*
   - *Quad-Duct* — *500 LF*
   - *144 Strand SMFO* — *500 LF*
4. *Furnish and Install ITS Conduit (Modfied MCDOT Det 4801)*
   - *(3) 3" Sch 40 PVC Conduit* — *500 LF*
   - *144 Strand SMFO* — *500 LF*
5. *Furnish and Install Peoria ITS Pull Box w/ Ext (City of Peoria Det PE-071)* — *1 EA*
6. *Furnish and Install MCDOT ITS Pull Box w/ Ext (MCDOT Det 4805-2)* — *2 EA*

NOTE: ITS conduit shown schematically. See Joint Trench Details on Sheet IC06 for ITS and Street Lighting Conduit Trenching and construction notes.

◇ BY OTHERS ◇

SCALE: Hor: 1"=20'
Vert: NA

20 0 20 40
SCALE IN FEET

Contact Arizona 811 Two Working Days Before You Dig
ARIZONA811 BLUE STAKE, INC.
Call 811 or Click Arizona811.com

NO.	REVISION	BY	DATE
3			
2			
1			

MARICOPA COUNTY

NORTHERN PARKWAY
103RD AVENUE TO 91ST AVENUE - PHASE 1
PROJECT NO. TT0372

	BY	DATE
DESIGNED	R. NEIFFER	05/2026
DRAWN	N. NEIFFER	05/2026
CHECKED	C. WILLIAMS	05/2026

Registered Professional Engineer (Civil) CERTIFICATE NO. 42636 CHRISTOPHER B. WILLIAMS Date Signed 5-5-26 ARIZONA, U.S.A.

Y2K ENGINEERING
1921 S. Alma School Rd, Suite 204
Mesa, Arizona 85210
www.y2keng.com

NORTHERN AVENUE - ITS PLAN
STA 492+82 TO 497+82

SHEET IC03

TRACS NO.

pw://tyli-pw.bentley.com:tyli-pw-01/Documents/Projects/221991.00_TT0372/600_CADD/05_Official/Dgn_PHASE 1/Sheets/Y2K/TT0372_ST_ITS_NorthernPlan_04.dgn$USERS$ $PLTDRVS$ $PENTBL$$ 1:02:52 PM 5/4/2026

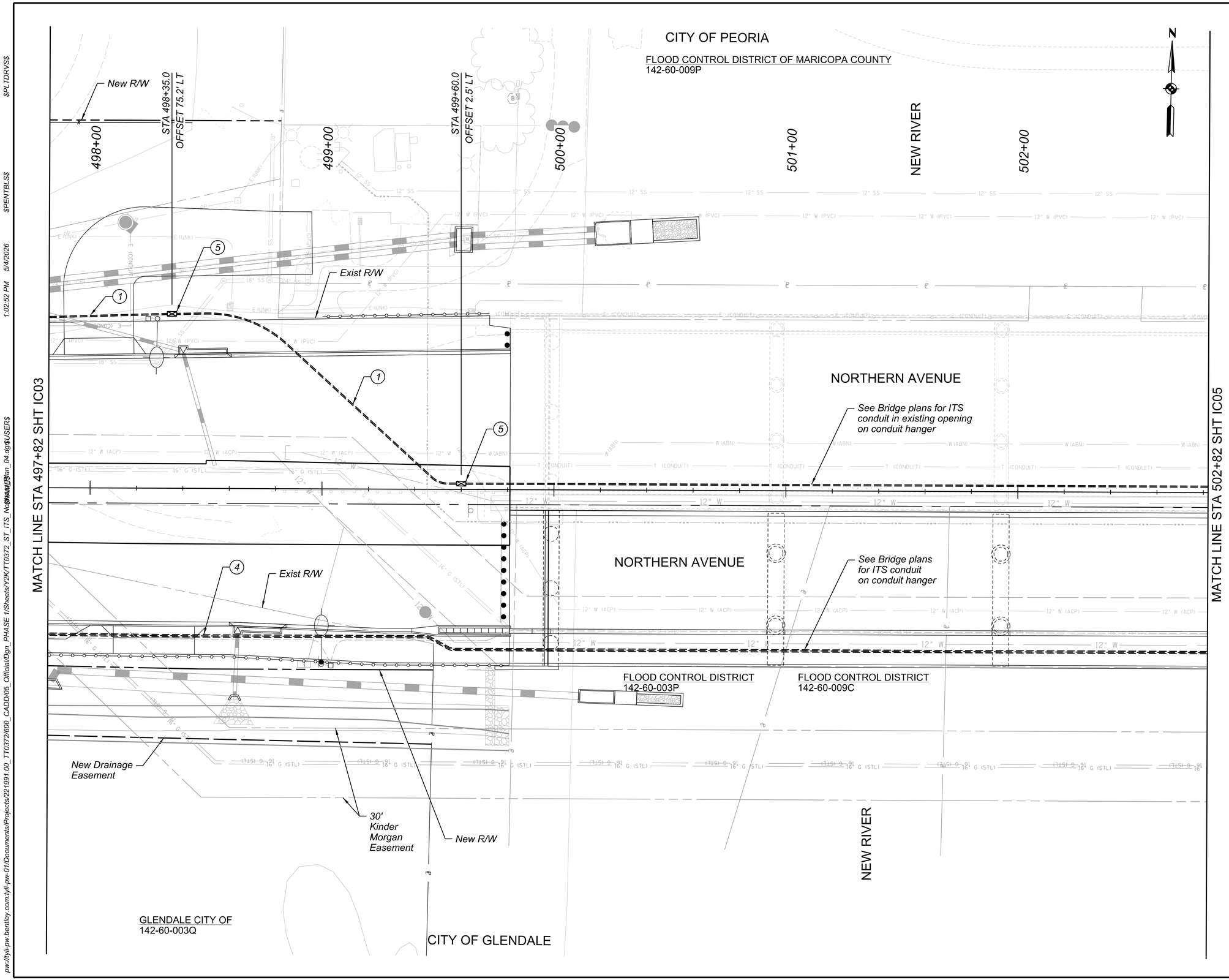

F.H.W.A. REGION	STATE	PROJECT NO.	SHEET NO.	TOTAL SHEETS	RECORD DRAWING
9	AZ	TT0372	142	224	

☐ *REMOVAL / RELOCATE* ☐

○ *CONSTRUCTION* ○

1. *Furnish and Install Quad-Duct and Fiber (City of Peoria Det PE-70)*
   - *Quad-Duct* — *500 LF*
   - *144 Strand SMFO* — *500 LF*
4. *Furnish and Install ITS Conduit (Modfied MCDOT Det 4801)*
   - *(3) 3" Sch 40 PVC Conduit* — *500 LF*
   - *144 Strand SMFO* — *500 LF*
5. *Furnish and Install Peoria ITS Pull Box w/ Ext (City of Peoria Det PE-071)* — *2 EA*

NOTE: ITS conduit shown schematically. See Joint Trench Details on Sheet IC06 for ITS and Street Lighting Conduit Trenching and construction notes.

◇ BY OTHERS ◇

SCALE: Hor: 1"=20'
Vert: NA

20 0 20 40
SCALE IN FEET

Contact Arizona 811 Two Working Days Before You Dig
ARIZONA811 BLUE STAKE, INC.
Call 811 or Click Arizona811.com

NO.	REVISION	BY	DATE
3			
2			
1			

MARICOPA COUNTY

NORTHERN PARKWAY
103RD AVENUE TO 91ST AVENUE - PHASE 1
PROJECT NO. TT0372

	BY	DATE
DESIGNED	R. NEIFFER	05/2026
DRAWN	N. NEIFFER	05/2026
CHECKED	C. WILLIAMS	05/2026

Registered Professional Engineer (Civil) CERTIFICATE NO. 42636 CHRISTOPHER B. WILLIAMS Date Signed 5-5-26 ARIZONA, U.S.A.

Y2K ENGINEERING
1921 S. Alma School Rd, Suite 204
Mesa, Arizona 85210
www.y2keng.com

NORTHERN AVENUE - ITS PLAN
STA 497+82 TO 502+82

SHEET IC04

TRACS NO.

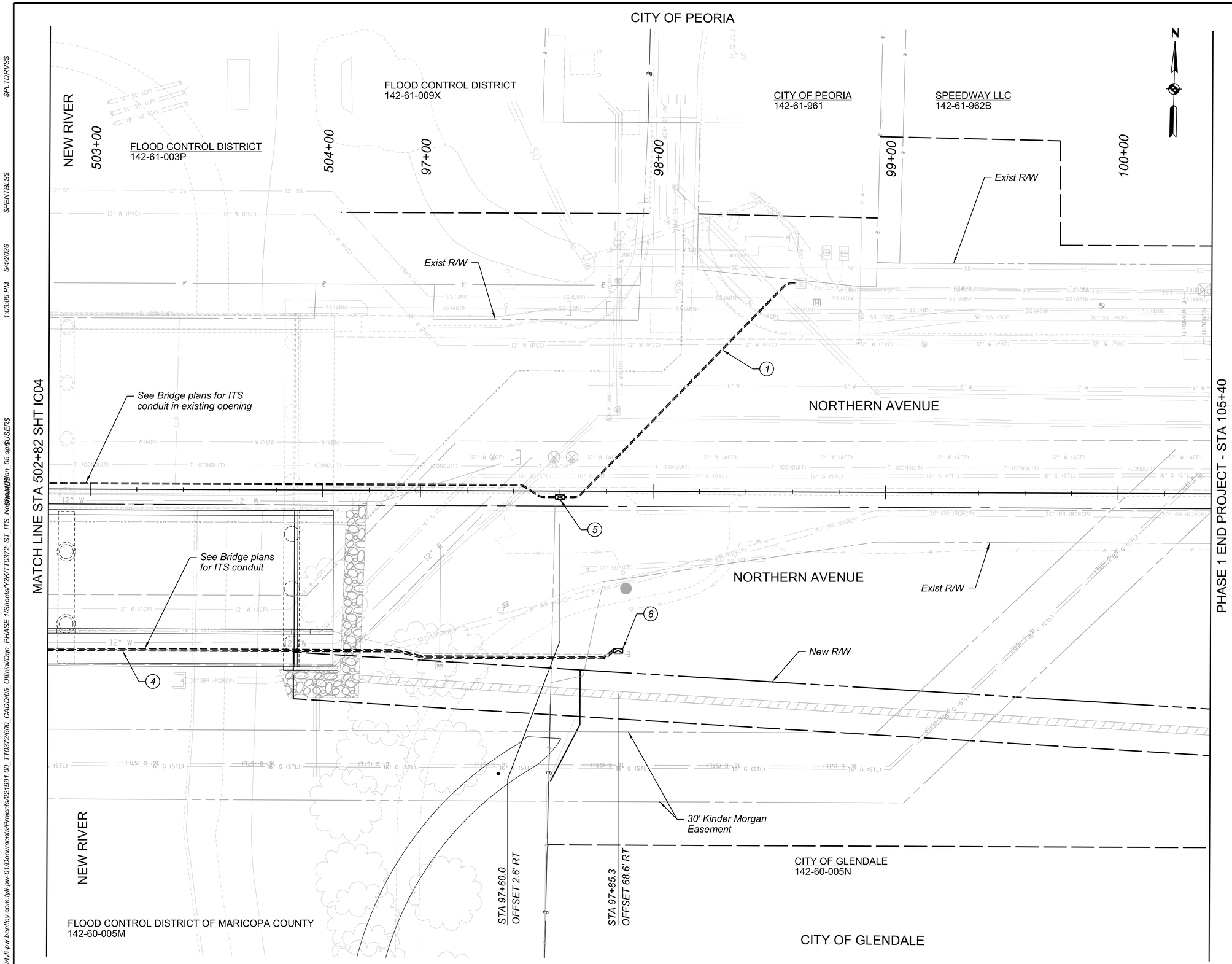

F.H.W.A. REGION	STATE	PROJECT NO.	SHEET NO.	TOTAL SHEETS	RECORD DRAWING
9	AZ	TT0372	143	224	

☐ REMOVAL / RELOCATE ☐

◯ CONSTRUCTION ◯

(1) Furnish and Install Quad-Duct and Fiber (City of Peoria Det PE-70)

Quad-Duct	500 LF
144 Strand SMFO	500 LF

(4) Furnish and Install ITS Conduit (Modfied MCDOT Det 4801)

(3) 3" Sch 40 PVC Conduit	250 LF
144 Strand SMFO	250 LF

(5) Furnish and Install Peoria ITS Pull Box w/ Ext (City of Peoria Det PE-071) — 1 EA

(8) Furnish and Install MCDOT ITS #9 Vault (MCDOT Det 4806-1) — 1 EA

NOTE: ITS conduit shown schematically. See Joint Trench Details on Sheet IC06 for ITS and Street Lighting Conduit Trenching and construction notes.

◇ BY OTHERS ◇

SCALE: Hor: 1"=20'
Vert: NA

20 0 20 40
SCALE IN FEET

Contact Arizona 811 Two Working Days Before You Dig
Call 811 or Click Arizona811.com

NO.	REVISION	BY	DATE
3			
2			
1			

MARICOPA COUNTY

NORTHERN PARKWAY
103RD AVENUE TO 91ST AVENUE - PHASE 1
PROJECT NO. TT0372

	BY	DATE
DESIGNED	R. NEIFFER	05/2026
DRAWN	N. NEIFFER	05/2026
CHECKED	C. WILLIAMS	05/2026

Registered Professional Engineer (Civil) CERTIFICATE NO. 42636 CHRISTOPHER B. WILLIAMS Date Signed 5-5-26 ARIZONA, U.S.A.

Y2K ENGINEERING
1921 S. Alma School Rd, Suite 204
Mesa, Arizona 85210
www.y2keng.com

NORTHERN AVENUE - ITS PLAN
STA 502+82 TO 105+40

SHEET IC05

TRACS NO.

$PLTDRVS$ $PENTBL$$ 1:03:05 PM 5/4/2026 pw://tyli-pw.bentley.com:tyli-pw-01/Documents/Projects/221991.00_TT0372/600_CADD/05_Official/Dgn_PHASE 1/Sheets/Y2K/TT0372_ST_ITS_Northern_Plan_05.dgn$USERS$

F.H.W.A. REGION	STATE	PROJECT NO.	SHEET NO.	TOTAL SHEETS	RECORD DRAWING
9	AZ	TT0372	144	224	

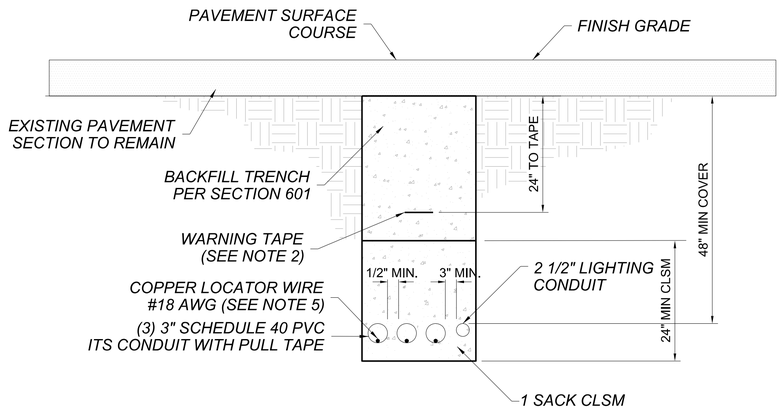

MCDOT TRENCH SECTION A

(PAVED)

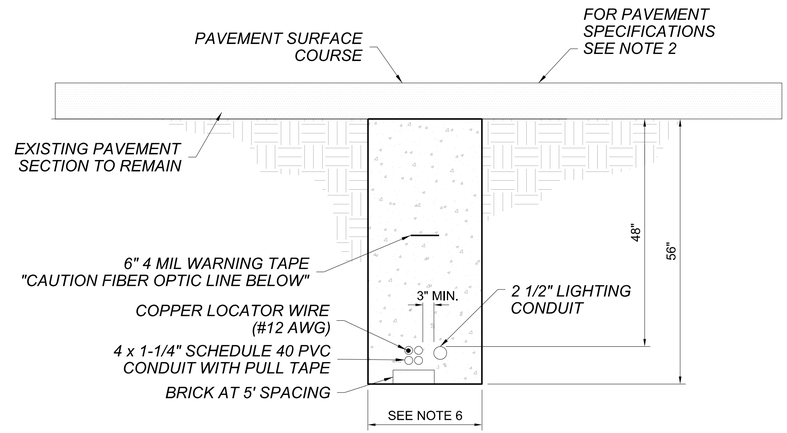

PEORIA TRENCH SECTION C

(PAVED)

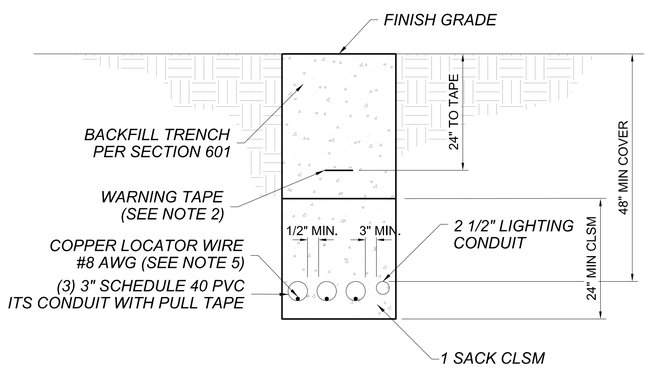

MCDOT TRENCH SECTION B

(UNPAVED)

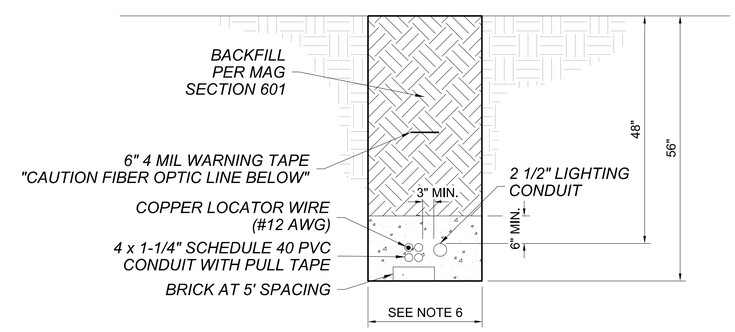

PEORIA TRENCH SECTION D

(UNPAVED)

MCDOT TRENCH SECTION NOTES

1. *PULL TAPE SHALL BE INSTALLED IN ALL EMPTY CONDUITS AND ALL UNOCCUPIED INNERDUCT CELLS.*
2. *WARNING TAPE SHALL BE CENTERED OVER CONDUITS AND INSTALLED AT A DEPTH OF 24" FROM FINISHED GRADE. TAPE SHALL MEET THE REQUIREMENTS OF SECTION 481.2.8.*
3. *AFTER COMPLETION OF TRENCH BACKFILL, CONDUIT SHALL BE BLOWN OUT WITH COMPRESSED AIR AND HAVE A METAL DISK MANDREL 90% OF THE INSIDE DIAMETER (80% FOR HDPE) OF THE CONDUIT PULLED THROUGH THE CONDUIT PRIOR TO ACCEPTANCE.*
4. *CONDUIT ALIGNMENT OFFSETS ARE TO BE ACCOMPLISHED BY A UNIFORM RATE OF CONDUIT DEFLECTION OVER A DISTANCE EQUAL TO OR GREATER THAN TEN (10) TIMES THE OFFSET DISTANCE.*
5. *BAREBOND #8 AWG WIRE SHALL BE INSTALLED CONTINUOUSLY UNSPLICED IN ALL CONDUITS TO ESTABLISH AN UNBROKEN PATH FOR LOCATING PURPOSES.*

PEORIA TRENCH SECTION NOTES

1. *TRENCH SHALL BE A MINIMUM DEPTH OF 56-INCHES AND SHALL HAVE A MINUMUM COVER OF 48-INCHES OVER PVC CONDUITS.*
2. *REFER TO MAG SECTION 336 AND MAG DETAIL 200 FOR PAVEMENT MATCHING AND SURFACE REPLACEMENT.*
3. *BORING IS REQUIRED TO CROSS ALL EXISTING ROADWAYS AND DRIVEWAYS UNLESS NEW PAVEMENT WILL BE INSTALLED WITH THE PROJECT.*
4. *IF THE CONDUIT ROUTING CROSSES AN EXISTING PORTLAND CEMENT CONCRETE DRIVEWAY, THE CONDUITS SHALL BE PLACED BY BORING.*
5. *ALL CONDUIT BENDS SHALL BE CONCRETE ENCASED FOR A MINIMUM OF TWO (2) FEET BEYOND EACH END OF THE BEND.*
6. *TRENCH WIDTH MAY NOMINALLY VARY FROM 18" TO 22" BUT SHALL NOT EXCEED 24" IN WIDTH.*
7. *A SINGLE CONTINUOUS INSULATED COPPER LOCATOR WIRE (#12 AWG) SHALL BE INSTALLED INSIDE ONE OF THE CONDUITS ALONG THE ENTIRE LENGTH OF THE CONDUIT RUN. WIRE SHALL HAVE A 5' SERVICE LOOP IN EACH PULL BOX. CRIMP A PIGTAIL TO LID. A CRIMPED SPLICE IS REQUIRED IN ALL THE PULL BOXES AND NOT IN THE CONDUIT RUN.*
8. *FLAT WOVEN POLYESTER MULE TAPE WITH 2500 POUND TENSILE STRENGTH SHALL BE INSTALLED ALONG THE ENTIRE LENGTH OF THE CONDUIT RUN FOR ALL CONDUITS THAT DO NOT HAVE A LOCATOR WIRE.*
9. *CONTRACTOR SHALL MAINTAIN A 10:1 VARIANCE OF THE CONDUIT ALIGNMENT DURING INSTALLATION.*
10. *CONDUIT SPACERS AT 3 PER 20', AND 2' FROM ANY DIRECTION CHANGE OR JOINT.*
11. *ITS CONDUITS TO BE LOCATED WITHIN THE ROW. PREFERRED LOCATION IS BACK OF SIDEWALK IF RIGHT-OF-WAY PERMITS.*
12. *AC MIX AND SOURCE OF MATERIALS SHALL BE APPROVED BY THE CITY PRIOR TO INSTALL. APPROVED AC MIX MATERIALS CAN BE DOWNLOADED FROM THE CITY'S WEB SITE.*

ITS CONDUITS ARE SHOWN SCHEMATICALLY ON PLANS IN THE APPROXIMATE LOCATION TO MAINTAIN PLAN CLARITY. ITS CONDUITS SHOULD BE INSTALLED IN A JOINT TRENCH PER THE DETAILS ON THIS SHEET WHEREVER APPLICABLE AND FEASIBLE. CONTRACTOR SHALL FIELD LOCATE THE PROPOSED ITS CONDUIT TO DETERMINE THE BEST ALIGNMENT BETWEEN PULLBOXES TO AVOID CONFLICTS WITH PROPOSED AND EXISTING UTILITIES AND INFRASTRUCTURE IMPROVEMENTS. ALL ITS CONDUIT DEFLECTIONS AND SWEEPS SHALL BE IN ACCORDANCE WITH THE DETAIL NOTES ON THIS SHEET AND/OR MANUFACTURER'S SPECIFICATIONS.

ITS CONDUIT - CONSTRUCTION NOTE

Contact Arizona 811 Two Working Days Before You Dig
ARIZONA811 BLUE STAKE, INC.
Call 811 or Click Arizona811.com

NO.	REVISION	BY	DATE
3			
2			
1			

MARICOPA COUNTY

NORTHERN PARKWAY
103RD AVENUE TO 91ST AVENUE - PHASE 1
PROJECT NO. TT0372

	BY	DATE
DESIGNED	R. NEIFFER	05/2026
DRAWN	N. NEIFFER	05/2026
CHECKED	C. WILLIAMS	05/2026

REGISTERED PROFESSIONAL ENGINEER (CIVIL) 42636 CHRISTOPHER B. WILLIAMS 5-5-26 date signed ARIZONA, U.S.A.

Y2K ENGINEERING
1921 S. Alma School Rd, Suite 204
Mesa, Arizona 85210
www.y2keng.com

ITS JOINT TRENCH DETAIL

SHEET IC06

TRACS NO.

$PLTDRVS$ $PENTBLS$ 1:03:14 PM 5/4/2026 $USER$ $DWGNAME$
pw://tyli-pw.bentley.com:tyli-pw-01/Documents/Projects/221991.00_TT0372/600_CADD/05_Official/Dgn_PHASE 1/Sheets/Y2K/TT0372_ST_ITS_Detail.dgn

F.H.W.A. REGION	STATE	PROJECT NO.	SHEET NO.	TOTAL SHEETS	RECORD DRAWING
9	AZ	TT0372	145	224	

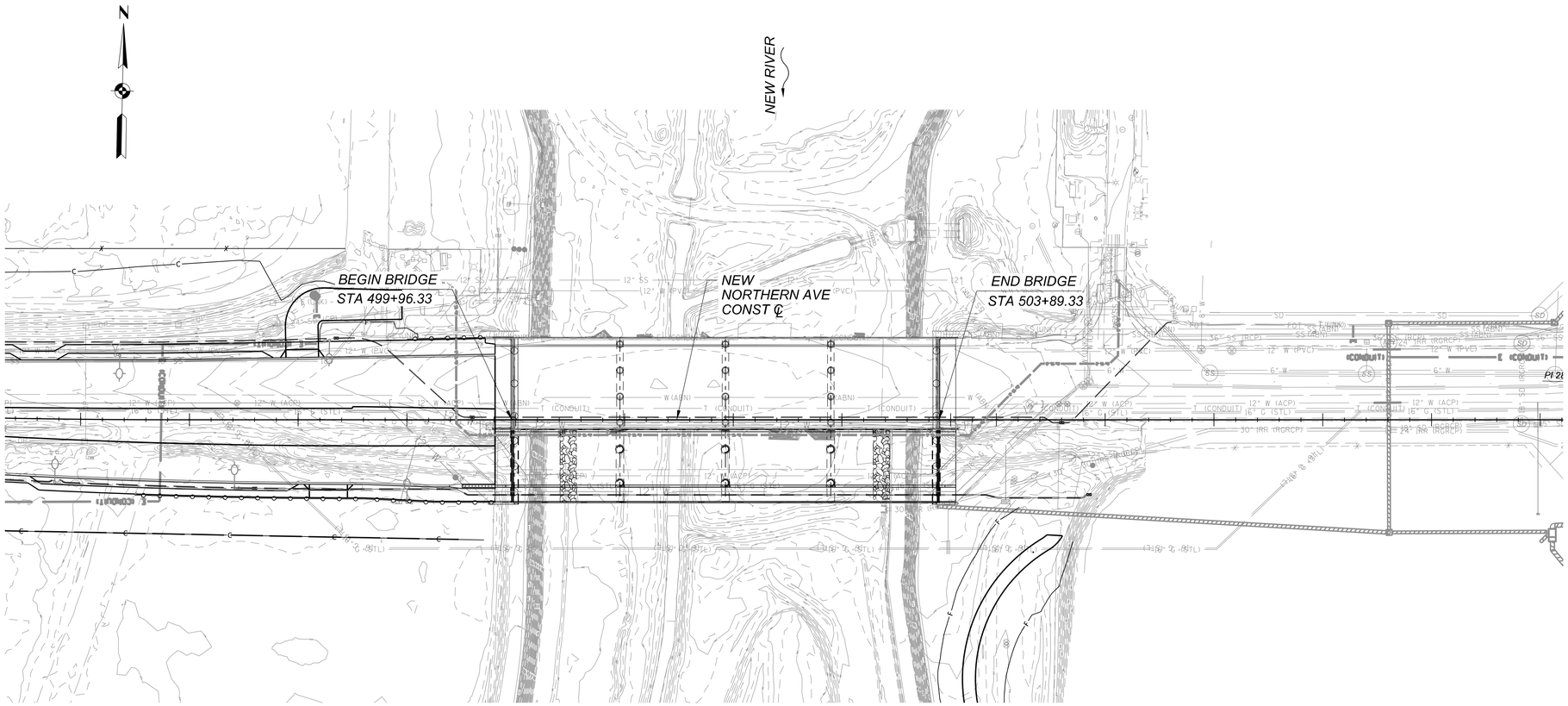

LOCATION PLAN
SCALE: 1"=60'-0"

SHEET INDEX

TITLE	SHEET NO.
LOCATION PLAN & SHEET INDEX	SB01
GENERAL PLAN & ELEVATION	SB02
TYPICAL SECTION	SB03
GENERAL NOTES & QUANTITIES	SB04
STR EXC & BACKFILL LIMITS	SB05
FOUNDATION LAYOUT	SB06
DRILLED SHAFT DETAILS	SB07
ABUTMENT 1 PLAN & ELEVATION	SB08
ABUTMENT 2 PLAN & ELEVATION	SB09
ABUTMENT DETAILS 1	SB10
ABUTMENT DETAILS 2	SB11
ABUTMENT DETAILS 3	SB12
WINGWALL DETAILS	SB13
PIER PLAN & ELEVATION	SB14
PIER DETAILS 1	SB15
PIER DETAILS 2	SB16
FRAMING PLAN	SB17
GIRDER DETAILS 1	SB18
GIRDER DETAILS 2	SB19
GIRDER DETAILS 3	SB20
DECK PLAN	SB21
DECK SECTION & REINFORCING	SB22
SUPERSTRUCTURE DETAILS	SB23
ABUTMENT DIAPHRAGM DETAILS	SB24
PIER DIAPHRAGM DETAILS	SB25
DIAPHRAGM SECTION DETAILS 1	SB26
DIAPHRAGM SECTION DETAILS 2	SB27
EXPANSION JOINT DETAILS	SB28
BEARING PAD & RESTRAINER DETAILS	SB29
CONSTRUCTION SEQUENCE	SB30
CAMBER DETAILS	SB31
SCREED ELEVATIONS	SB32
AESTHETIC RAIL DETAILS 1	SB33
AESTHETIC RAIL DETAILS 2	SB34
AESTHETIC RAIL DETAILS 3	SB35

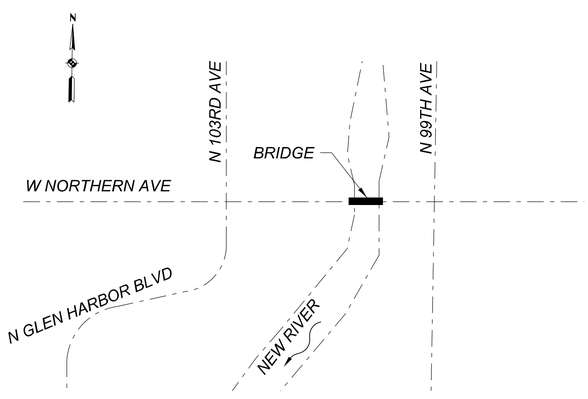

KEY MAP
NOT TO SCALE

LEGEND:

DETAIL MARKER — 1 / SBxx — DETAIL NUMBER / SHEET NUMBER

SECTION MARKER — A / SBxx — SECTION LETTER / SHEET NUMBER

NOTES:

A LINE (—) IN PLACE OF THE DRAWING NUMBER INDICATES THAT THE SECTION OR DETAIL IS LOCATED ON THE SAME DRAWING THAT THE SECTION OR DETAIL IS CUT.

Contact Arizona 811 Two Working Days Before You Dig
Call 811 or Click Arizona811.com

NO.	REVISION	BY	DATE
3			
2			
1			

MARICOPA COUNTY

NORTHERN PARKWAY
103RD AVENUE TO 91ST AVENUE - PHASE 1
PROJECT NO. TT0372

	BY	DATE
DESIGNED	AO	04/2026
DRAWN	BR	04/2026
CHECKED	KLH	04/2026

Registered Professional Engineer (Civil) CERTIFICATE NO. 37868 KODI-LIM HOE Date Signed 4/29/2026 ARIZONA, U.S.A.

TYLin

LOCATION PLAN & SHEET INDEX

SHEET SB01

TRACS NO.

c:\bms\tyli-pw\brandon.rudolph@tylin.com\d0573062\TT0372_SB_NewRiver_01lp.dgn
Brandon Rudolph OpenRoads_Imperial 3:41:11 PM 4/29/2026 MCDOT_TYLIN_HALF_PRINT.tbl TYLI_GN_bwpdf Half.pltcfg

F.H.W.A. REGION	STATE	PROJECT NO.	SHEET NO.	TOTAL SHEETS	RECORD DRAWING
9	AZ	TT0372	146	224	

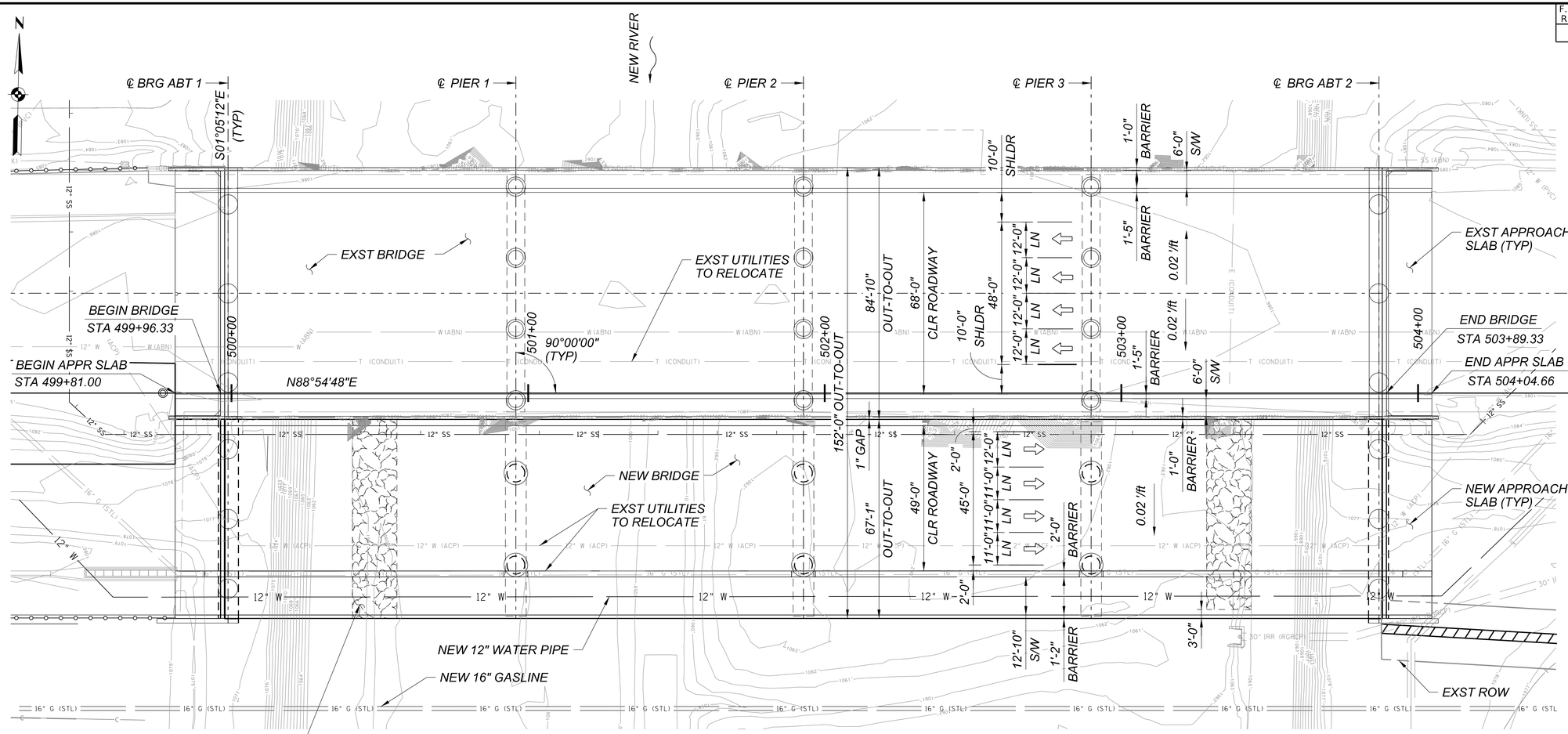

GENERAL PLAN

4-SPAN PRECAST PRESTRESSED UBT50 CONCRETE GIRDER BRIDGE
NO SKEW
SCALE: 1"=20'-0"

HYDRAULIC DATA

EVENT	50 YR	100 YR	500 YR
WSE (ft)	1072.91	1074.61	1078.61
V (fps)	8.02	9.76	12.43
Q (cfs)	31,000	41,000	69,000
PIER SCOUR EL	N/A	1028.97	1023.77
ABT 1 SCOUR EL	N/A	N/A	1023.77
ABT 2 SCOUR EL	N/A	N/A	1023.77

WSE = WATER SURFACE ELEVATION
V = VELOCITY OF FLOW
Q = WATER FLOW
REFER TO HYRDAULIC REPORT

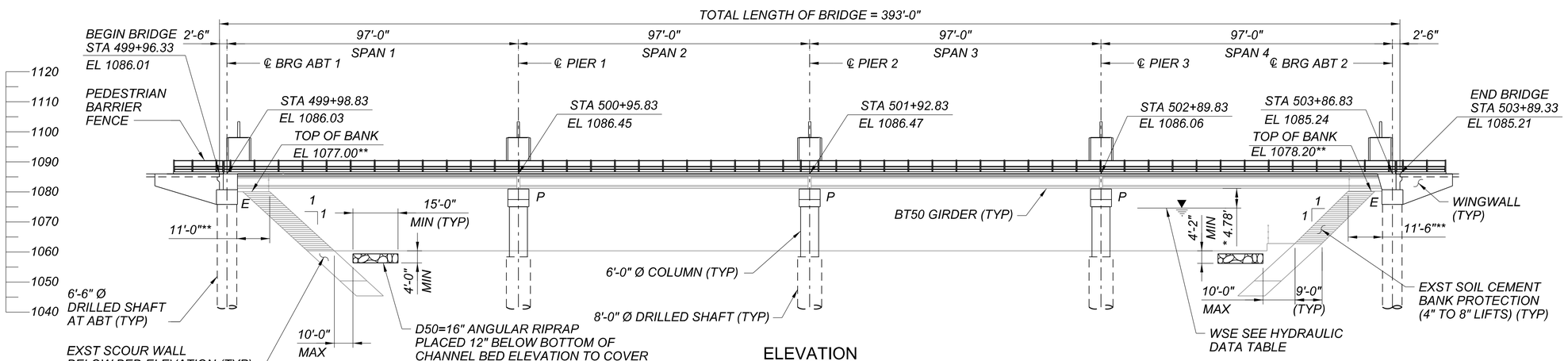

ELEVATION

(ELEVATIONS TAKEN AT NEW NORTHERN CONSTR ℄)
SCALE: 1"=20'-0"

* MIN FREEBOARD TO 100 YR WSE
**DIMENSIONS ARE APPROXIMATED VALUES BASED ON SURVEY DATA.

Contact Arizona 811 Two Working Days Before You Dig
ARIZONA811 BLUE STAKE, INC.
Call 811 or Click Arizona811.com

NO.	REVISION	BY	DATE
3			
2			
1			

MARICOPA COUNTY

NORTHERN PARKWAY
103RD AVENUE TO 91ST AVENUE - PHASE 1
PROJECT NO. TT0372

	BY	DATE
DESIGNED	AO	04/2026
DRAWN	BR	04/2026
CHECKED	KLH	04/2026

Registered Professional Engineer (Civil) CERTIFICATE NO. 37868 KODI-LIM HOE Date Signed 4/29/2026 ARIZONA, U.S.A.

TYLin

GENERAL PLAN & ELEVATION

SHEET SB02

TRACS NO.

c:\bmstyli-pw\brandon.rudolph@tylin.com\d0573062\TT0372_SB_NewRiver_02gp.dgn
Brandon Rudolph OpenRoads_Imperial 3:41:35 PM 4/29/2026 MCDOT_TYLIN_HALF_PRINT.tbl TYLI_GN_bwpdf Half.pltcfg

F.H.W.A. REGION	STATE	PROJECT NO.	SHEET NO.	TOTAL SHEETS	RECORD DRAWING
9	AZ	TT0372	147	224	

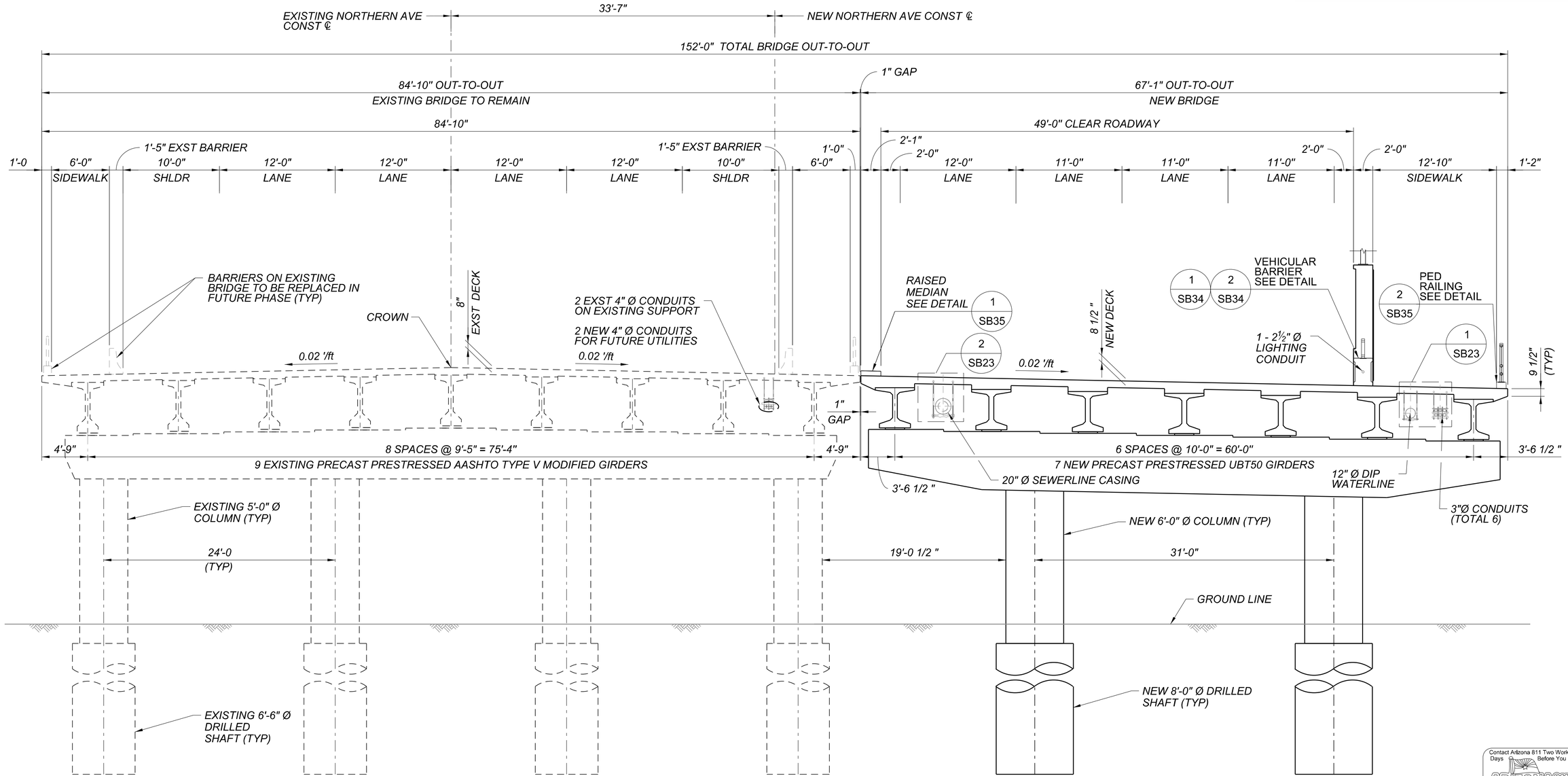

TYPICAL SECTION

SCALE: 3/16"=1'-0"

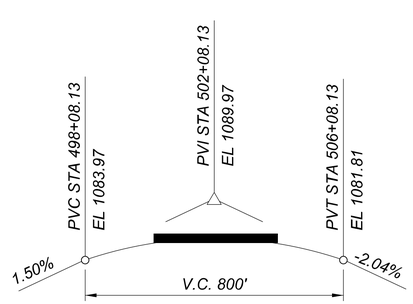

NEW NORTHERN AVE CONSTR CL PROFILE

NOT TO SCALE

HANGED PIPE NOTE:

STEEL CASING PIPE AND THE WATERLINE PIPE SHALL INCLUDE AT LEAST ONE EXPANSION JOINT WITH EBAA IRON 200 EX-TEND OR APPROVED EQUAL. THE EXPANSION JOINT SHALL ACCOMODATE MINIMUM 3" MOVEMENT. THE LOCATION OF THE EXPANSION JOINT SHALL BE NEAR BY THE ABUTMENT AND DETERMINED BY THE CONTRACTOR. THE SELECTED EXPANSION DETAIL AND LOCATION SHALL BE SUBMITTED TO REVIEW BEFORE COMMENCING.

Contact Arizona 811 Two Working Days Before You Dig
ARIZONA811 BLUE STAKE, INC.
Call 811 or Click Arizona811.com

NO.	REVISION	BY	DATE
3			
2			
1			

MARICOPA COUNTY

NORTHERN PARKWAY
103RD AVENUE TO 91ST AVENUE - PHASE 1
PROJECT NO. TT0372

	BY	DATE
DESIGNED	AO	04/2026
DRAWN	BR	04/2026
CHECKED	KLH	04/2026

Registered Professional Engineer (Civil) CERTIFICATE NO. 37060 KODI-LIM HOE Date Signed 5/4/2026 ARIZONA, U.S.A.

TYLin

TYPICAL SECTION

SHEET SB03

TRACS NO.

c:\bmstylii-pw\brandon.rudolph@tylin.com\d0573062\TT0372_SB_NewRiver_03xs.dgn
Brandon Rudolph OpenRoads_Imperial 11:40:33 AM 5/4/2026 MCDOT_TYLIN_HALF_PRINT.tbl TYLI_GN_bwpdf Half.pltcfg

GENERAL NOTES:

CONSTRUCTION SPECIFICATION - ARIZONA DEPARTMENT OF TRANSPORTATION, STANDARD SPECIFICATIONS FOR ROAD AND BRIDGE CONSTRUCTION, EDITION OF 2021.

DESIGN SPECIFICATION - AMERICAN ASSOCIATION OF STATE HIGHWAY AND TRANSPORTATION OFFICIALS (AASHTO) LRFD BRIDGE DESIGN SPECIFICATIONS FOR HIGHWAY BRIDGE, 9TH EDITION 2020.

DEAD LOAD - INCLUDES ALLOWANCE OF 25 POUNDS PER SQUARE FOOT (PSF) FOR FUTURE WEARING SURFACE (FWS) ON ROADWAY AND SIDEWALKS

LIVE LOAD
LOADING CLASS - HL-93.

SEISMIC -
SEISMIC ZONE 1
SITE CLASS D
As = 0.082g
Sds = 0.185g
Sd1 = 0.093g

INVENTORY AND OPERATING RATING ARE IN ACCORDANCE WITH THE AASHTO MANUAL FOR BRIDGE EVALUATION, 3RD EDITION 2018, WITH 2019 AND 20202 INTERIMS, AS MODIFIED BY THE ADOT BRIDGE LOAD RATING GUIDELINES, AND IN ACCORDANCE WITH THE LOAD AND RESISTANCE FACTOR RATING METHOD.

INVENTORY RATING RF = 1.25
OPERATING RATING RF = 2.15

ALL CONCRETE SHALL BE CLASS "S" UNLESS NOTED OTHERWISE.

REINFORCING STEEL SHALL CONFORM TO ASTM SPECIFICATION A615 EXCEPT REINFORCING TO BE WELDED SHALL CONFORM TO ASTM A706. ALL REINFORCING SHALL BE FURNISHED AS GRADE 60.

ALL BENDS AND HOOKS SHALL MEET THE REQUIREMENTS OF AASHTO ARTICLE 5.10.2 UNLESS NOTED OTHERWISE. ALL BEND DIMENSIONS FOR REINFORCING STEEL SHALL BE OUT-TO-OUT OF BARS. ALL PLACEMENT DIMENSIONS FOR REINFORCING STEEL SHALL BE TO CENTER OF BARS UNLESS NOTED OTHERWISE.

ALL REINFORCING STEEL SHALL HAVE 2 INCH CLEAR COVER UNLESS NOTED OTHERWISE.

MATERIAL STRENGTH:
DECK & PIER DIAPHRAGMS.....f'c = 4.5 KSI
BRIDGE BARRIER, CURB, RAISED MEDIAN
& APPROACH SLABS.....f'c = 4.0 KSI
ABUTMENTS, PIERS, INTERMEDIATE
DIAPHRAGM, ABUTMENT DIAPHRAGM
& DRILLED SHAFTS.....f'c = 3.5 KSI
OTHER CLASS "S" CONCRETE.....f'c = 3.0 KSI
GRADE 60 TRANSVERSE DECK REINF.....fs = 24 KSI
ALL OTHER REINFORCING.....fy = 60 KSI
PRESTRESSING STEEL.....fpu = 270 KSI
PRECAST PRESTRESSED BT GIRDER.....f'ci = 7.5 KSI
f'c = 9.5 KSI

BARRIERS AND PARAPETS SHALL BE CONSTRUCTED AFTER SPANS HAVE TAKEN DEAD LOAD DEFLECTION.

BARRIERS AND PARAPETS SHALL NOT BE SLIP FORMED.

CHAMFER ALL EXPOSED CORNERS ¾" PER CHAMFER DETAIL UNLESS NOTED OTHERWISE.

DIMENSIONS SHALL NOT BE SCALED FROM DRAWINGS.

CONTRACTOR SHALL VERIFY THE TOP OF DECK ELEVATIONS SHOWN ON SHEET SB31 PRIOR TO FABRICATION OF ANY MATERIALS. ANY DISCREPANCIES SHALL BE BROUGHT TO THE ATTENTION OF THE ENGINEER-OF-RECORD AND SHALL BE RESOLVED PRIOR TO PROCEEDING WITH THE WORK.

LIST OF ABBREVIATIONS:

ABT	=	ABUTMENT	JT	=	JOINT
BF	=	BACK FACE	LN	=	LANE
BIT	=	BITUMINOUS	MIN	=	MINIMUM
BRG	=	BEARING	NTS	=	NOT TO SCALE
CLR	=	CLEAR	P	=	PINNED
COL	=	COLUMN	PGL	=	PROFILE GRADE LINE
CONST	=	CONSTRUCTION	PKWY	=	PARKWAY
DIA	=	DIAMETER	R/W	=	RIGHT OF WAY
DWG	=	DRAWING	SHLDR	=	SHOULDER
EL	=	ELEVATION	SIP	=	STAY IN PLACE
EQ	=	EQUAL	SPA	=	SPACE
EXC	=	EXCAVATION	S/W	=	SIDEWALK
E	=	EXPANSION	SYMM	=	SYMMETRICAL
EXST	=	EXISTING	TYP	=	TYPICAL
EXT	=	EXTERIOR	VERT	=	VERTICAL
FF	=	FRONT FACE	UNO	=	UNLESS NOTED OTHERWISE
INT	=	INTERIOR			

STRUCTURE DETAIL DRAWINGS:

ADOT BRIDGE GROUP STRUCTURE DETAIL DRAWINGS
SD 2.01
SD 3.03
SD 5.01. SD 5.02

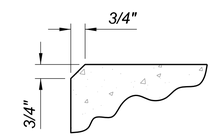

CHAMFER DETAIL
NOT TO SCALE

APPROXIMATE QUANTITIES

ITEM	STRUCTURAL EXCAVATION C.Y.	STRUCTURE BACKFILL C.Y.	REMOVAL STRUCTURAL CONCRETE C.Y.	CLASS S CONCRETE f' c = 3500 PSI C.Y.	CLASS S CONCRETE f' c = 4500 PSI C.Y.	REINFORCING STEEL LBS	PRECAST PRESTRESSED BT50 GIRDER L.F.	DRILLED SHAFT 6'-6" Φ L.F.	DRILLED SHAFT 8'-0" Φ L.F.
ABUTMENT 1	75	70		122	3	18,340		248	
PIER 1	10			138		30,345			188
PIER 2	10			139		30,345			188
PIER 3	10			138		30,345			188
ABUTMENT 2	125	65		122	3	18,005		248	
SUPERSTRUCTURE				121	966	295,135	2,703		
TOTAL	230	135		780	972	422,515	2,703	496	564
AS-BUILT									

VEHICULAR CONCRETE BARRIER.....424 L.F.
PEDESTRIAN CONCRETE CURB.....424 L.F.
VERTICAL RESTRAINERS (EXPANSION).....16 EA.
VERTICAL RESTRAINERS (FIXED).....36 EA.
DECK JOINT ASSEMBLY (FLANGELESS STRIP SEAL) (SD 3.03).....140 L.F.
APPROACH SLAB (SD 2.01).....2,052 S.F.
ELASTOMERIC BEARING PADS.....56 EA.
PLACE DOWELS.....136 EA.
FERRULE LOOP INSERT.....400 EA.
12" WATER PIPE HANGER.....1 L.S.
20" STEEL CASING HANGER.....1 L.S.
CONDUIT HANGER.....1 L.S.

NOTES:

1. THE QUANTITIES FOR RAILINGS AND PEDESTRIAN FENCES ARE COVERED IN ARCHITECTURAL ITEMS. SEE SHEETS BR301-BR308 FOR DETAILS.
2. THE QUANTITIES FOR CONDUITS AND JUNCTION BOXES ARE COVERED IN STREET LIGHTING ITEMS, SEE SHEETS LN01-IC06 FOR DETAILS.
3. THE QUANTITIES FOR WATERLINE, SEWERLINE, AND SEWERLINE CASING ARE COVERED IN UTILITIES ITEMS. SEE SHEETS U11-U14 FOR DETAILS
4. REINFORCING AND DOWEL REINFORCING FOR CONCRETE BARRIERS AND CONCRETE CURBS ARE INCLUDED IN BARRIER AND CURB PAY ITEMS.
5. VEHICULAR BARRIER CONCRETE COLUMN (12'-0" X 8'-0") IS INCLUDED IN BARRIER ITEM
6. FERRULE LOOP INSERT & PLACE DOWELS WILL BE INCIDENTAL TO THE 4,500 PSI CONCRETE PAY ITEM.
7. CONTRACTOR SHALL REMOVE EXCAVATED MATERIAL FROM THE NEW RIVER CHANNEL AND HAUL/DISPOSE. NO ADDITIONAL MEASUREMENT OR PAYMENT WILL BE MADE TO HAUL AND DISPOSE WASTE MATERIAL.

Contact Arizona 811 Two Working Days Before You Dig
ARIZONA811 BLUE STAKE, INC.
Call 811 or Click Arizona811.com

NO.	REVISION	BY	DATE
3			
2			
1			

MARICOPA COUNTY

NORTHERN PARKWAY
103RD AVENUE TO 91ST AVENUE - PHASE 1
PROJECT NO. TT0372

	BY	DATE
DESIGNED	AO	04/2026
DRAWN	BR	04/2026
CHECKED	KLH	04/2026

Registered Professional Engineer (Civil) CERTIFICATE NO. 37060 KOOI-LIM HOE Date Signed 5/4/2026 ARIZONA, U.S.A.

TYLin

GENERAL NOTES & QUANTITIES

SHEET SB04

TRACS NO.

Brandon Rudolph OpenRoads_Imperial 11:40:55 AM 5/4/2026 MCDOT_TYLIN_HALF_PRINT.tbl TYLI_GN_bwpdf Half.pltcfg
c:\bmsi\tyli-pw\brandon.rudolph@tylin.com\d0573062\TT0372_SB_NewRiver_04nq.dgn

F.H.W.A. REGION	STATE	PROJECT NO.	SHEET NO.	TOTAL SHEETS	RECORD DRAWING
9	AZ	TT0372	149	224	

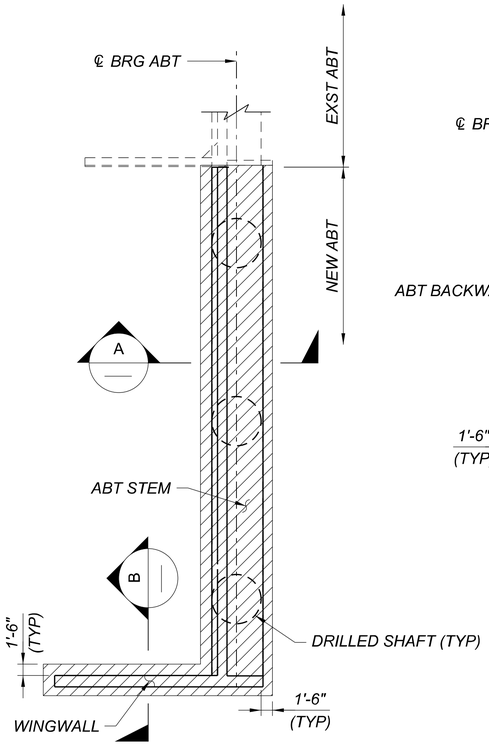

ABUTMENT PLAN
NOT TO SCALE

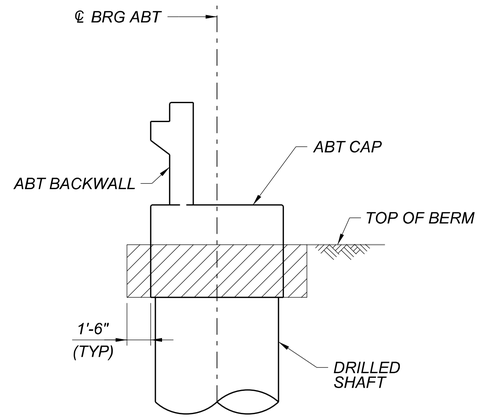

SECTION A
NOT TO SCALE

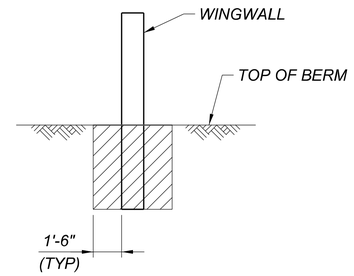

SECTION B
NOT TO SCALE

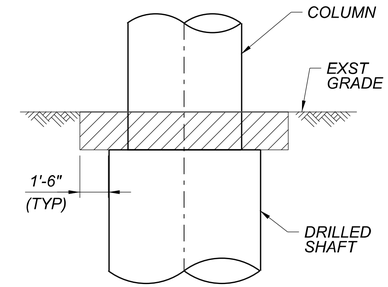

PIER SECTION
NOT TO SCALE

STRUCTURAL EXCAVATION PAYMENT LIMITS

NOTES:

1. TOP OF BERM IS THE INTERCEPT OF THE EMBANKMENT SLOPE WITH THE FRONT FACE OF ABUTMENT OR WINGWALL.
2. CONSTRUCT EMBANKMENT TO TOP OF BERM PRIOR TO EXCAVATION AND CONSTRUCTION OF DRILLED SHAFTS.

LEGEND

DENOTES LIMITS OF STRUCTURAL EXCAVATION

DENOTES LIMITS OF STRUCTURE BACKFILL (100% COMPACTION)

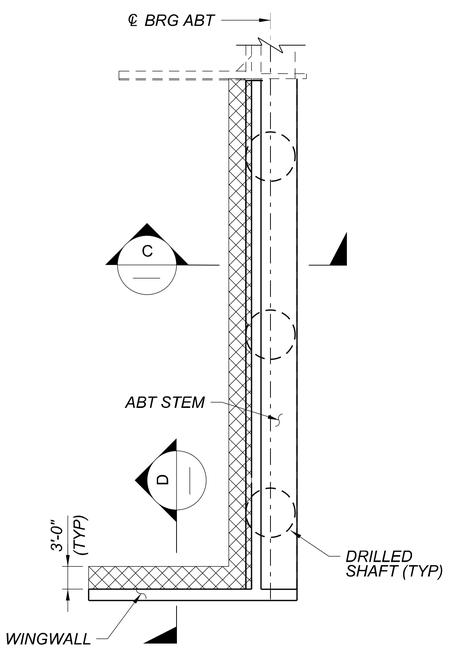

ABUTMENT PLAN
NOT TO SCALE

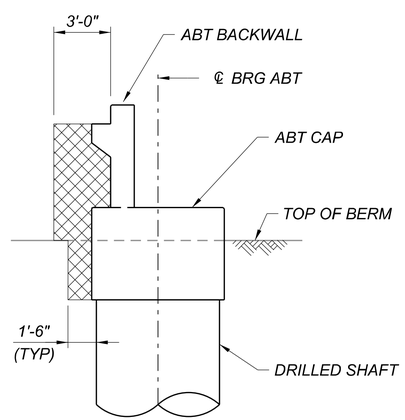

SECTION C
NOT TO SCALE

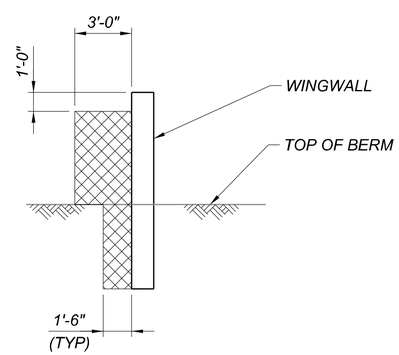

SECTION D
NOT TO SCALE

STRUCTURE BACKFILL PAYMENT LIMITS

Contact Arizona 811 Two Working Days Before You Dig
ARIZONA811 BLUE STAKE, INC.
Call 811 or Click Arizona811.com

NO.	REVISION	BY	DATE
3			
2			
1			

MARICOPA COUNTY

NORTHERN PARKWAY
103RD AVENUE TO 91ST AVENUE - PHASE 1
PROJECT NO. TT0372

	BY	DATE
DESIGNED	AO	04/2026
DRAWN	BR	04/2026
CHECKED	KLH	04/2026

Registered Professional Engineer (Civil) CERTIFICATE NO. 37968 KOOI-LIM HOE Date Signed 4/29/2026 ARIZONA, U.S.A.

TYLin

STR EXC & BACKFILL LIMITS

SHEET SB05

TRACS NO.

c:\bms\tyli-pw\brandon.rudolph@tylin.com\d0573062\TT0372_SB_NewRiver_05eb.dgn Brandon Rudolph OpenRoads_Imperial 3:42:22 PM 4/29/2026 MCDOT_TYLIN_HALF_PRINT.tbl TYLI_GN_bwpdf Half.pltcfg

F.H.W.A. REGION	STATE	PROJECT NO.	SHEET NO.	TOTAL SHEETS	RECORD DRAWING
9	AZ	TT0372	150	224	

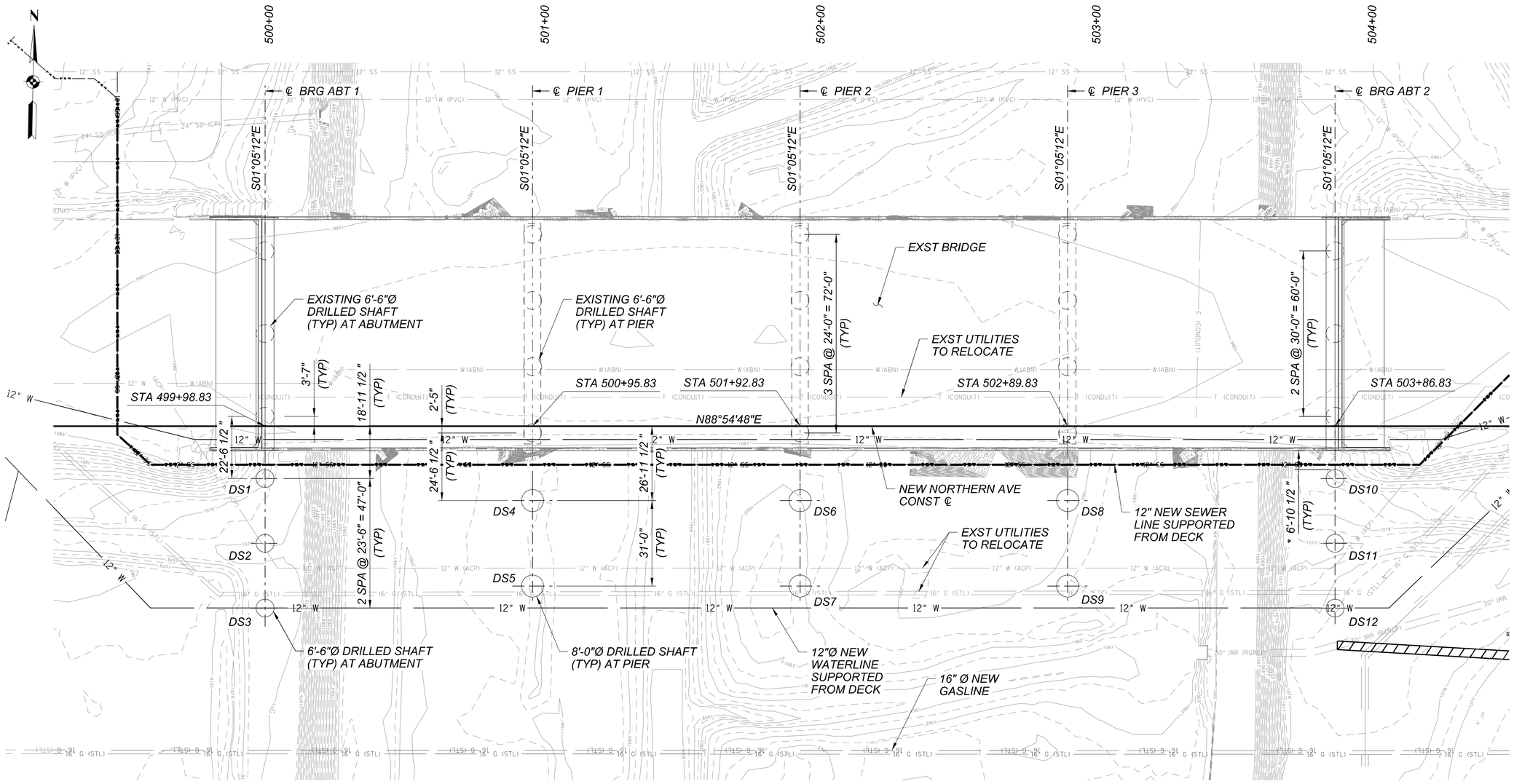

FOUNDATION LAYOUT

SCALE: 1"=20'-0"

* CLEAR DISTANCE TO EXST ABT

FOUNDATION LAYOUT			
LOCATION	SHAFT	EASTING	NORTHING
ABT 1	DS1	590655.93	928400.13
	DS2	590656.37	928376.63
	DS3	590656.82	928353.14
PIER 1	DS4	590753.06	928393.97
	DS5	590753.65	928362.97
PIER 2	DS6	590850.05	928395.81
	DS7	590850.63	928364.81
PIER 3	DS8	590947.03	928397.65
	DS9	590947.62	928366.65
ABT 2	DS10	591043.86	928407.49
	DS11	591044.30	928383.99
	DS12	591044.75	928360.49

Contact Arizona 811 Two Working Days Before You Dig
Call 811 or Click Arizona811.com

NO.	REVISION	BY	DATE
3			
2			
1			

MARICOPA COUNTY

NORTHERN PARKWAY
103RD AVENUE TO 91ST AVENUE - PHASE 1
PROJECT NO. TT0372

	BY	DATE
DESIGNED	AO	04/2026
DRAWN	BR	04/2026
CHECKED	KLH	04/2026

Registered Professional Engineer (Civil) CERTIFICATE NO. 37060 KOOI-LIM HOE Date Signed 4/29/2026 ARIZONA, U.S.A.

TYLin

FOUNDATION LAYOUT

SHEET SB06

TRACS NO.

c:\bms\tyli-pw\brandon.rudolph@tylin.com\d0573062\TT0372_SB_NewRiver_06lt.dgn
Brandon Rudolph OpenRoads_Imperial 3:42:46 PM 4/29/2026 MCDOT_TYLIN_HALF_PRINT.tbl TYLI_GN_bwpdf Half.pltcfg

F.H.W.A. REGION	STATE	PROJECT NO.	SHEET NO.	TOTAL SHEETS	RECORD DRAWING
9	AZ	TT0372	151	224	

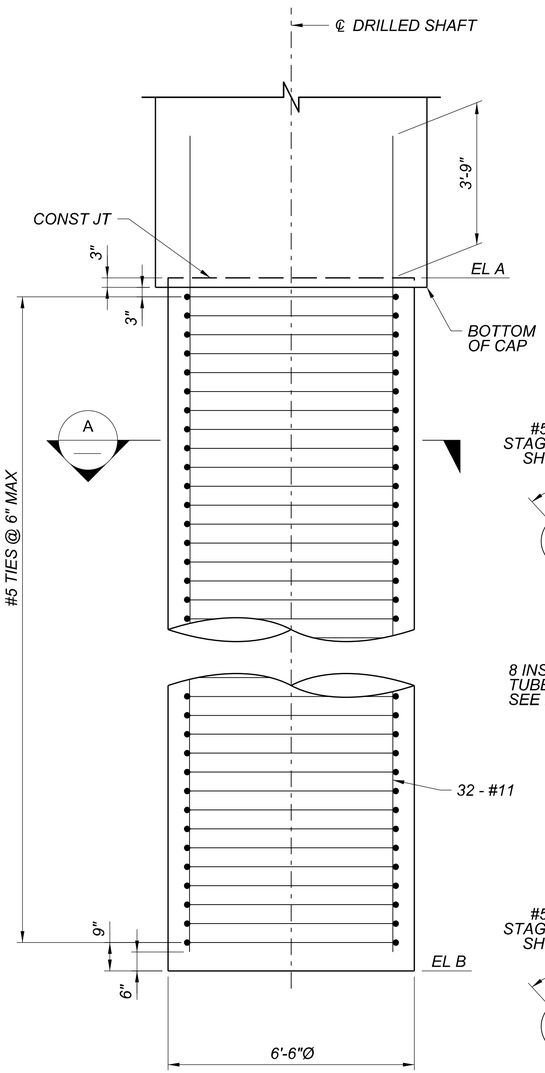

TYPICAL DRILLED SHAFT AT ABT

SCALE: 1/2"=1'-0"

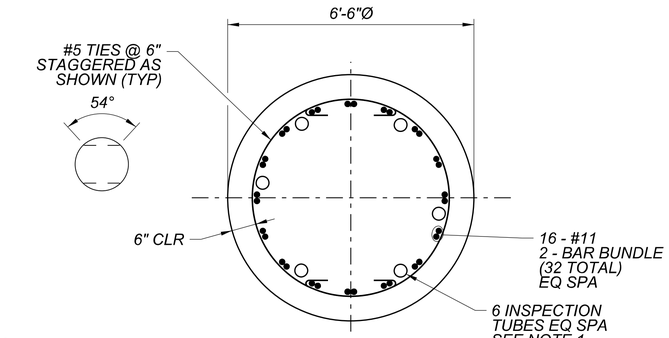

SECTION A

SCALE: 1/2"=1'-0"

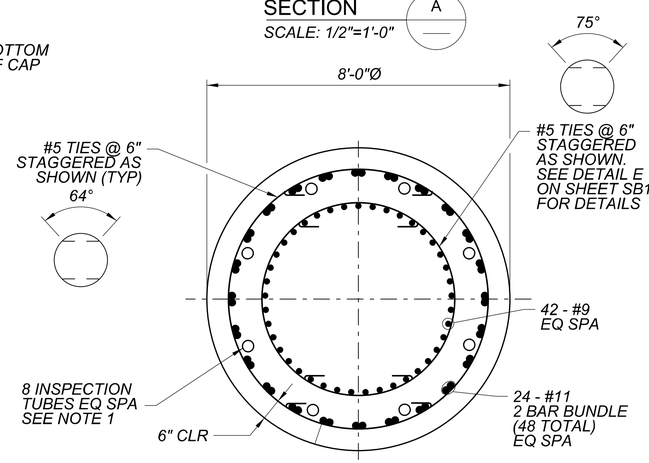

SECTION B

SCALE: 1/2"=1'-0"

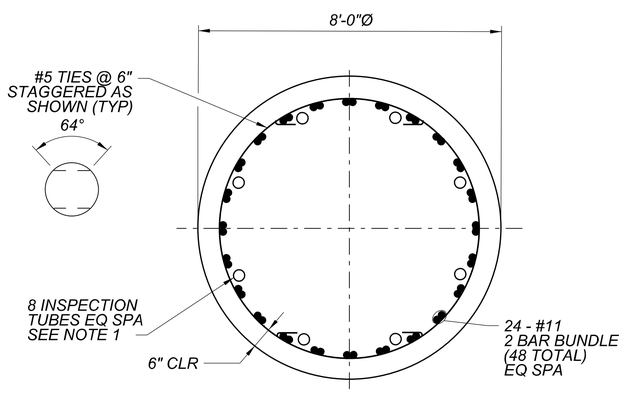

SECTION C

SCALE: 1/2"=1'-0"

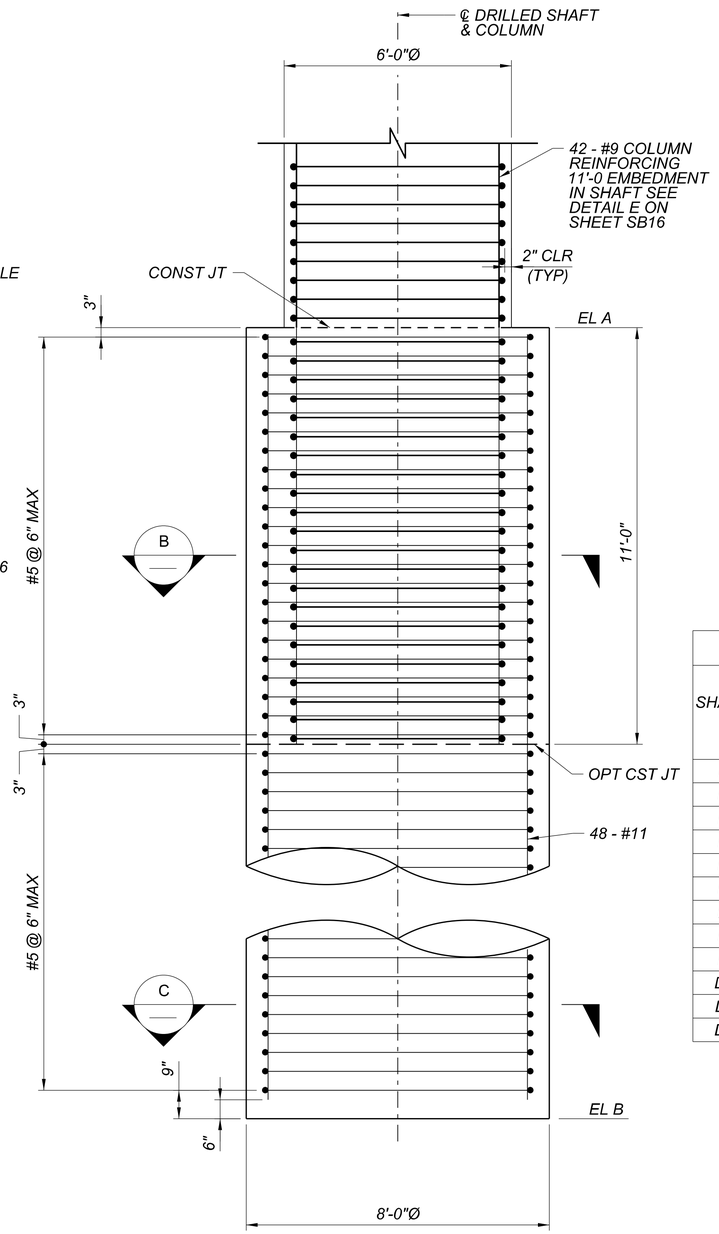

TYPICAL DRILLED SHAFT AT PIER

SCALE: 1/2"=1'-0"

NOTES:

1. INSPECTION TUBE SIZE, TYPE AND DETAILS SHALL BE PER ADOT STANDARD SPECIFICATIONS AND SPECIAL PROVISIONS. INSPECTION TUBES SHALL NOT BE ATTACHED TO THE LONGITUDINAL REINFORCEMENT AND SHALL BE PLACED BETWEEN LONGITUDINAL REINFORCEMENT ON THE INSIDE OF THE TIES. INSPECTION TUBES SHALL BE INSTALLED IN ALL SHAFTS.
2. IN THE EVENT OF A WEAK LAYER (SILT, CLAY, LOOSE SAND, ETC.) AT THE RECOMMENDED ELEVATION OF THE SHAFT BOTTOM, THE SHAFT SHALL BE EXTENDED TO BEAR ON FIRM SOIL AS DETERMINED BY THE ENGINEER.
3. CONCRETE SHALL BE PLACED IMMEDIATELY AFTER EXCAVATION HAS BEEN COMPLETED AND THE REINFORCING CAGE PLACED IN ITS POSITION.
4. ANY CONSTRUCTION JOINT NOT SHOWN ON THE PROJECT PLANS SHALL REQUIRE THE APPROVAL OF THE ENGINEER PRIOR TO CONSTRUCTION.
5. DRILLED SHAFT EXCAVATION IS NOT PERMITTED WITHIN 48 HOURS OF COMPLETION OF CONCRETE PLACEMENT OF AN ADJACENT DRILLED SHAFT. AN ADJACENT DRILLED SHAFT IS ANY DRILLED SHAFT WITHIN 4 DIAMETERS MEASURED CENTER TO CENTER.
6. COLUMN REINFORCING SHALL BE PLACED AND ORIENTED AS SHOWN TO FACILITATE ABUTMENT & PIER CAP REINFORCEMENT PLACEMENT.
7. EACH TIE HOOK SHALL ENGAGE A VERTICAL REINFORCING BAR.

DRILLED SHAFT TABLE

SHAFT NO	EL A (FT)	EL B (FT)	FACTORED SERVICE LOAD (KIPS)	FACTORED STRENGTH LOAD (KIPS)	TOTAL SETTLEMENT (INCH)
DS 1	1074.71	991.96	755	1030	0.07
DS 2	1074.71	991.96	755	1030	0.07
DS 3	1074.71	991.96	755	1030	0.07
DS 4	1058.00	964.00	2055	2765	0.31
DS 5	1058.00	964.00	2055	2765	0.31
DS 6	1058.00	964.00	2055	2765	0.31
DS 7	1058.00	964.00	2055	2765	0.31
DS 8	1058.00	964.00	2055	2765	0.31
DS 9	1058.00	964.00	2055	2765	0.31
DS 10	1073.93	991.18	755	1030	0.07
DS 11	1073.93	991.18	755	1030	0.07
DS 12	1073.93	991.18	755	1030	0.07

Contact Arizona 811 Two Working Days Before You Dig
ARIZONA811 BLUE STAKE, INC.
Call 811 or Click Arizona811.com

NO.	REVISION	BY	DATE
3			
2			
1			

MARICOPA COUNTY

NORTHERN PARKWAY
103RD AVENUE TO 91ST AVENUE - PHASE 1
PROJECT NO. TT0372

	BY	DATE
DESIGNED	AO	04/2026
DRAWN	BR	04/2026
CHECKED	KLH	04/2026

Registered Professional Engineer (Civil) CERTIFICATE NO. 37868 KOOI-LIM HOE Date Signed 4/29/2026 ARIZONA, U.S.A.

TYLin

DRILLED SHAFT DETAILS

SHEET SB07

TRACS NO.

c:\bms\tylyl-pw\brandon.rudolph@tylin.com\d0573062\TT0372_SB_NewRiver_07ds.dgn
Brandon Rudolph OpenRoads_Imperial 3:43:00 PM 4/29/2026 MCDOT_TYLIN_HALF_PRINT.tbl TYLI_GN_bwpdf Half.pltcfg

F.H.W.A. REGION	STATE	PROJECT NO.	SHEET NO.	TOTAL SHEETS	RECORD DRAWING
9	AZ	TT0372	152	224	

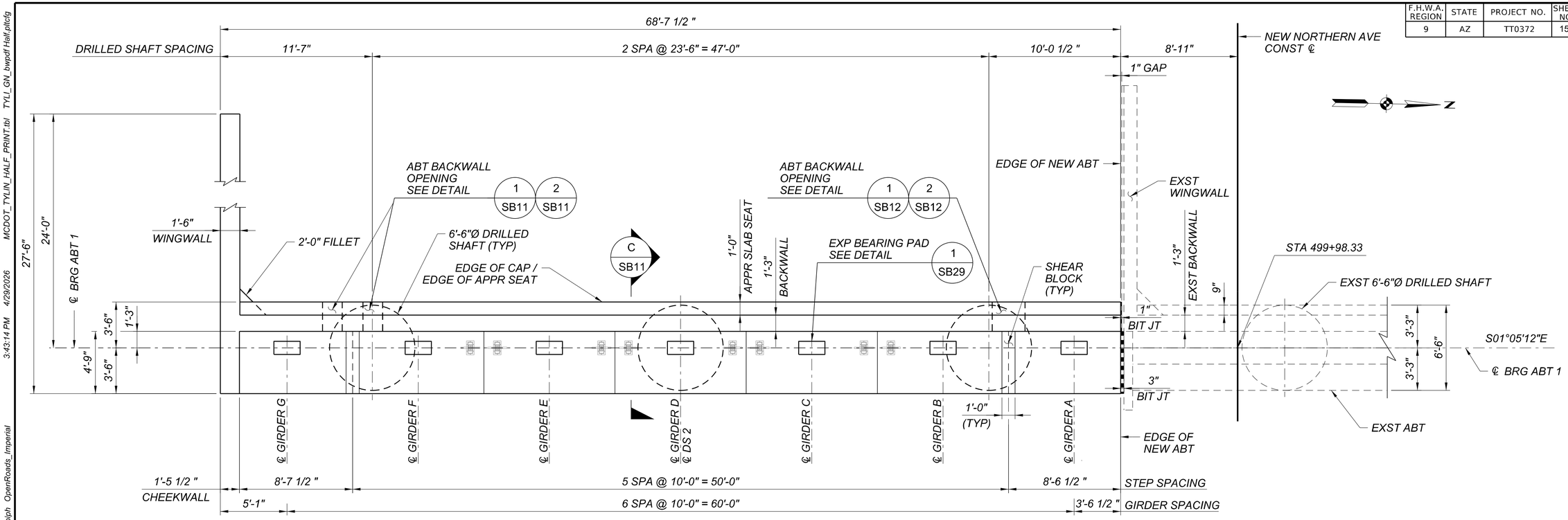

ABUTMENT 1 PLAN

SCALE: 1/4"=1'-0"

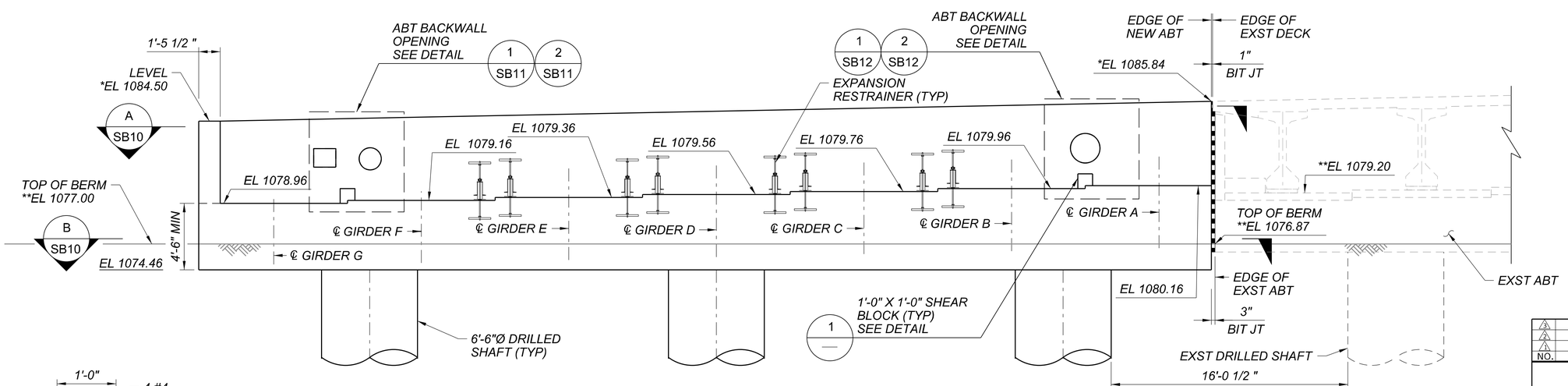

ABUTMENT 1 ELEVATION

(LOOKING BACK STATION)
SCALE: 1/4"=1'-0"

*ELEVATION AT FRONT FACE OF BACKWALL
**ELEVATIONS BASED ON SURVEY

NOTE:

SUPERSTRUCTURE NOT SHOWN FOR CLARITY.

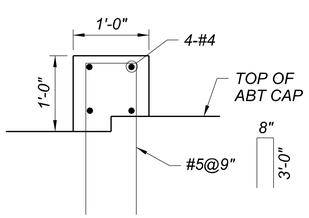

SHEAR BLOCK DETAIL

1 — 1 SB09 1 SB26

Contact Arizona 811 Two Working Days Before You Dig
ARIZONA811 BLUE STAKE, INC.
Call 811 or Click Arizona811.com

NO.	REVISION	BY	DATE
3			
2			
1			

MARICOPA COUNTY

NORTHERN PARKWAY
103RD AVENUE TO 91ST AVENUE - PHASE 1
PROJECT NO. TT0372

	BY	DATE
DESIGNED	AO	04/2026
DRAWN	BR	04/2026
CHECKED	KLH	04/2026

Registered Professional Engineer (Civil) CERTIFICATE NO. 37968 KOOI-LIM HOE Date Signed 4/29/2026 ARIZONA, U.S.A.

TYLin

ABUTMENT 1 PLAN AND ELEVATION

SHEET SB08

TRACS NO.

Brandon Rudolph OpenRoads_Imperial 3:43:14 PM 4/29/2026 MCDOT_TYLIN_HALF_PRINT.tbl TYLI_GN_bwpdf Half.pltcfg
c:\bmstyli-pw\brandon.rudolph@tylin.com\d0573062\TT0372_SB_NewRiver_08ab1.dgn

F.H.W.A. REGION	STATE	PROJECT NO.	SHEET NO.	TOTAL SHEETS	RECORD DRAWING
9	AZ	TT0372	153	224	

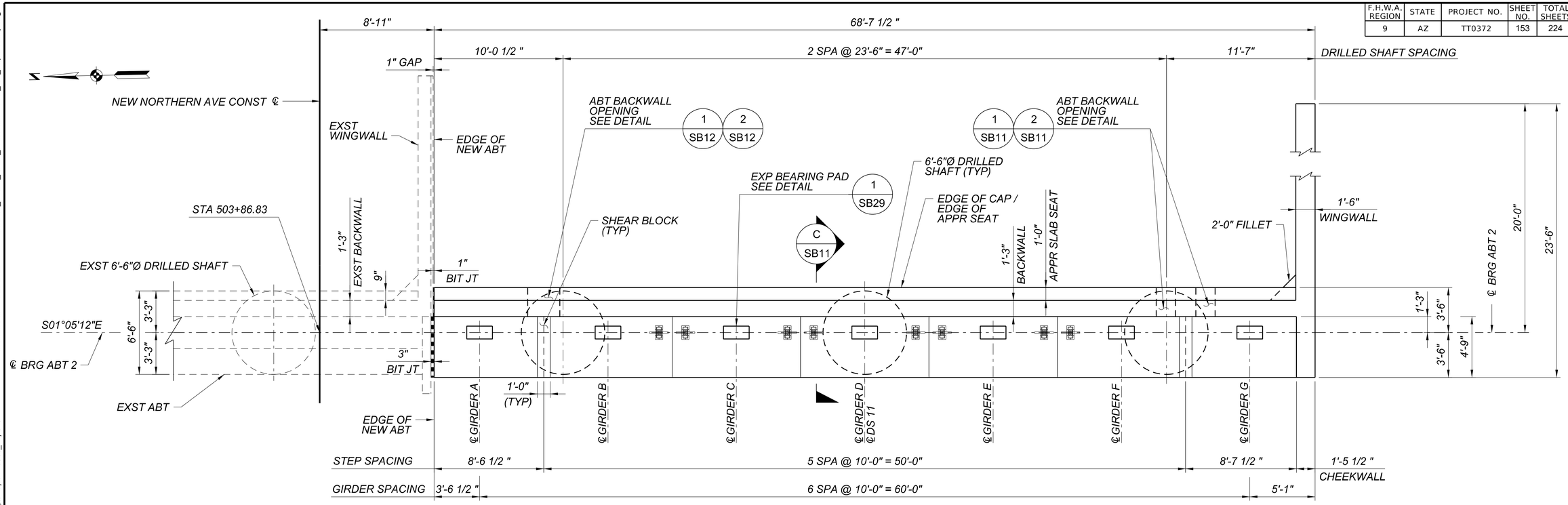

ABUTMENT 2 PLAN

SCALE: 1/4"=1'-0"

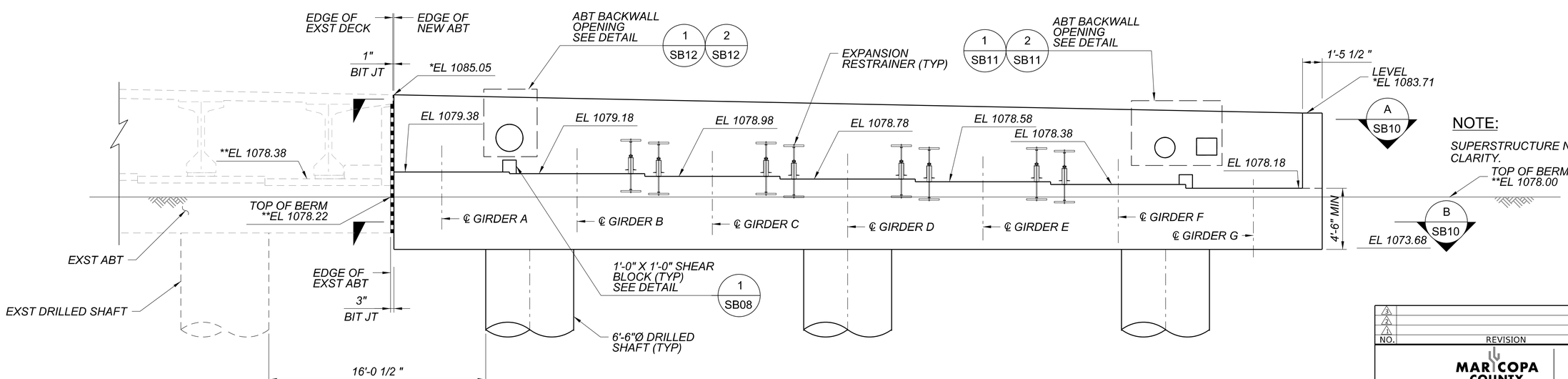

ABUTMENT 2 ELEVATION

(LOOKING AHEAD STATION)
SCALE: 1/4"=1'-0"

NOTE:

SUPERSTRUCTURE NOT SHOWN FOR CLARITY.

*ELEVATION AT FRONT FACE OF BACKWALL
**ELEVATION BASED ON SURVEY

Contact Arizona 811 Two Working Days Before You Dig
ARIZONA811 BLUE STAKE, INC.
Call 811 or Click Arizona811.com

NO.	REVISION	BY	DATE
3			
2			
1			

MARICOPA COUNTY

NORTHERN PARKWAY
103RD AVENUE TO 91ST AVENUE - PHASE 1
PROJECT NO. TT0372

	BY	DATE
DESIGNED	AO	04/2026
DRAWN	BR	04/2026
CHECKED	KLH	04/2026

Registered Professional Engineer (Civil) CERTIFICATE NO. 37968 KOOI-LIM HOE Date Signed 4/29/2026 ARIZONA, U.S.A.

TYLin

ABUTMENT 2 PLAN AND ELEVATION

SHEET SB09

TRACS NO.

c:\bms\tylin-pw\brandon.rudolph@tylin.com\d0573062\TT0372_SB_NewRiver_09ab2.dgn
Brandon Rudolph OpenRoads_Imperial 3:43:28 PM 4/29/2026 MCDOT_TYLIN_HALF_PRINT.tbl TYLI_GN_bwpdf Half.pltcfg

F.H.W.A. REGION	STATE	PROJECT NO.	SHEET NO.	TOTAL SHEETS	RECORD DRAWING
9	AZ	TT0372	154	224	

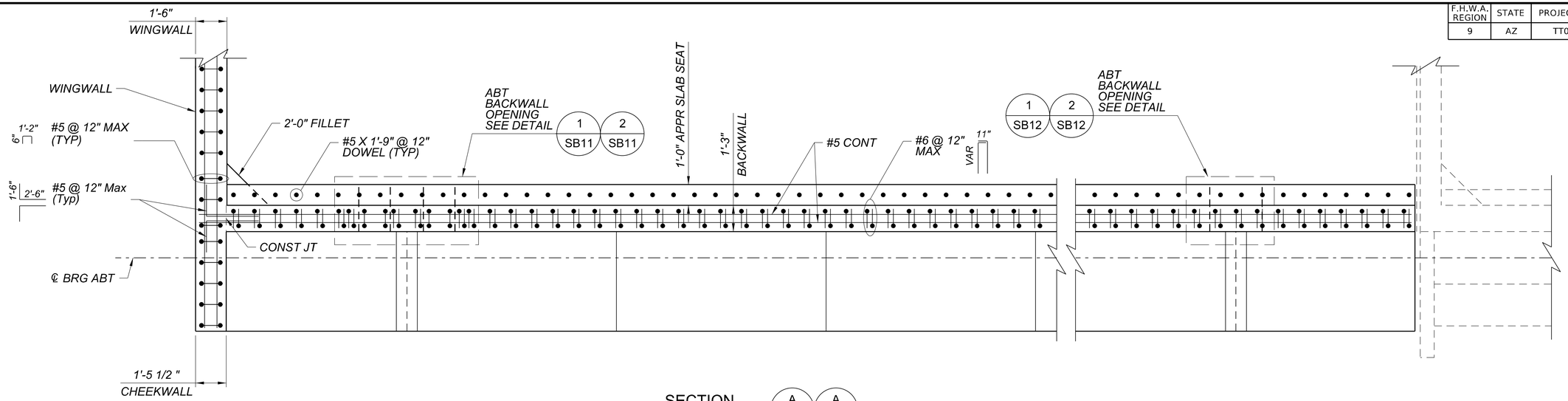

SECTION A A
SCALE: 3/8"=1'-0" SB08 SB09
(OPP)

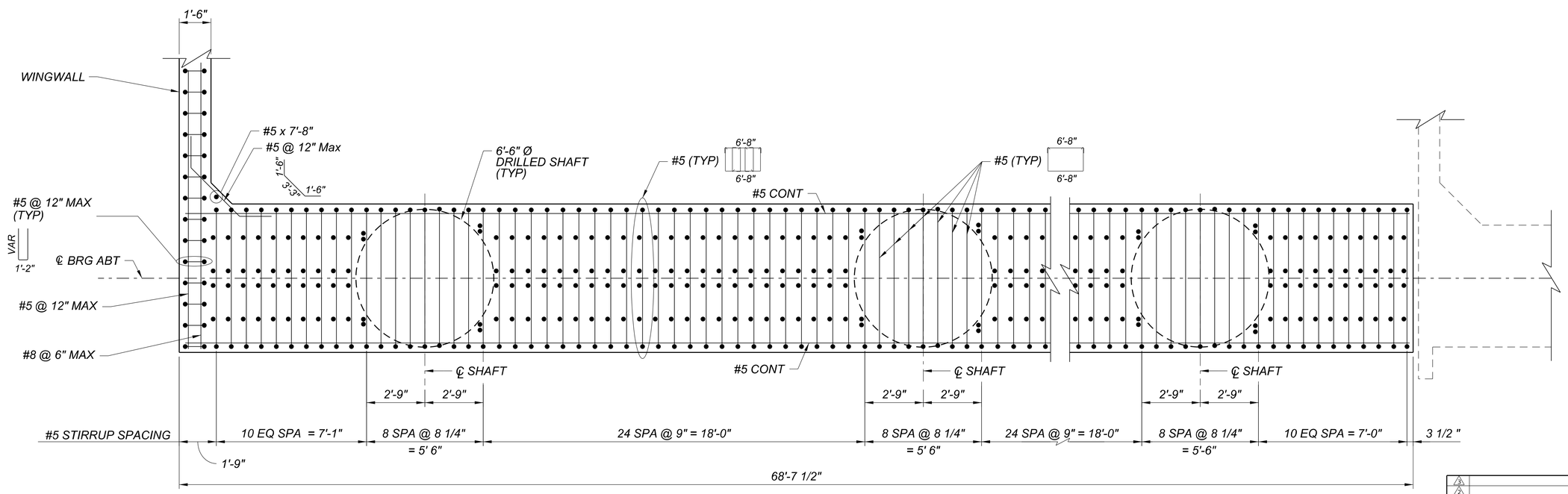

SECTION B B
SCALE: 3/8"=1'-0" SB08 SB09
(OPP)

Contact Arizona 811 Two Working Days Before You Dig
Call 811 or Click Arizona811.com

NO.	REVISION	BY	DATE
3			
2			
1			

MARICOPA COUNTY

NORTHERN PARKWAY
103RD AVENUE TO 91ST AVENUE - PHASE 1
PROJECT NO. TT0372

	BY	DATE
DESIGNED	AO	04/2026
DRAWN	BR	04/2026
CHECKED	KLH	04/2026

Registered Professional Engineer (Civil) CERTIFICATE NO. 37868 KOOI-LIM HOE Date Signed 4/29/2026 ARIZONA, U.S.A.

TYLin

ABUTMENT DETAILS 1

SHEET SB10

TRACS NO.

c:\bms\tyli-pw\brandon.rudolph@tylin.com\d0573062\TT0372_SB_NewRiver_10ad1.dgn Brandon Rudolph OpenRoads_Imperial 3:43:42 PM 4/29/2026 MCDOT_TYLIN_HALF_PRINT.tbl TYLI_GN_bwpdf Half.pltcfg

F.H.W.A. REGION	STATE	PROJECT NO.	SHEET NO.	TOTAL SHEETS	RECORD DRAWING
9	AZ	TT0372	155	224	

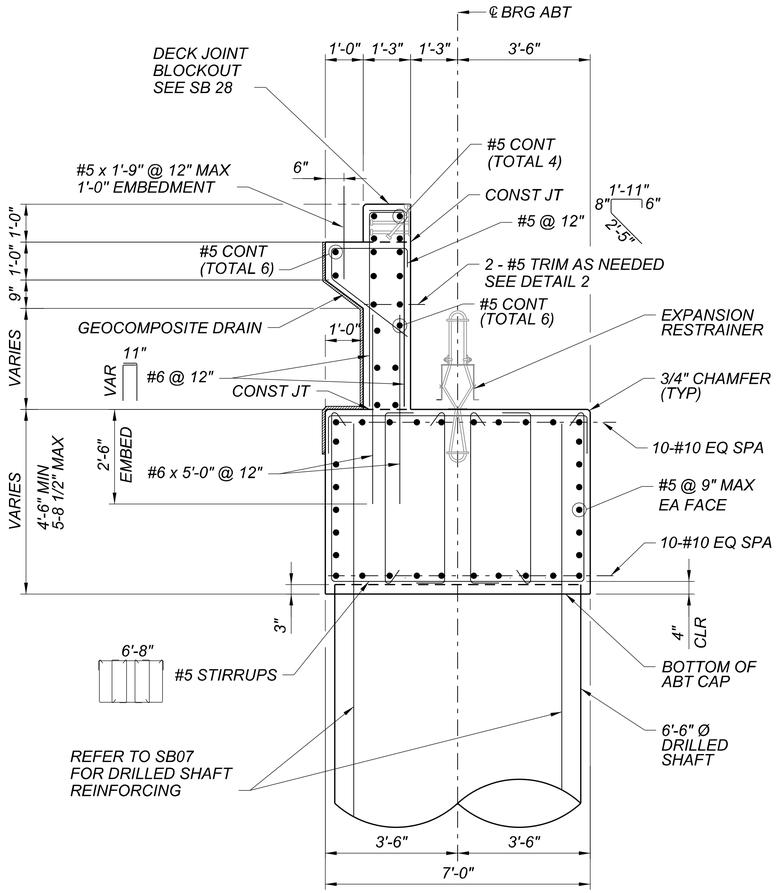

SECTION C / C — SB08 / SB09
SCALE: 1/2"=1'-0"

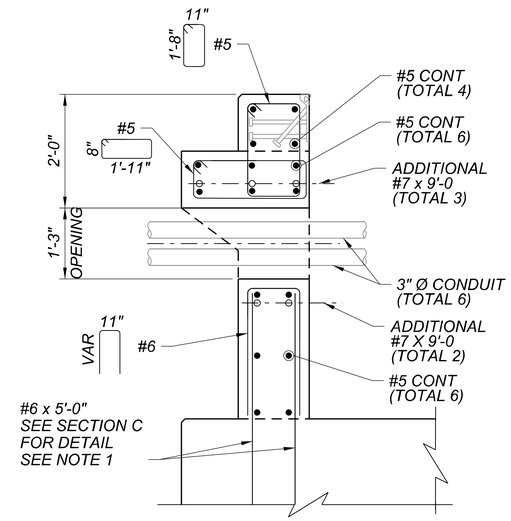

SECTION A
SCALE: 3/4"=1'-0"

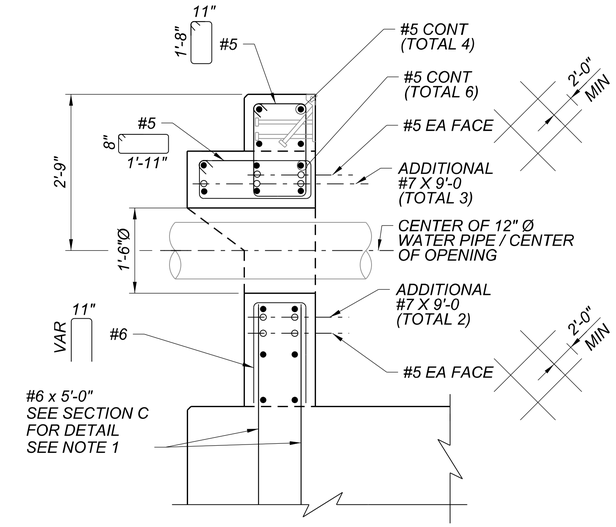

SECTION B
SCALE: 3/4"=1'-0"

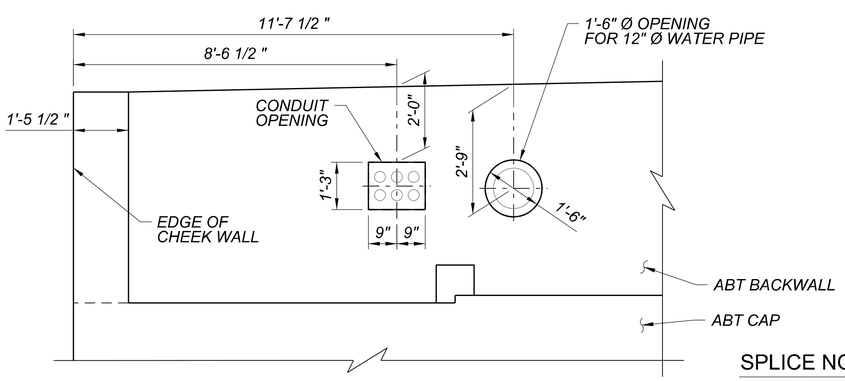

BACKWALL OPENING - ELEVATION — 1 / SB08, 1 / SB09, 1 / SB10
(ABT 1 SHOWN, ABT 2 SIMILAR)
LOOKING BACK STATION
SCALE: 1/2"=1'-0"

SPLICE NOTE:

1. TOP LONGITUDINAL #10 SHALL BE SPLICED AT MIDSPAN BETWEEN DRILLED SHAFT WITH A MIN LAP = 5'-6".
2. BOT LONGITUDINAL #10 SHALL BE SPLICED OVER DRILLED SHAFT WITH A MIN LAP = 4'-3".
3. LONGITUDINAL #5 SHALL HAVE A MIN. LAP = 2-2".

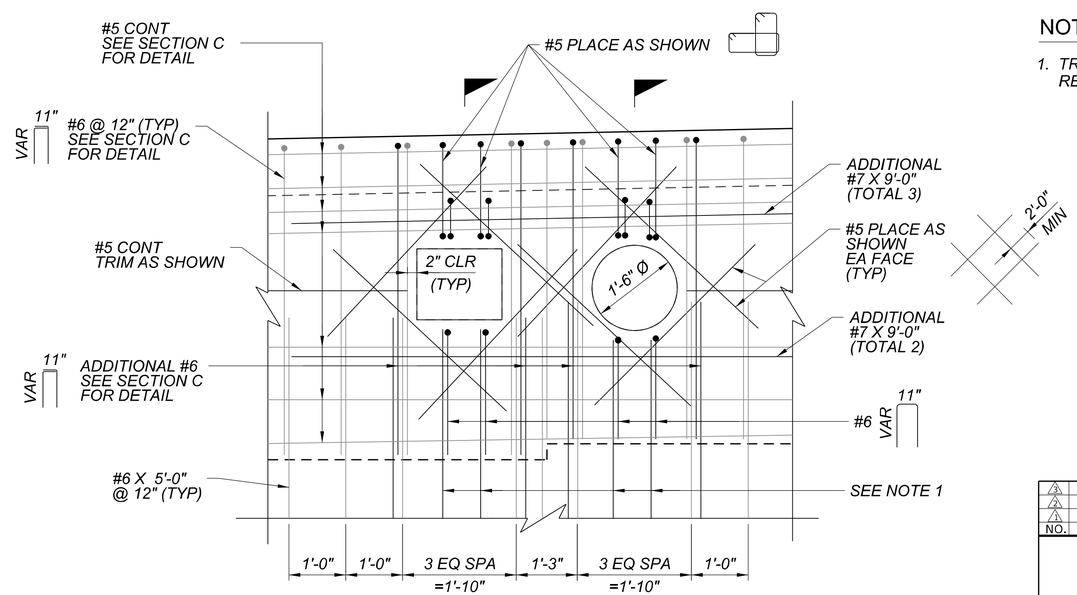

A B

NOTE:

TYPICAL BACKWALL REINFORCING SHOWN IN GREY SCALE FOR CLARITY. SEE SECTION C FOR DETAILS

BACKWALL OPENING REINFORCING DETAIL — 2 / SB08, 2 / SB09, 2 / SB10
SCALE: 3/4"=1'-0"

NOTES:

1. TRIM REINFORCING AS NEEDED TO REMAIN 2" CLR TO THE OPENING.

Contact Arizona 811 Two Working Days Before You Dig
ARIZONA811 BLUE STAKE, INC.
Call 811 or Click Arizona811.com

NO.	REVISION	BY	DATE
3			
2			
1			

MARICOPA COUNTY

NORTHERN PARKWAY
103RD AVENUE TO 91ST AVENUE - PHASE 1
PROJECT NO. TT0372

	BY	DATE
DESIGNED	AO	04/2026
DRAWN	BR	04/2026
CHECKED	KLH	04/2026

Registered Professional Engineer (Civil) CERTIFICATE NO. 37868 KOOI-LIM HOE Date Signed 4/29/2026 ARIZONA, U.S.A.

TYLin

ABUTMENT DETAILS 2

SHEET SB11

TRACS NO.

c:\bmstyli-pw\brandon.rudolph@tylin.com\d0573062\TT0372_SB_NewRiver_11ad2.dgn
Brandon Rudolph OpenRoads_Imperial 3:43:55 PM 4/29/2026 MCDOT_TYLIN_HALF_PRINT.tbl TYLI_GN_bwpdf Half.pltcfg

F.H.W.A. REGION	STATE	PROJECT NO.	SHEET NO.	TOTAL SHEETS	RECORD DRAWING
9	AZ	TT0372	156	224	

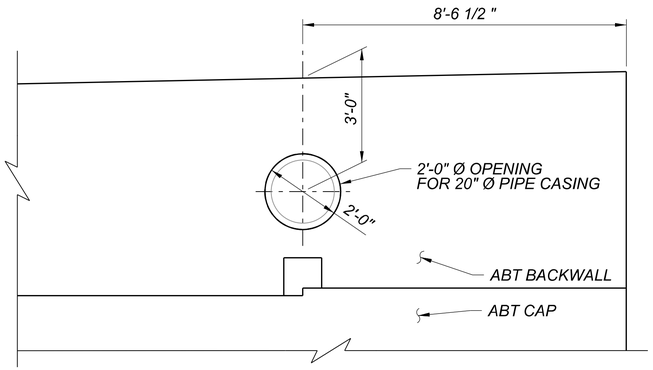

BACKWALL OPENING - ELEVATION (1 / SB08) (1 / SB09) (1 / SB10)

(ABT 1 SHOWN, ABT 2 SIMILAR)
SCALE: 1/2"=1'-0"

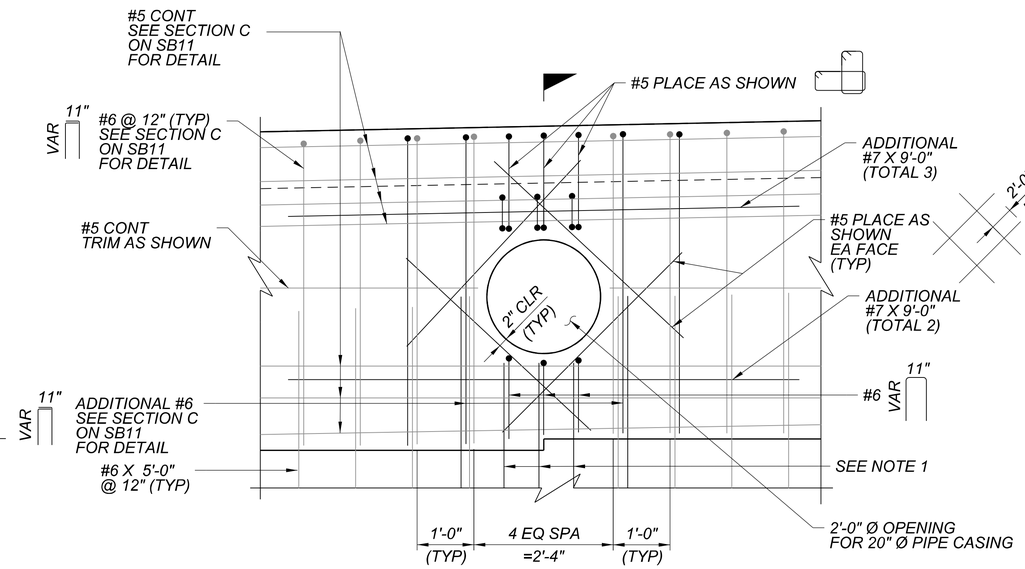

A

BACKWALL OPENING
REINFORCING DETAIL (2 / SB08) (2 / SB09) (2 / SB10)

SCALE: 3/4"=1'-0"

NOTE:

TYPICAL BACKWALL REINFORCING SHOWN IN GREY SCALE FOR CLARITY. SEE SECTION C ON SB11 FOR DETAILS

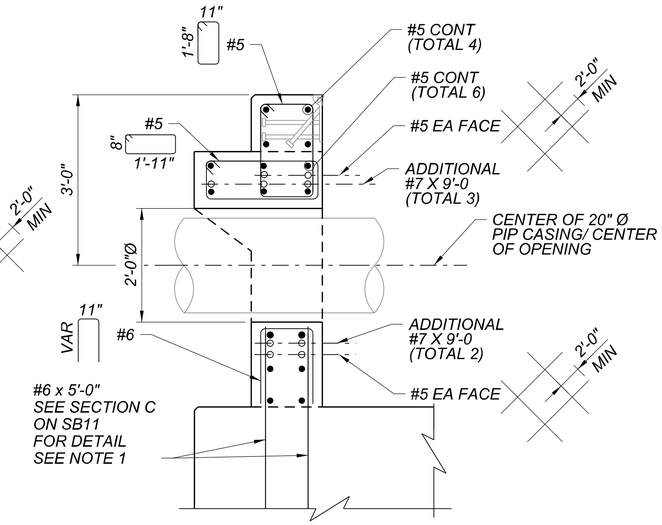

SECTION (A)

SCALE: 3/4"=1'-0"

NOTES:

1. TRIM REINFORCING AS NEEDED TO REMAIN 2" CLR TO THE OPENING.

Contact Arizona 811 Two Working Days Before You Dig
Call 811 or Click Arizona811.com

NO.	REVISION	BY	DATE
3			
2			
1			

MARICOPA COUNTY

NORTHERN PARKWAY
103RD AVENUE TO 91ST AVENUE - PHASE 1
PROJECT NO. TT0372

	BY	DATE
DESIGNED	AO	04/2026
DRAWN	BR	04/2026
CHECKED	KLH	04/2026

Registered Professional Engineer (Civil) CERTIFICATE NO. 37868 KOOI-LIM HOE Date Signed 4/29/2026 ARIZONA, U.S.A.

TYLin

ABUTMENT DETAILS 3

SHEET SB12

TRACS NO.

c:\bmstyli-pw\brandon.rudolph@tylin.com\d0573062\TT0372_SB_NewRiver_12ad3.dgn Brandon Rudolph OpenRoads_Imperial 3:44:09 PM 4/29/2026 MCDOT_TYLIN_HALF_PRINT.tbl TYLI_GN_bwpdf Half.pltcfg

F.H.W.A. REGION	STATE	PROJECT NO.	SHEET NO.	TOTAL SHEETS	RECORD DRAWING
9	AZ	TT0372	157	224	

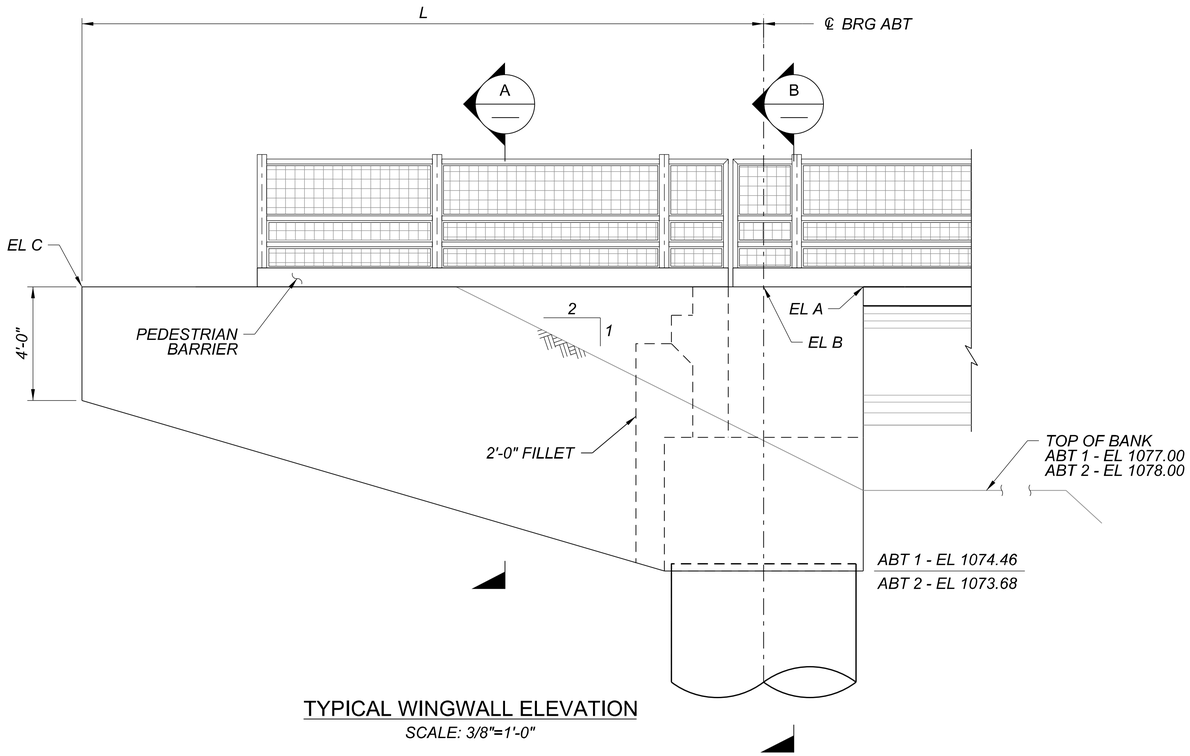

TYPICAL WINGWALL ELEVATION

SCALE: 3/8"=1'-0"

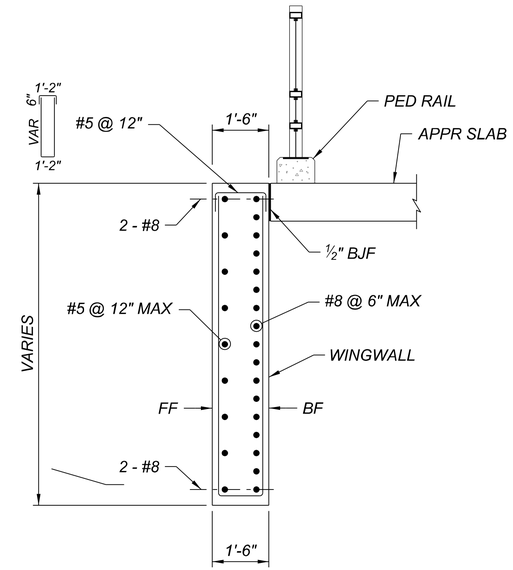

WINGWALL DETAIL (A)

SCALE: 1/2"=1'-0"

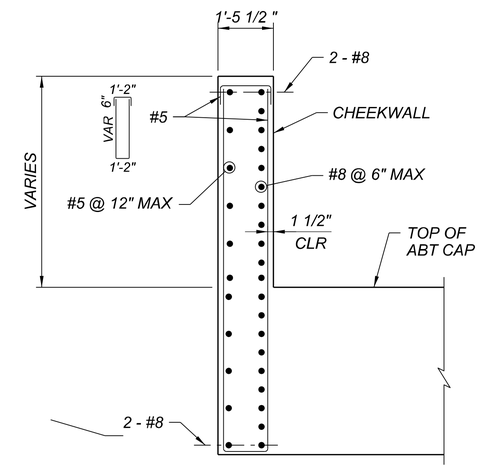

CHEEKWALL DETAIL (B)

SCALE: 1/2"=1'-0"

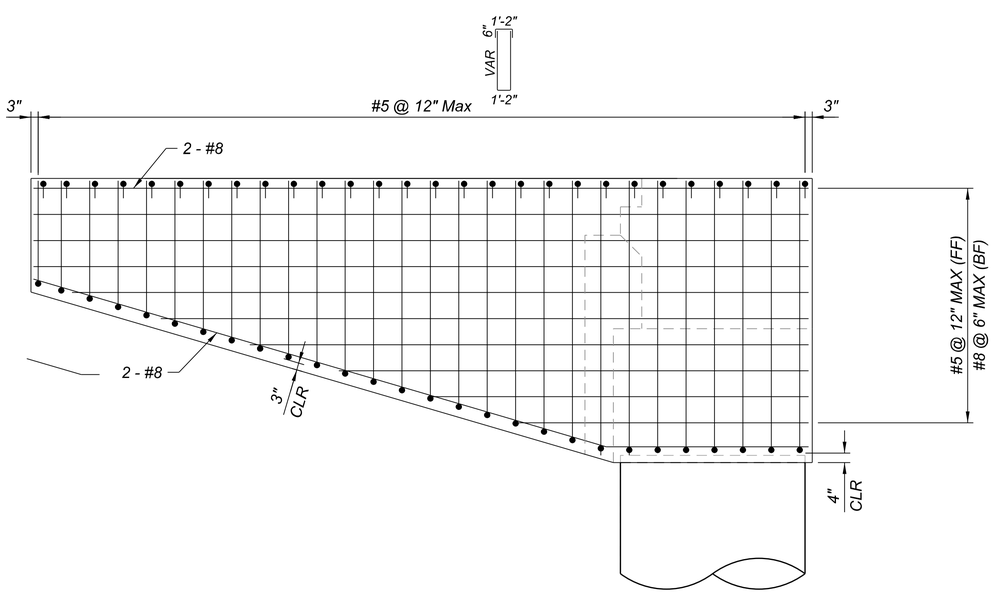

TYPICAL REINFORCING ELEVATION

SCALE: 3/8"=1'-0"

WINGWALL ELEVATIONS				
LOCATION	L	EL A	EL B	EL C
ABT 1	24'-0"	1084.53	1084.51	1084.34
ABT 2	20'-0"	1083.76	1083.72	1083.50

Contact Arizona 811 Two Working Days Before You Dig
ARIZONA811 BLUE STAKE, INC.
Call 811 or Click Arizona811.com

NO.	REVISION	BY	DATE
3			
2			
1			

MARICOPA COUNTY

NORTHERN PARKWAY
103RD AVENUE TO 91ST AVENUE - PHASE 1
PROJECT NO. TT0372

	BY	DATE
DESIGNED	AO	04/2026
DRAWN	BR	04/2026
CHECKED	KLH	04/2026

Registered Professional Engineer (Civil) CERTIFICATE NO. 37068 KOOI-LIM HOE Date Signed 4/29/2026 ARIZONA, U.S.A.

TYLin

WINGWALL DETAILS

SHEET SB13

TRACS NO.

Brandon Rudolph OpenRoads_Imperial 3:44:28 PM 4/29/2026 MCDOT_TYLIN_HALF_PRINT.tbl TYLI_GN_bwpdf Half.pltcfg
c:\bmstylin-pw\brandon.rudolph@tylin.com\d057\3062\TT0372_SB_NewRiver_13wwd.dgn

F.H.W.A. REGION	STATE	PROJECT NO.	SHEET NO.	TOTAL SHEETS	RECORD DRAWING
9	AZ	TT0372	158	224	

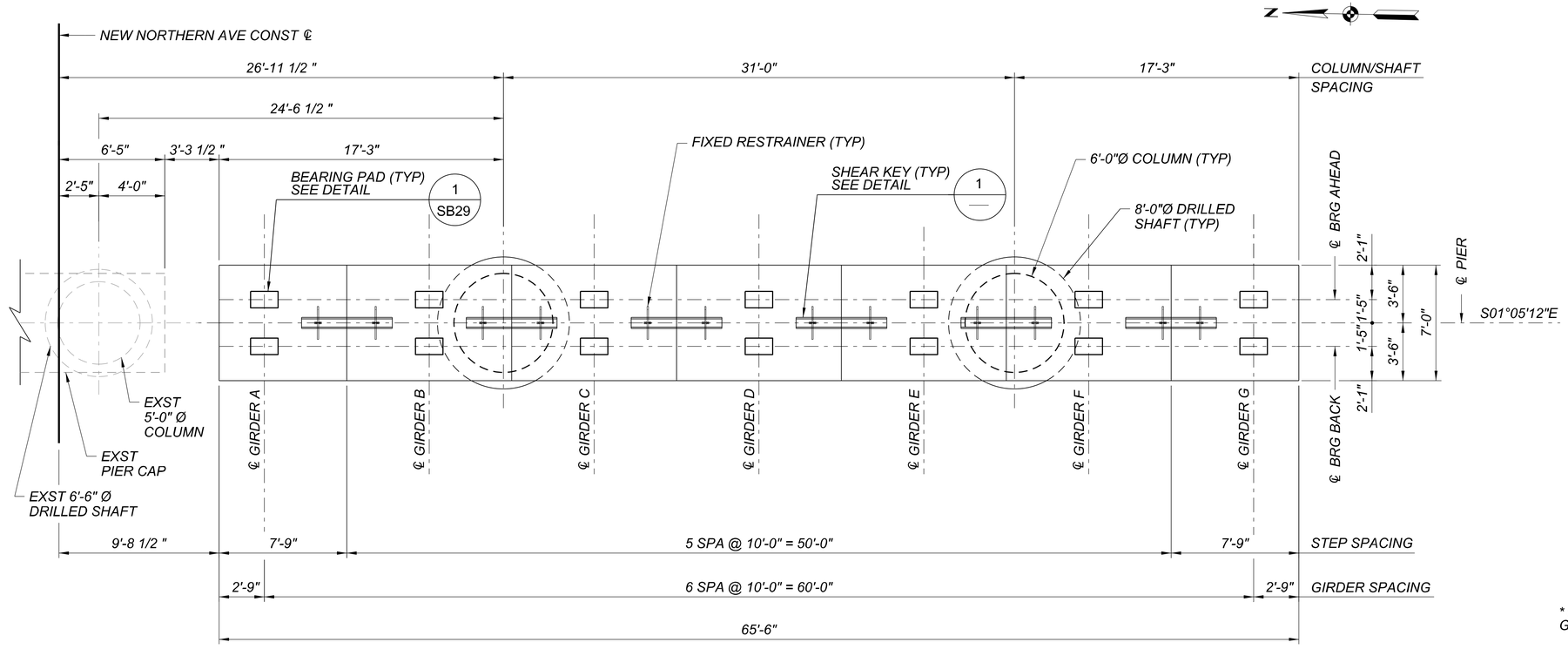

TYPICAL PIER PLAN

SCALE: 1/4"=1'-0"

PIER CAP ELEVATION - GIRDER SEAT							
PIER	A	B	C	D	E	F	G
1	1080.87	1080.67	1080.47	1080.27	1080.07	1079.87	1079.67
2	1080.89	1080.69	1080.49	1080.29	1080.09	1079.89	1079.69
3	1080.48	1080.28	1080.08	1079.88	1079.68	1079.48	1079.28

TOP OF COLUMN ELEV		
PIER	K	L
1	1074.48	1073.86
2	1074.50	1073.88
3	1074.09	1073.47

SOFFIT ELEV		
PIER	H	J
1	1074.59	1073.75
2	1074.61	1073.77
3	1074.20	1073.36

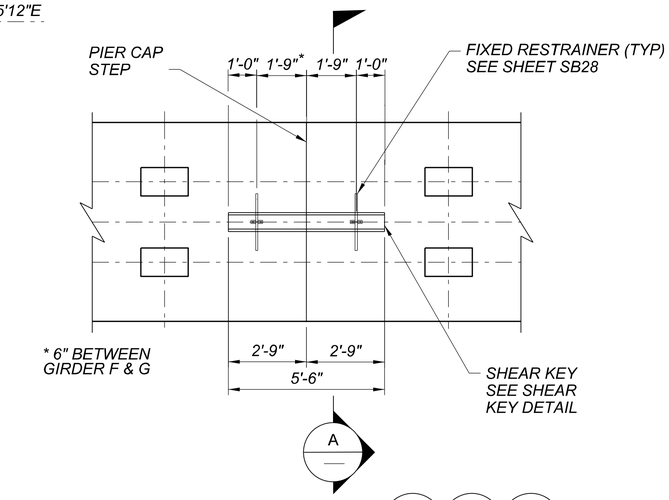

SHEAR KEY DETAIL

SCALE: 1/4"=1'-0"

1 — 1 SB25 1 SB26

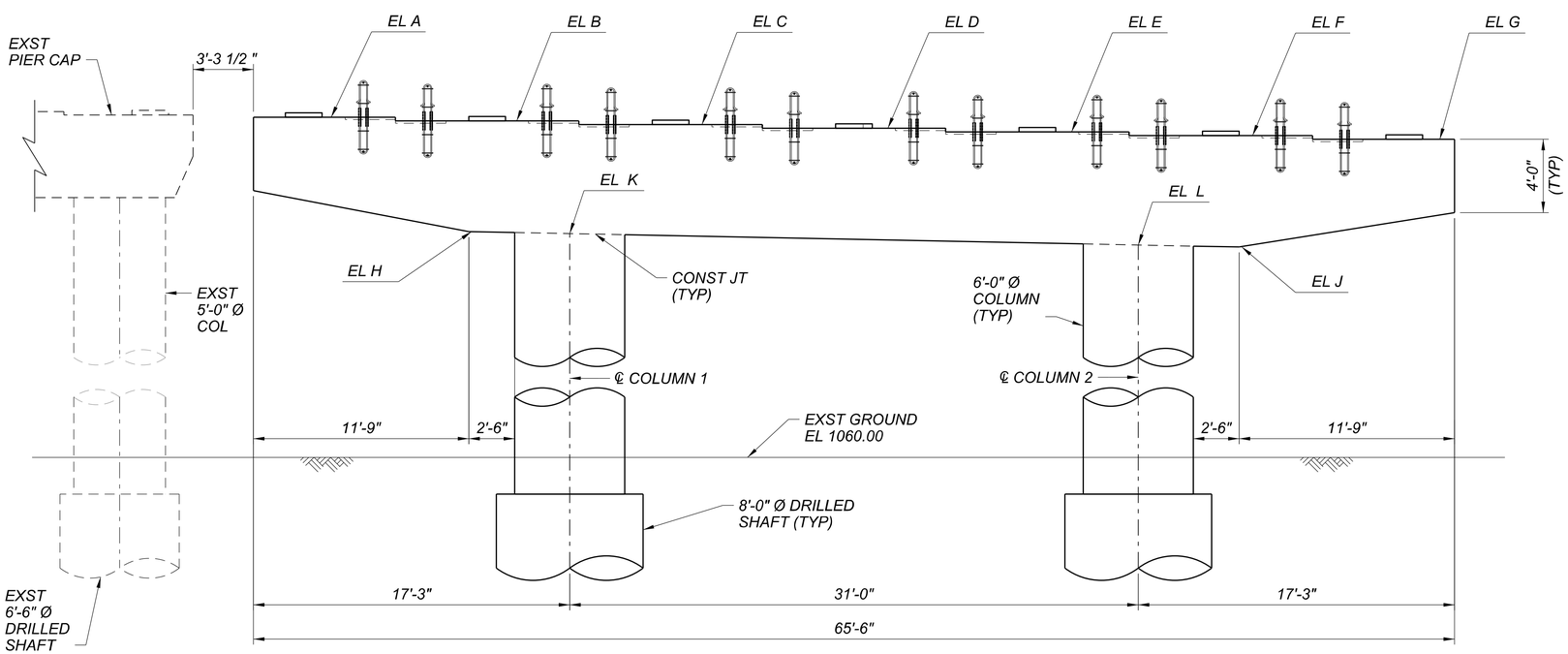

TYPICAL PIER ELEVATION

(LOOKING AHEAD)
SCALE: 1/4"=1'-0"

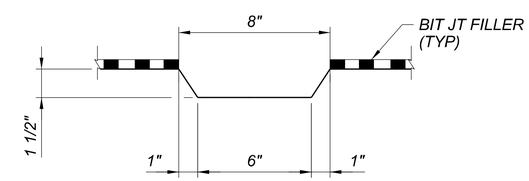

SECTION

NOT TO SCALE

A —

Contact Arizona 811 Two Working Days Before You Dig
ARIZONA811 BLUE STAKE, INC.
Call 811 or Click Arizona811.com

NO.	REVISION	BY	DATE
3			
2			
1			

MARICOPA COUNTY

NORTHERN PARKWAY
103RD AVENUE TO 91ST AVENUE - PHASE 1
PROJECT NO. TT0372

	BY	DATE
DESIGNED	AO	04/2026
DRAWN	BR	04/2026
CHECKED	KLH	04/2026

Registered Professional Engineer (Civil) CERTIFICATE NO. 37868 KOOI-LIM HOE Date Signed 4/29/2026 ARIZONA, U.S.A.

TYLin

PIER PLAN AND ELEVATION

SHEET SB14

TRACS NO.

c:\bmstyli-pw\brandon.rudolph@tylin.com\d0573062\TT0372_SB_NewRiver_14pp.dgn Brandon Rudolph OpenRoads_Imperial 3:44:42 PM 4/29/2026 MCDOT_TYLIN_HALF_PRINT.tbl TYLI_GN_bwpdf Half.pltcfg

F.H.W.A. REGION	STATE	PROJECT NO.	SHEET NO.	TOTAL SHEETS	RECORD DRAWING
9	AZ	TT0372	159	224	

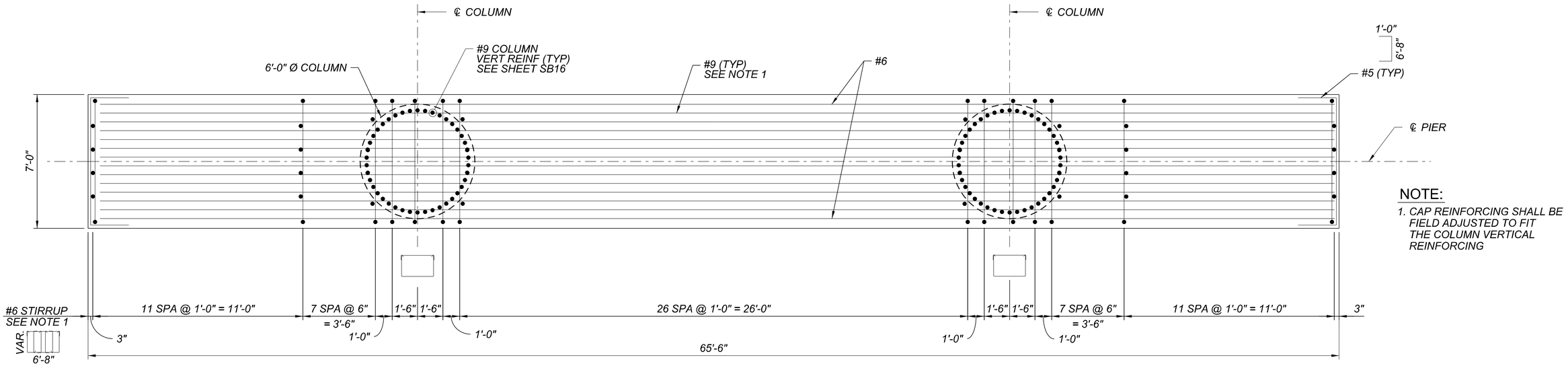

SECTION A

SCALE: 3/8"=1'-0"

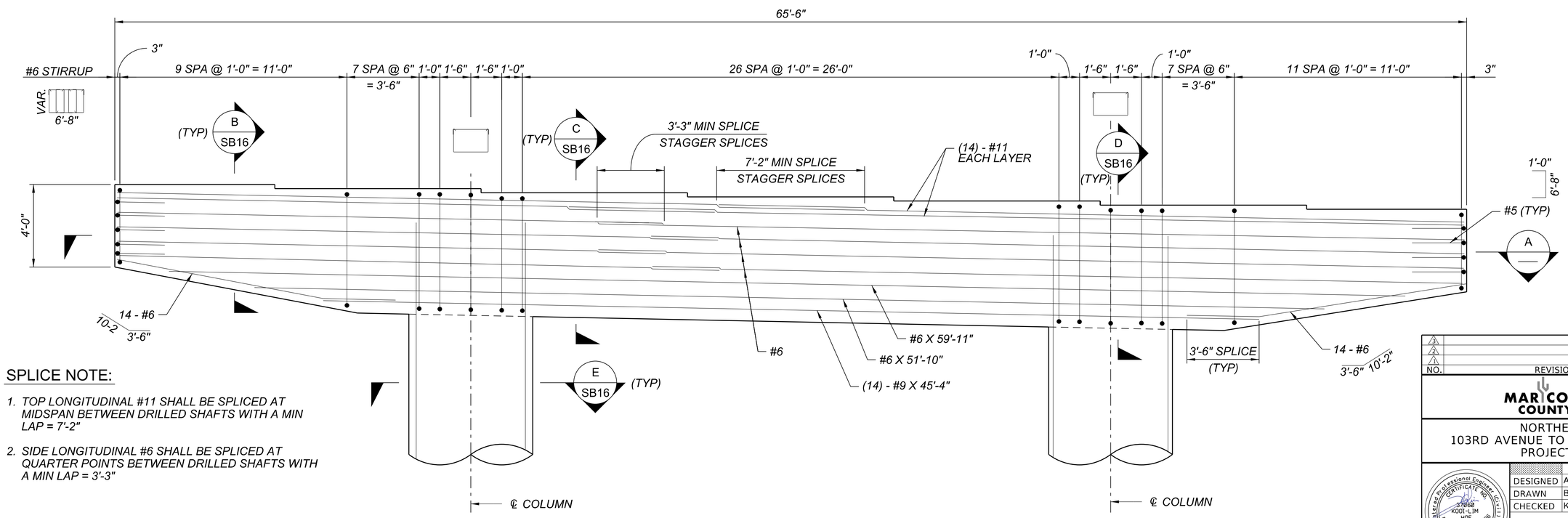

ELEVATION - PIER

SCALE: 3/8"=1'-0"

NOTE:

1. CAP REINFORCING SHALL BE FIELD ADJUSTED TO FIT THE COLUMN VERTICAL REINFORCING

SPLICE NOTE:

1. TOP LONGITUDINAL #11 SHALL BE SPLICED AT MIDSPAN BETWEEN DRILLED SHAFTS WITH A MIN LAP = 7'-2"
2. SIDE LONGITUDINAL #6 SHALL BE SPLICED AT QUARTER POINTS BETWEEN DRILLED SHAFTS WITH A MIN LAP = 3'-3"

Contact Arizona 811 Two Working Days Before You Dig
ARIZONA811 BLUE STAKE, INC.
Call 811 or Click Arizona811.com

NO.	REVISION	BY	DATE
3			
2			
1			

MARICOPA COUNTY

NORTHERN PARKWAY
103RD AVENUE TO 91ST AVENUE - PHASE 1
PROJECT NO. TT0372

	BY	DATE
DESIGNED	AO	04/2026
DRAWN	BR	04/2026
CHECKED	KLH	04/2026

Registered Professional Engineer (Civil) CERTIFICATE NO. 37868 KOOI-LIM HOE Date Signed 4/29/2026 ARIZONA, U.S.A.

TYLin

PIER DETAILS 1

SHEET SB15

TRACS NO.

c:\bmstyli-pw\brandon.rudolph@tylin.com\d0573062\TT0372_SB_NewRiver_15pd1.dgn Brandon Rudolph OpenRoads_Imperial 3:44:57 PM 4/29/2026 MCDOT_TYLIN_HALF_PRINT.tbl TYLI_GN_bwpdf Half.pltcfg

F.H.W.A. REGION	STATE	PROJECT NO.	SHEET NO.	TOTAL SHEETS	RECORD DRAWING
9	AZ	TT0372	160	224	

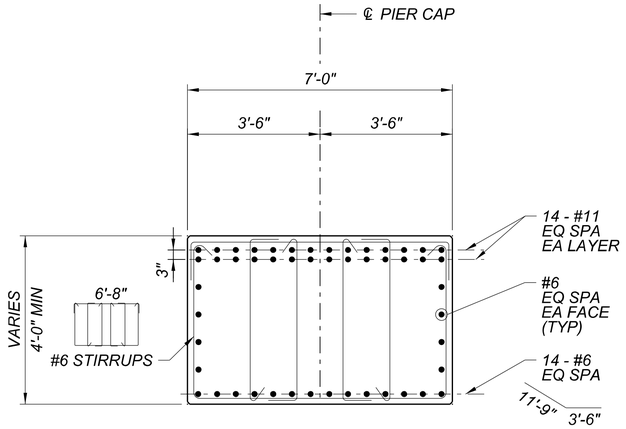

SECTION B / SB15
SCALE: 1/2"=1'-0"

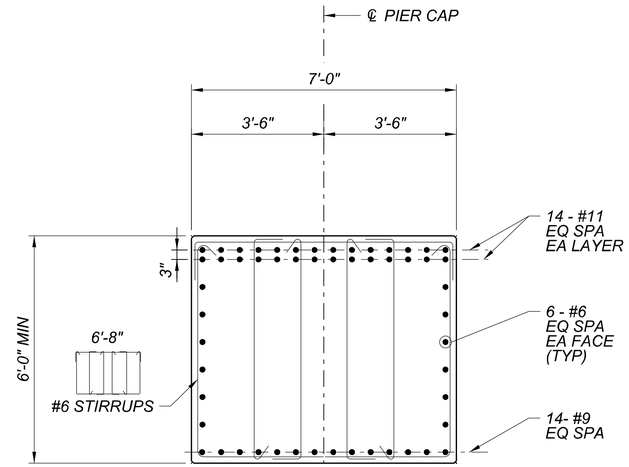

SECTION C / SB15
SCALE: 1/2"=1'-0"

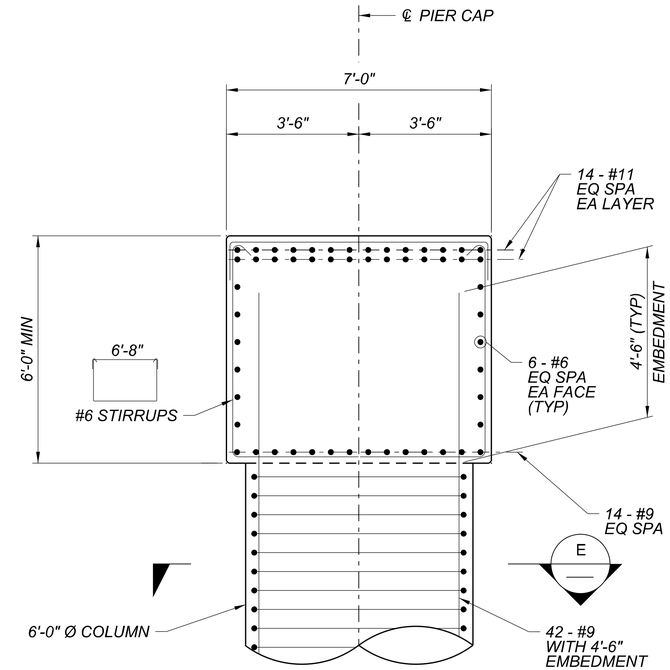

SECTION D / SB15
SCALE: 1/2"=1'-0"

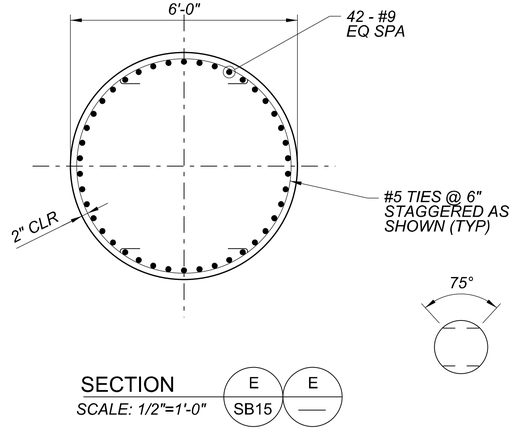

SECTION E / SB15 — E
SCALE: 1/2"=1'-0"

Contact Arizona 811 Two Working Days Before You Dig
ARIZONA811 BLUE STAKE, INC.
Call 811 or Click Arizona811.com

NO.	REVISION	BY	DATE
3			
2			
1			

MARICOPA COUNTY

NORTHERN PARKWAY
103RD AVENUE TO 91ST AVENUE - PHASE 1
PROJECT NO. TT0372

	BY	DATE
DESIGNED	AO	04/2026
DRAWN	BR	04/2026
CHECKED	KLH	04/2026

Registered Professional Engineer (Civil)
CERTIFICATE NO. 37968
KOOI-LIM HOE
Date Signed 4/29/2026
ARIZONA, U.S.A.

TYLin

PIER DETAILS 2

SHEET SB16

TRACS NO.

c:\bms\tylin-pw\brandon.rudolph@tylin.com\d0573062\TT0372_SB_NewRiver_16pd2.dgn
Brandon Rudolph OpenRoads_Imperial 3:45:11 PM 4/29/2026 MCDOT_TYLIN_HALF_PRINT.tbl TYLI_GN_bwpdf Half.pltcfg

F.H.W.A. REGION	STATE	PROJECT NO.	SHEET NO.	TOTAL SHEETS	RECORD DRAWING
9	AZ	TT0372	161	224	

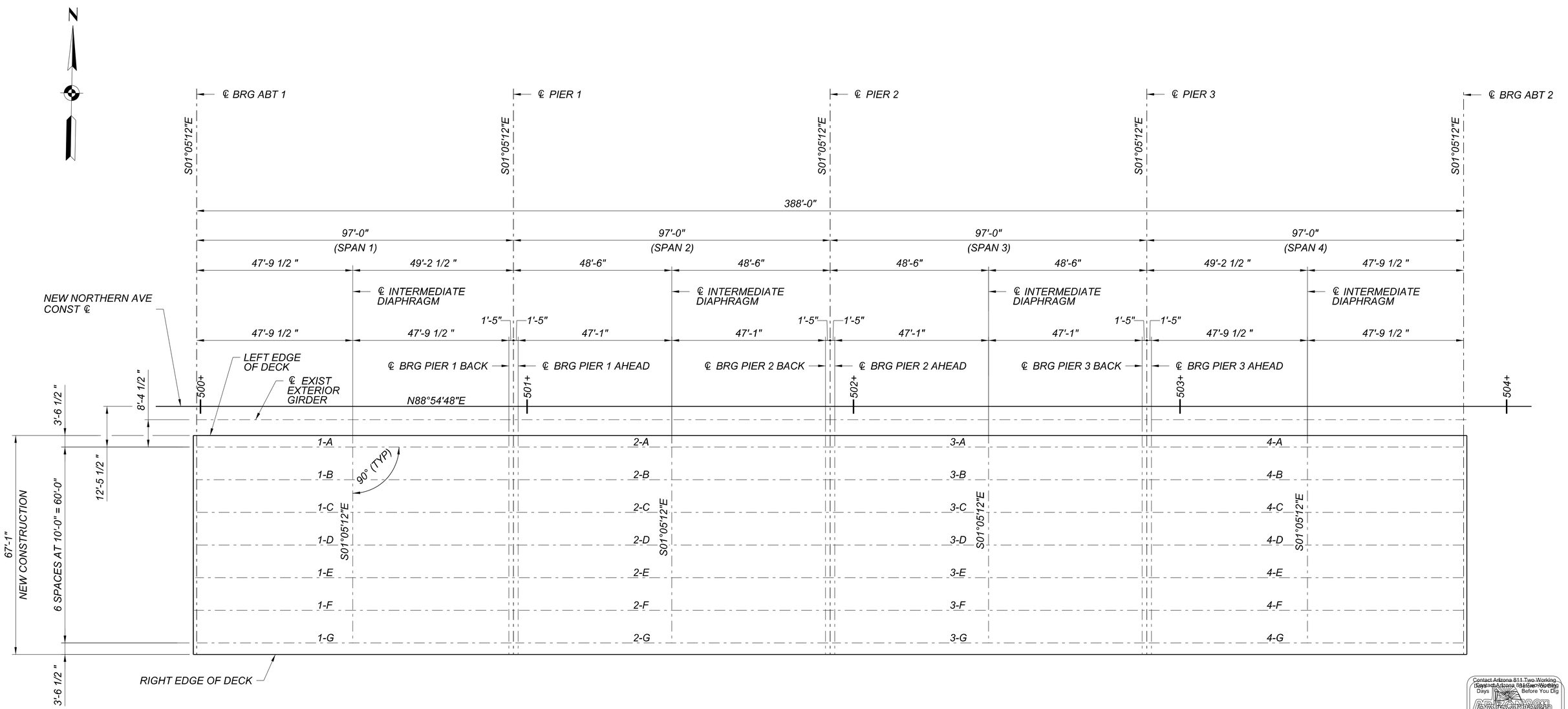

FRAMING PLAN

SCALE: 1"=15'-0"

Contact Arizona 811 Two Working Days Before You Dig
Call 811 or Click Arizona811.com

NO.	REVISION	BY	DATE
3			
2			
1			

MARICOPA COUNTY

NORTHERN PARKWAY
103RD AVENUE TO 91ST AVENUE - PHASE 1
PROJECT NO. TT0372

	BY	DATE
DESIGNED	AO	04/2026
DRAWN	BR	04/2026
CHECKED	KLH	04/2026

Registered Professional Engineer (Civil)
CERTIFICATE NO. 37068
KOOI-LIM HOE
Date Signed 4/29/2026
ARIZONA, U.S.A.

TYLin

FRAMING PLAN

SHEET SB17

TRACS NO.

c:\bmstylin-pw\brandon.rudolph@tylin.com\d0573062\TT0372_SB_NewRiver_17fp.dgn Brandon Rudolph OpenRoads_Imperial 3:45:25 PM 4/29/2026 MCDOT_TYLIN_HALF_PRINT.tbl TYLI_GN_bwpdf Half.pltcfg

F.H.W.A. REGION	STATE	PROJECT NO.	SHEET NO.	TOTAL SHEETS	RECORD DRAWING
9	AZ	TT0372	162	224	

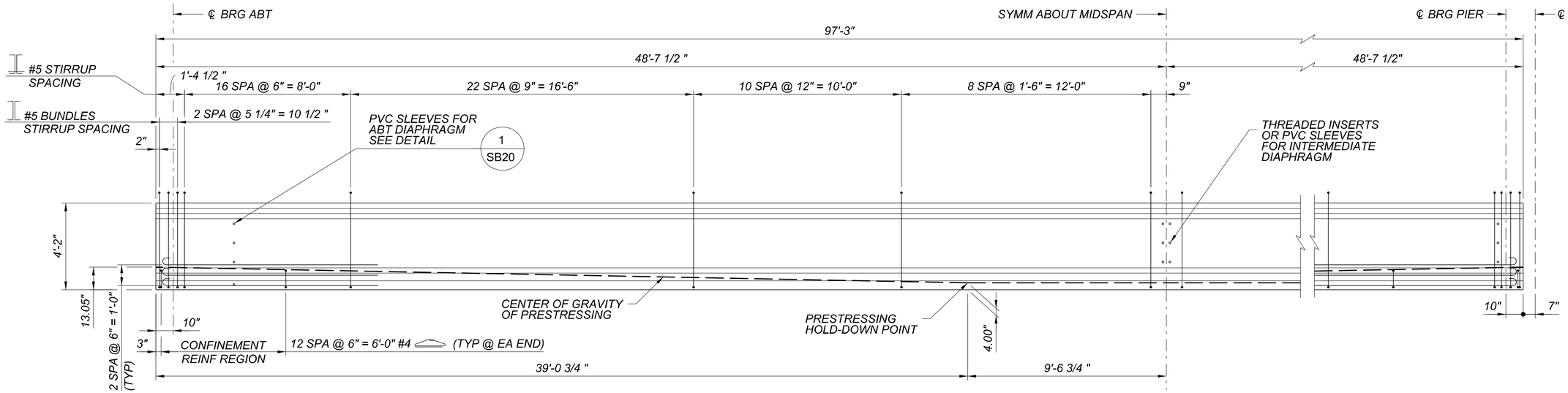

ABUTMENT END

PIER END

BT50 GIRDER ELEVATION SPAN 1 & 4

SCALE: 3/8"=1'-0"

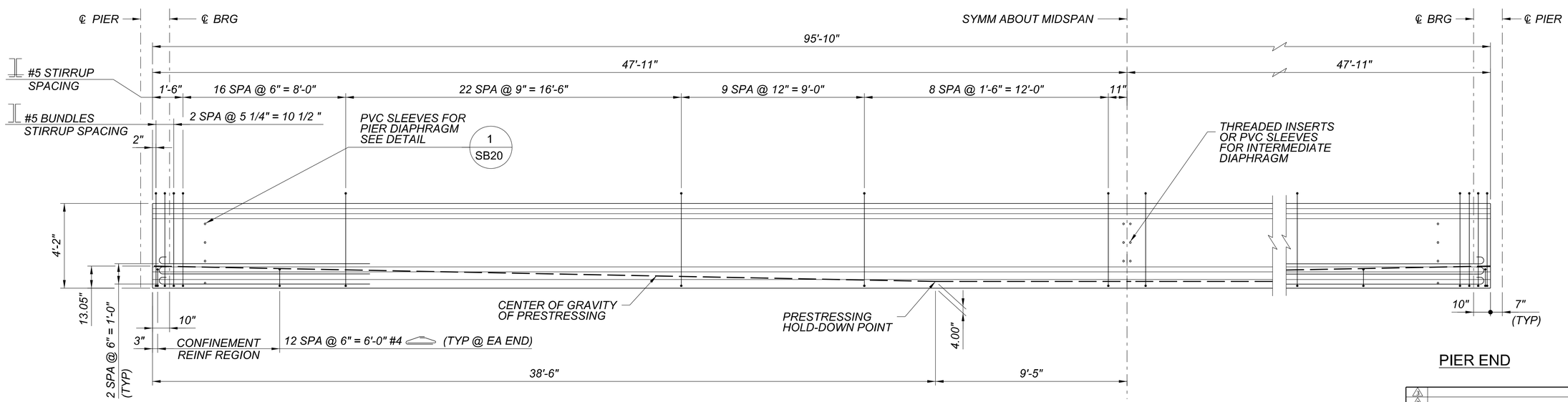

PIER END

PIER END

BT50 GIRDER ELEVATION SPAN 2 & 3

SCALE: 3/8"=1'-0"

Contact Arizona 811 Two Working Days Before You Dig
Call 811 or Click Arizona811.com

PRESTRESSING GIRDER NOTES

GIRDER DETAILS:

THE GIRDER LENGTH SHOWN DOES NOT INCLUDE ELASTIC SHORTENING EFFECTS. CASTING LENGTHS SHALL BE INCREASED AS NECESSARY TO ACCOUNT FOR SHORTENING EFFECTS. THE CONTACT SURFACE OF THE TOP FLANGE SHALL BE ROUGHENED TO A DEPTH APPROXIMATELY 1/4" INCH.

GIRDER END SHALL BE CAST VERTICAL.

STRANDS:

0.6" DIA ASTM A416 GRADE 270 7-WIRE LOW RELAXATION PRESTRESSING STRAND WITH INITIAL STRAND TENSION EQUAL TO 43.942 LBS (0.75FPU).
Fpu = 270 KSI
NOMINAL AREA OF STRAND = 0.217 SQ. IN.

PRESTRESSING FORCE:

Pi = 1,846 KIPS INITIAL FORCE PER GIRDER AT TRANSFER.
Pw = 1,373 KIPS WORKING FORCE - TOTAL FORCE REMAINING PER GIRDER AFTER LOSSES.

PRESTRESSING:

ALL GIRDERS SHALL BE PRESTRESSED BY THE PRETENSIONING METHOD ONLY.

CONCRETE STRENGTH:

f'ci = 7.5 KSI MINIMUM STRENGTH AT TRANSFER.
f'c = 9.5 KSI MINIMUM STRENGTH AT 28 DAYS.

NO.	REVISION	BY	DATE
3			
2			
1			

MARICOPA COUNTY

NORTHERN PARKWAY
103RD AVENUE TO 91ST AVENUE - PHASE 1
PROJECT NO. TT0372

	BY	DATE
DESIGNED	AO	04/2026
DRAWN	BR	04/2026
CHECKED	KLH	04/2026

Registered Professional Engineer (Civil) CERTIFICATE NO. 37868 KOOT-LIM HOE Date Signed 4/29/2026 ARIZONA, U.S.A.

TYLin

GIRDER DETAILS 1

SHEET SB18

TRACS NO.

c:\bms\tyli-pw\brandon.rudolph@tylin.com\d0573062\TT0372_SB_NewRiver_18gd1.dgn Brandon Rudolph OpenRoads_Imperial 3:45:40 PM 4/29/2026 MCDOT_TYLIN_HALF_PRINT.tbl TYLI_GN_bwpdf Half.pltcfg

F.H.W.A. REGION	STATE	PROJECT NO.	SHEET NO.	TOTAL SHEETS	RECORD DRAWING
9	AZ	TT0372	163	224	

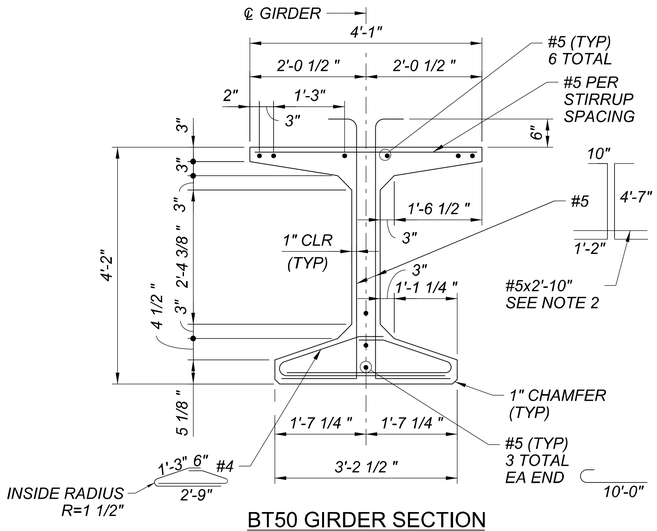

BT50 GIRDER SECTION

SCALE: 3/4"=1'-0"

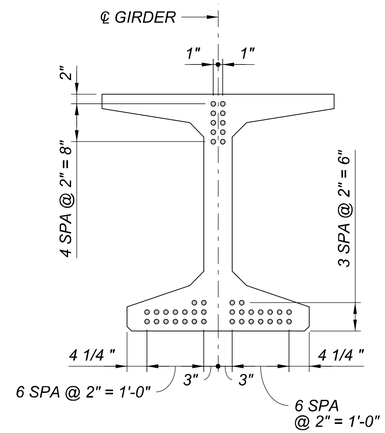

SECTION THRU END

SCALE: 3/4"=1'-0"

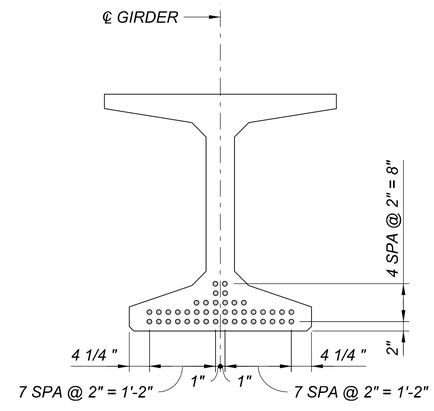

AT MIDSPAN

SCALE: 3/4"=1'-0"

STRAND PATTERN

(42 - 0.6" DIA 270 KSI LOW RELAXATION STRANDS)
SCALE: 3/4"=1'-0"

NOTES:

1. SIZE OF REBAR & STRAND IS EXAGGERATED FOR CLARITY PURPOSE.
2. OMIT #5 x 2'-10" WITHIN THE CONFINEMENT REINFORCING REGION AT BOTH ENDS.

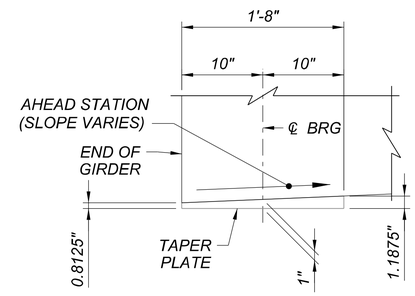

ABUTMENT 1

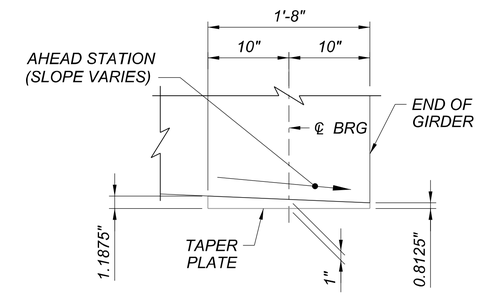

ABUTMENT 2

SECTION C
NOT TO SCALE

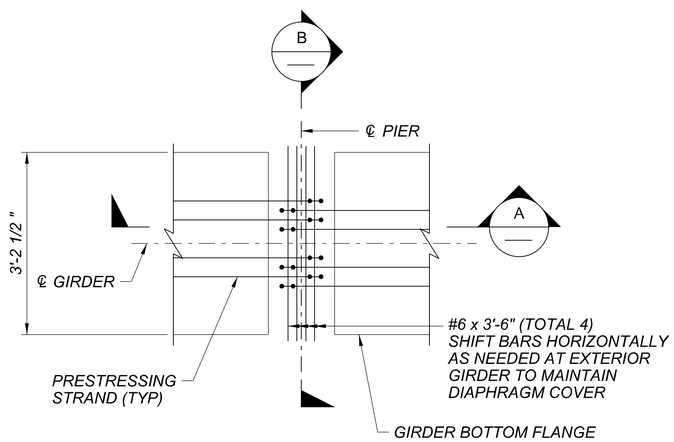

PLAN

SCALE: 3/4"=1'-0"

TYPICAL END OF GIRDER DETAIL AT FIXED PIER (2 / SB25)

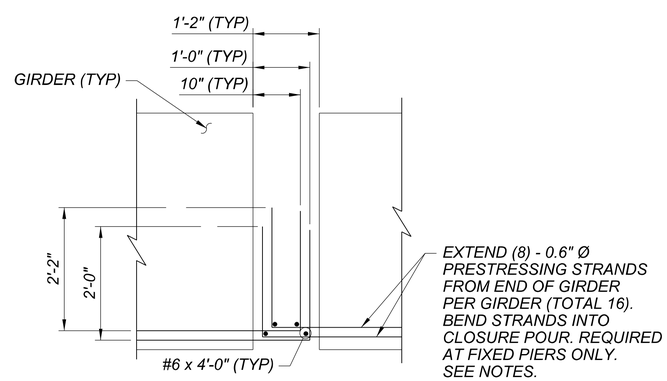

SECTION A

SCALE: 3/4"=1'-0"

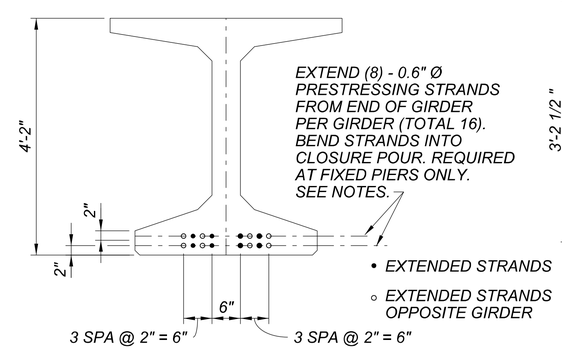

SECTION B

SCALE: 3/4"=1'-0"

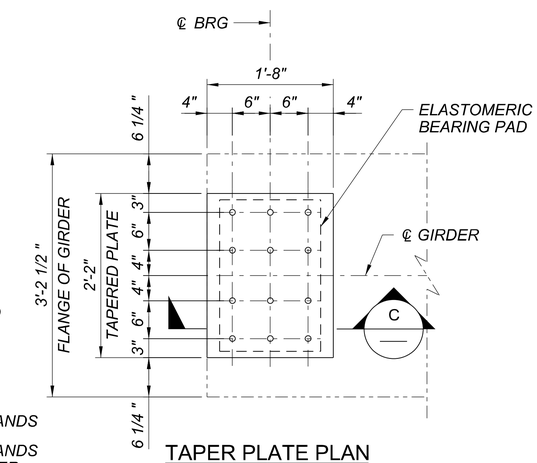

TAPER PLATE PLAN

SCALE: 1"=1'-0"

NOTES:

1. ALL STRANDS NOT REQUIRED TO BE EXTENDED SHALL BE CUT FLUSH WITH THE GIRDER ENDS AND THE EXPOSED STEEL AT CUT ENDS SHALL BE PROTECTED WITH AN ASPHALT COATING.
2. FOR BENDING OF STRANDS, HEAT BENDING OR CUTTING WILL NOT BE ALLOWED.
3. MIN. AGE OF PRECAST GIRDER WHEN CONTINUITY IS ESTABLISHED = 60 DAYS

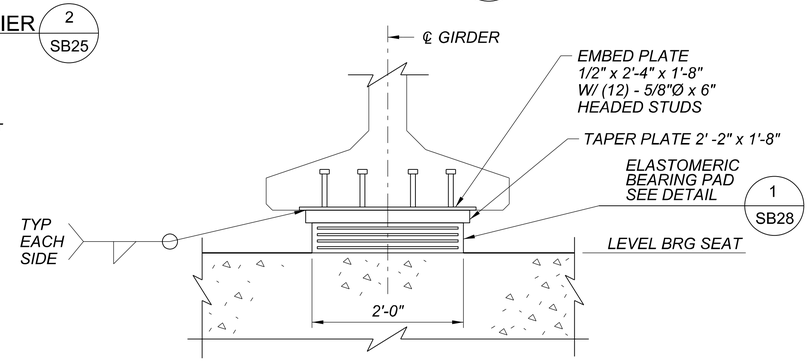

ABUTMENT GIRDER SEAT DETAILS

SCALE: 1" =1'-0"

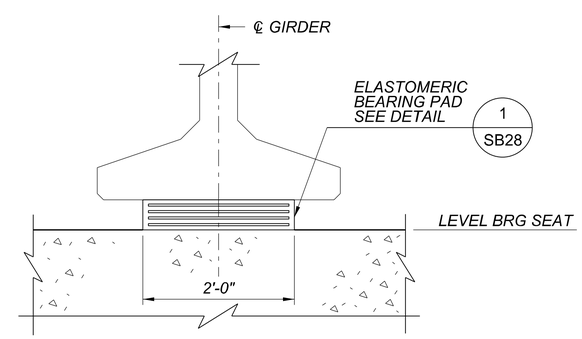

PIER GIRDER SEAT DETAILS

SCALE: 1" =1'-0"

Contact Arizona 811 Two Working Days Before You Dig
ARIZONA811 BLUE STAKE, INC.
Call 811 or Click Arizona811.com

NO.	REVISION	BY	DATE
3			
2			
1			

MARICOPA COUNTY

NORTHERN PARKWAY
103RD AVENUE TO 91ST AVENUE - PHASE 1
PROJECT NO. TT0372

	BY	DATE
DESIGNED	AO	04/2026
DRAWN	BR	04/2026
CHECKED	KLH	04/2026

Registered Professional Engineer (Civil) CERTIFICATE NO. 37860 KOOI-LIM HOE Date Signed 4/29/2026 ARIZONA, U.S.A.

TYLin

GIRDER DETAILS 2

SHEET SB19

TRACS NO.

c:\bmstyli-pw\brandon.rudolph@tylin.com\d0573062\TT0372_SB_NewRiver_19gd2.dgn Brandon.Rudolph OpenRoads_Imperial 3:45:53 PM 4/29/2026 MCDOT_TYLIN_HALF_PRINT.tbl TYLI_GN_bwpdf Half.pltcfg

F.H.W.A. REGION	STATE	PROJECT NO.	SHEET NO.	TOTAL SHEETS	RECORD DRAWING
9	AZ	TT0372	164	224	

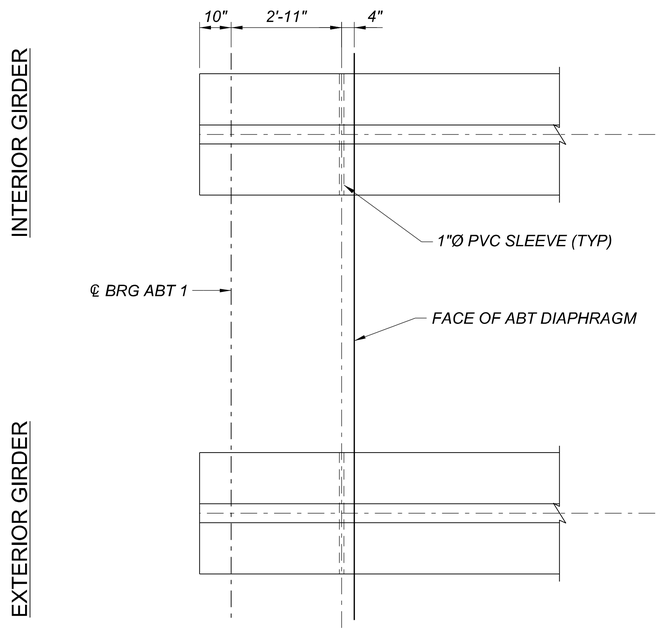

PLAN AT ABUTMENT

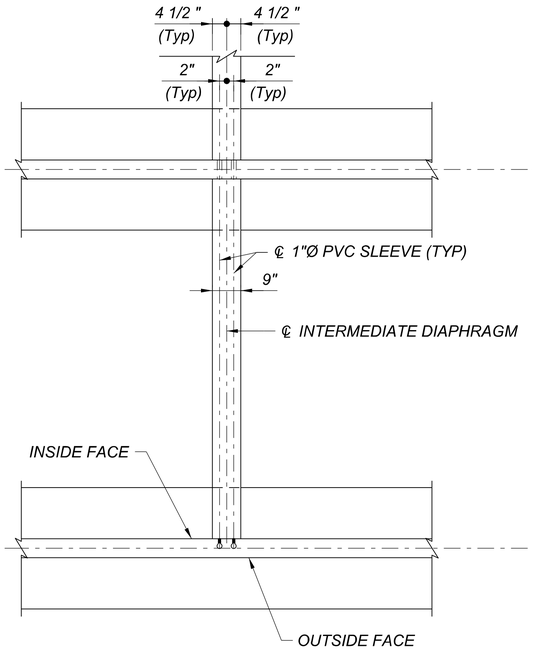

PLAN AT INTERMEDIATE DIAPHRAGM

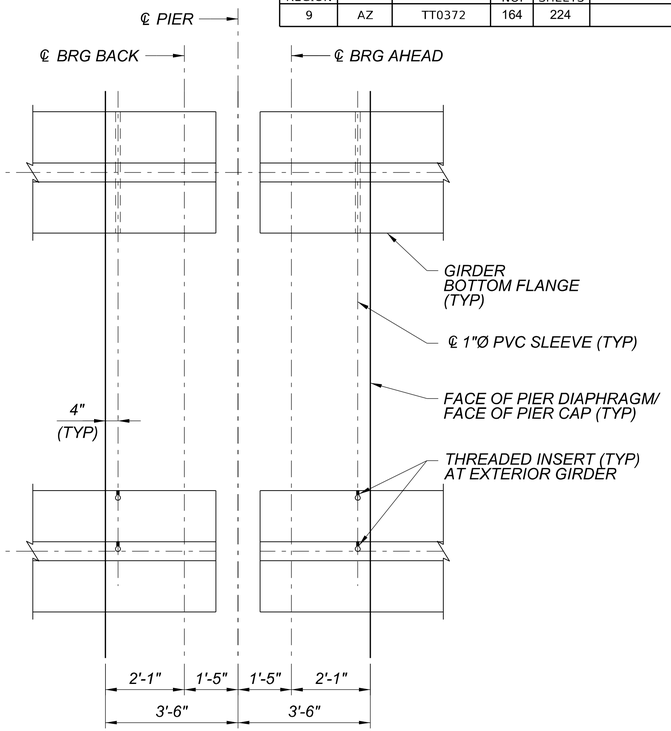

PLAN AT PIER

SLEEVE AND INSERT PLACEMENT DETAILS (1 / SB18)

SCALE: 1/2" = 1'-0"

NOTES:

1. THREADED INSERTS ARE FERRULE LOOP INSERTS FOR THREADED #6 REBAR. INSERTS SHALL DEVELOP AN ULTIMATE PULLOUT STRENGTH OF 10.56 KIPS.
2. SLEEVES AND THREADED INSERTS HAVE BEEN LOCATED ASSUMING THEY ARE NORMAL TO GIRDER.

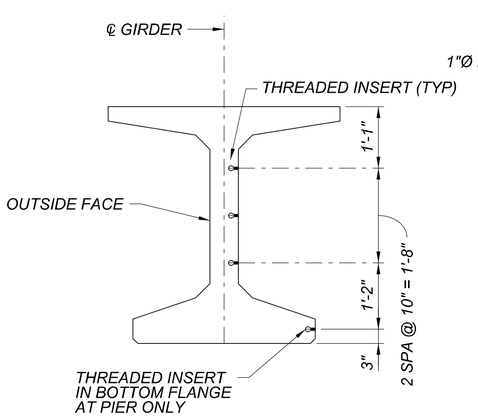

PIER EXTERIOR GIRDER INSERT DETAIL

SCALE: 3/4" = 1'-0"

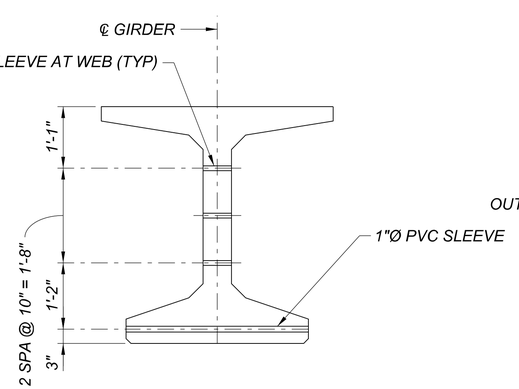

TYPICAL GIRDER SLEEVE DETAIL

SCALE: 3/4" = 1'-0"

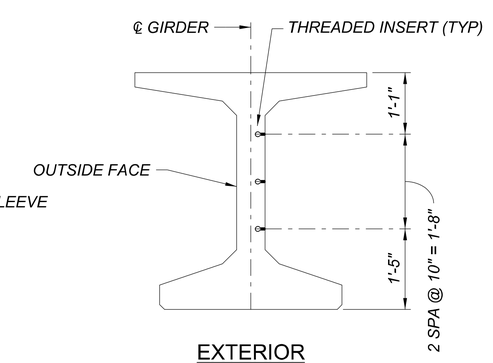

EXTERIOR

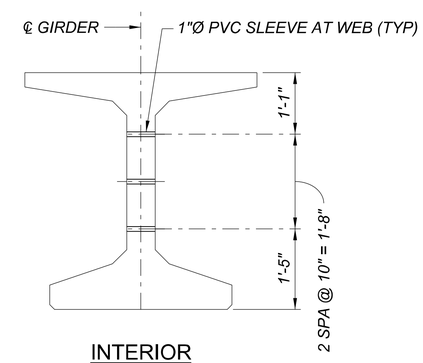

INTERIOR

GIRDER INSERT/SLEEVE DETAILS AT INTERMEDIATE DIAPHRAGM

SCALE: 3/4" = 1'-0"

Contact Arizona 811 Two Working Days Before You Dig
ARIZONA811 BLUE STAKE, INC.
Call 811 or Click Arizona811.com

NO.	REVISION	BY	DATE
3			
2			
1			

MARICOPA COUNTY

NORTHERN PARKWAY
103RD AVENUE TO 91ST AVENUE - PHASE 1
PROJECT NO. TT0372

	BY	DATE
DESIGNED	AO	04/2026
DRAWN	BR	04/2026
CHECKED	KLH	04/2026

Registered Professional Engineer (Civil) CERTIFICATE NO. 37968 KOOI-LIM HOE Date Signed 4/29/2026 ARIZONA, U.S.A.

TYLin

GIRDER DETAILS 3

SHEET SB20

TRACS NO.

c:\bmstyli-pw\brandon.rudolph@tylin.com\d0573062\TT0372_SB_NewRiver_20gd3.dgn Brandon Rudolph OpenRoads_Imperial 3:46:07 PM 4/29/2026 MCDOT_TYLIN_HALF_PRINT.tbl TYLI_GN_bwpdf Half.pltcfg

F.H.W.A. REGION	STATE	PROJECT NO.	SHEET NO.	TOTAL SHEETS	RECORD DRAWING
9	AZ	TT0372	165	224	

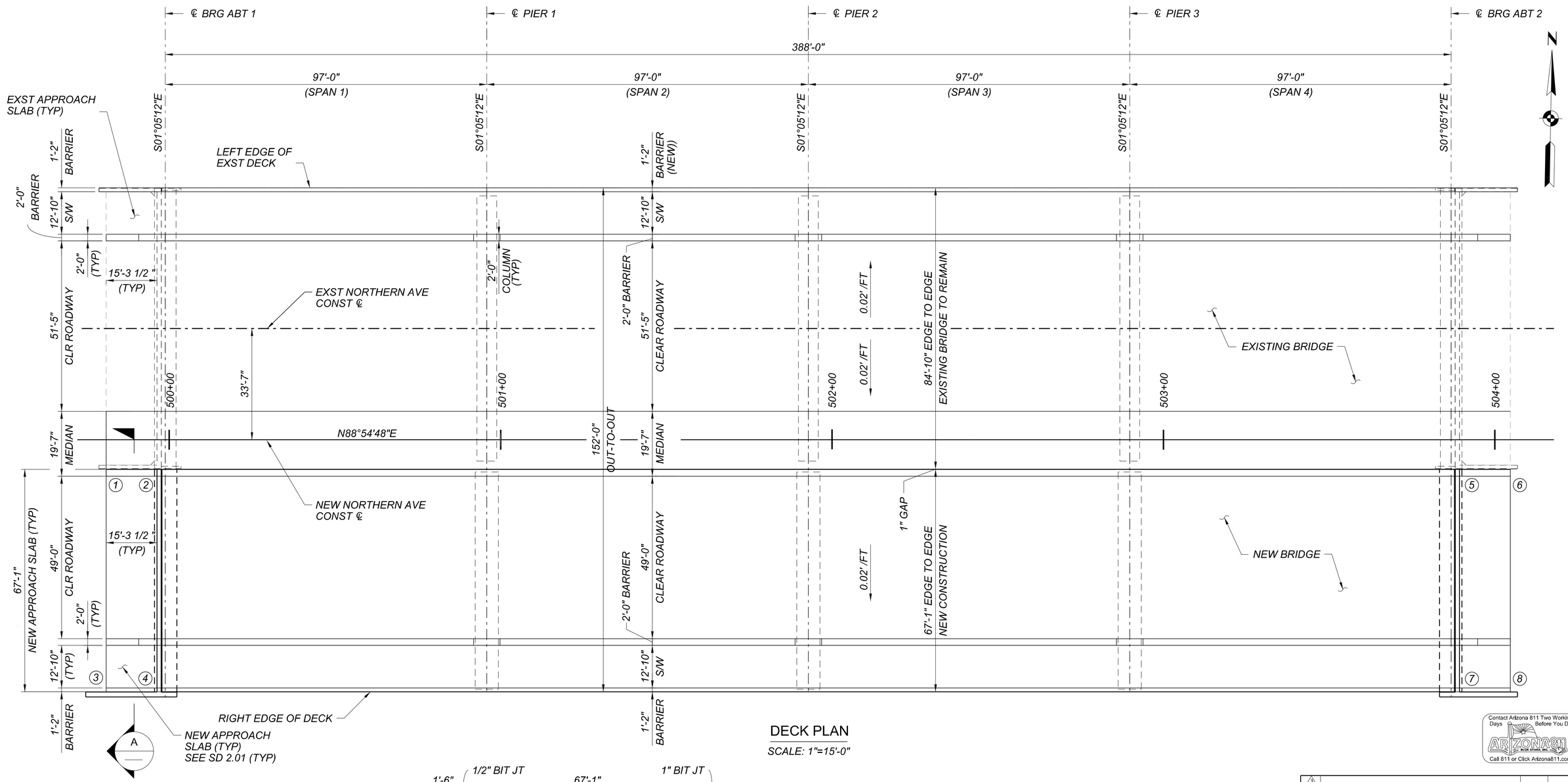

DECK PLAN

SCALE: 1"=15'-0"

APPROACH SLAB LOCATION			
LOCATION	LOCATION	OFFSET	ELEVATION
1	499+81.00	8.92'	1085.72
2	499+96.29	8.92'	1085.83
3	499+81.00	76.00'	1084.38
4	499+96.29	76.00'	1084.49
5	503+89.37	8.92'	1085.04
6	504+04.66	8.92'	1084.87
7	503+89.37	76.00'	1083.69
8	504+04.66	76.00'	1083.52

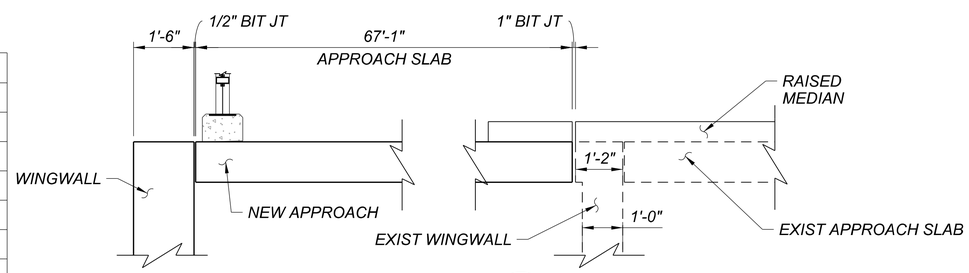

SECTION A

NO.	REVISION	BY	DATE
3			
2			
1			

MARICOPA COUNTY

NORTHERN PARKWAY
103RD AVENUE TO 91ST AVENUE - PHASE 1
PROJECT NO. TT0372

	BY	DATE
DESIGNED	AO	04/2026
DRAWN	BR	04/2026
CHECKED	KLH	04/2026

TYLin

DECK PLAN

SHEET SB21

TRACS NO.

Contact Arizona 811 Two Working Days Before You Dig
Call 811 or Click Arizona811.com

c:\bms\tylin-pw\brandon.rudolph@tylin.com\d0573062\TT0372_SB_NewRiver_21dp.dgn
Brandon Rudolph OpenRoads_Imperial 3:46:23 PM 4/29/2026 MCDOT_TYLIN_HALF_PRINT.tbl TYLI_GN_bwpdf Half.pltcfg

F.H.W.A. REGION	STATE	PROJECT NO.	SHEET NO.	TOTAL SHEETS	RECORD DRAWING
9	AZ	TT0372	166	224	

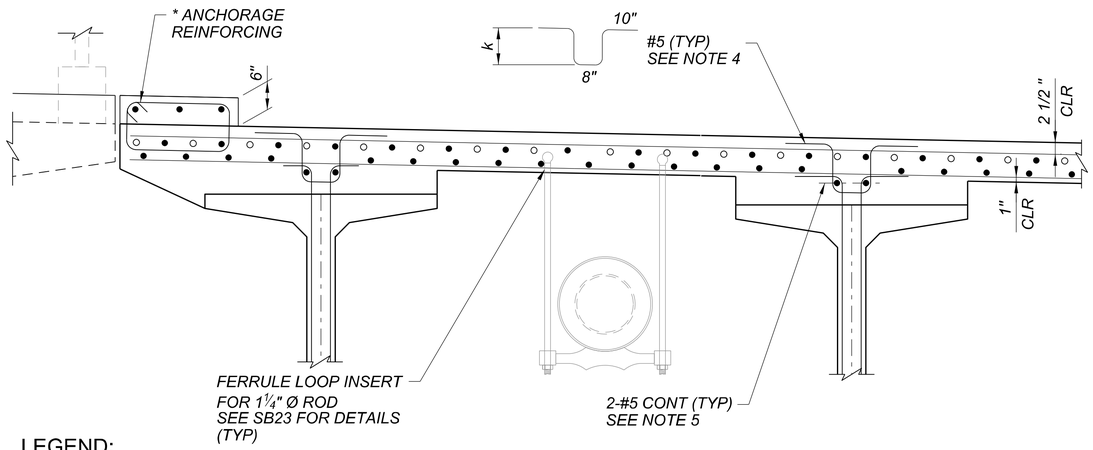

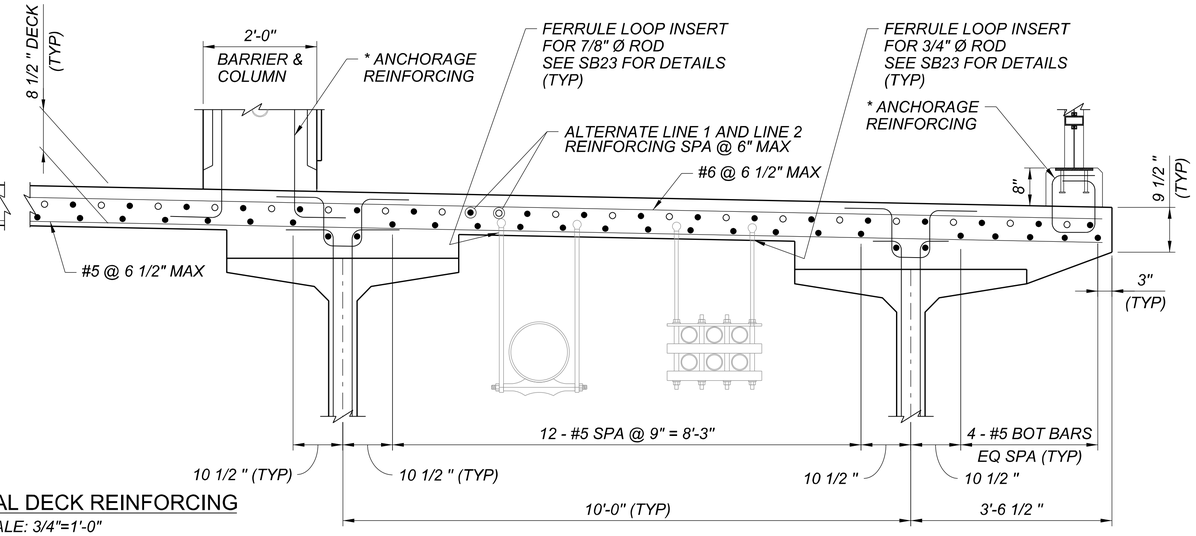

PARTIAL TYPICAL DECK REINFORCING

SCALE: 3/4"=1'-0"

LEGEND:

- • REINFORCING LINE 1
- ○ REINFORCING LINE 2

*SEE ANCHORAGE REINFORCING FOR VEHICULAR BARRIER, PED RAILING, AND RAISED MEDIAN ON SHEET SB32 TO SB34

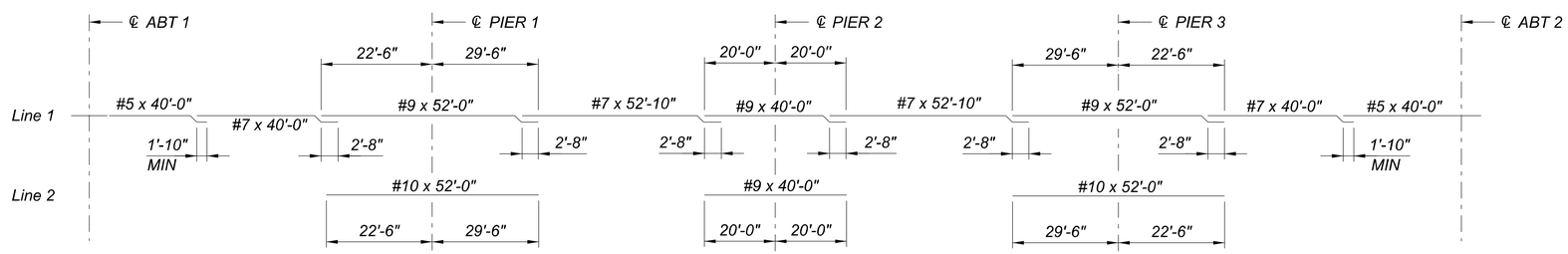

TOP DECK LONGITUDINAL REINFORCING LAYOUT

NOT TO SCALE

NOTES:

1. ALL CONTINUOUS HORIZONTAL REINFORCING STEEL IN THE DECK SLAB AND BARRIERS MAY BE SPLICED IF APPROVED BY THE ENGINEER OF RECORD WITH THE MINIMUM LAP LENGTHS SPECIFIED IN NOTE 1 AND SUBJECT TO THE FOLLOWING LIMITATIONS IN NOTES 2 THRU 3, UNLESS OTHERWISE NOTED.

   MINIMUM LAP LENGTH OF BAR SPLICED SHALL BE:

   #5 BARS.....1'-10" #9 BARS.....4'-0"
   #6 BARS.....2'-4" #10 BARS.....3'-9"
   #7 BARS.....2'-8"

2. BARS SHALL NOT BE SPLICED WITHIN THE REQUIRED LAP LENGTH OF THE ADJACENT BARS.

3. TRANSVERESE DECK BARS SHALL BE PLACED PERPENDICULAR TO THE GIRDER CENTERLINE.

4. FOR HAUNCHES GREATER THAN 2½" AT CENTER OF GIRDER, AS DETERMINED BY FIELD SURVEY AFTER GIRDER PLACEMENT, ADDITIONAL HAT BAR SHALL BE PLACED PER STIRRUP. DIMENSION k SHOULD BE BASED ON HAUNCH THICKNESS:

   NO BARS REQUIRED IF 2½" OR SMALLER
   HAUNCH = 2 1/2" k=8 1/2"
   HAUNCH = 3 1/2" k=9 1/2"
   HAUNCH = 4 1/2" k=10 1/2"

5. PLACE #5 CONT AT HAT BAR PLACEMENT.

Contact Arizona 811 Two Working Days Before You Dig
ARIZONA811 BLUE STAKE, INC.
Call 811 or Click Arizona811.com

NO.	REVISION	BY	DATE
3			
2			
1			

MARICOPA COUNTY

NORTHERN PARKWAY
103RD AVENUE TO 91ST AVENUE - PHASE 1
PROJECT NO. TT0372

	BY	DATE
DESIGNED	AO	04/2026
DRAWN	BR	04/2026
CHECKED	KLH	04/2026

Registered Professional Engineer (Civil) CERTIFICATE NO. 37968 KOOI-LIM HOE Date Signed 4/29/2026 ARIZONA, U.S.A.

TYLin

DECK SECTION & REINFORCING

SHEET SB22

TRACS NO.

c:\bmsi\tyli-pw\brandon.rudolph@tylin.com\d0573062\TT0372_SB_NewRiver_22xsr.dgn
Brandon Rudolph OpenRoads_Imperial 3:46:37 PM 4/29/2026 MCDOT_TYLIN_HALF_PRINT.tbl TYLI_GN_bwpdf Half.pltcfg

F.H.W.A. REGION	STATE	PROJECT NO.	SHEET NO.	TOTAL SHEETS	RECORD DRAWING
9	AZ	TT0372	167	224	

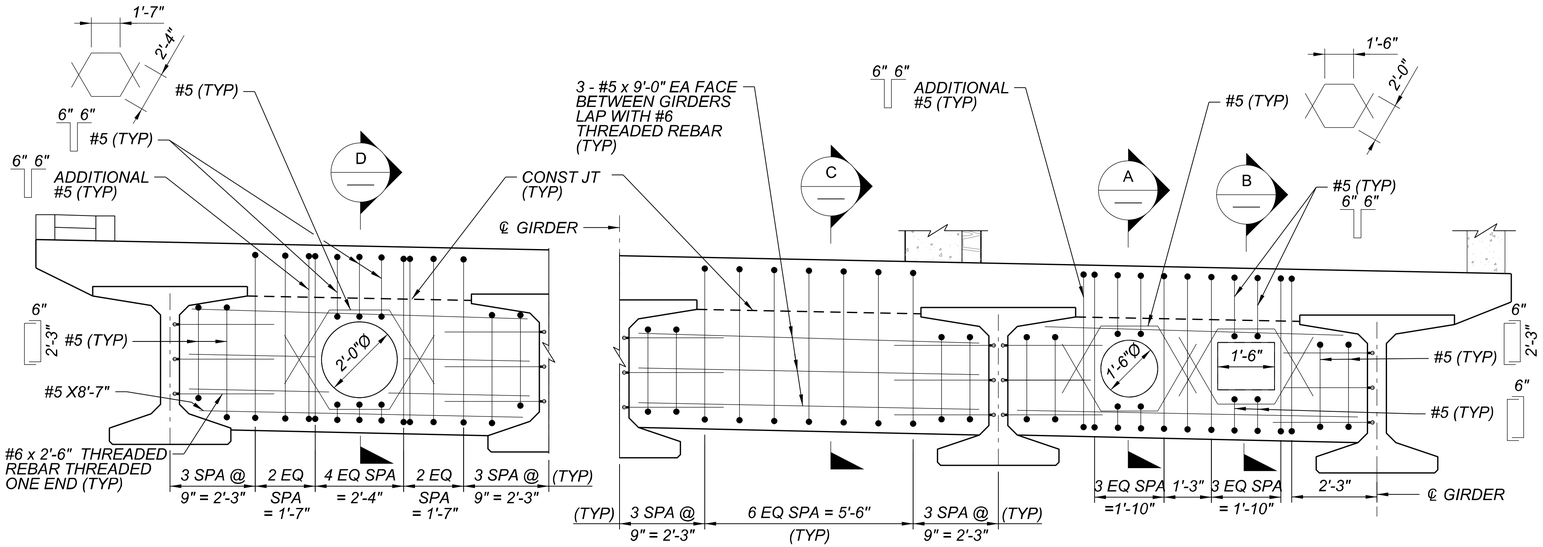

PARTIAL SECTION THRU INTERMEDIATE DIAPHRAGM

SCALE: 1/2"=1'-0"

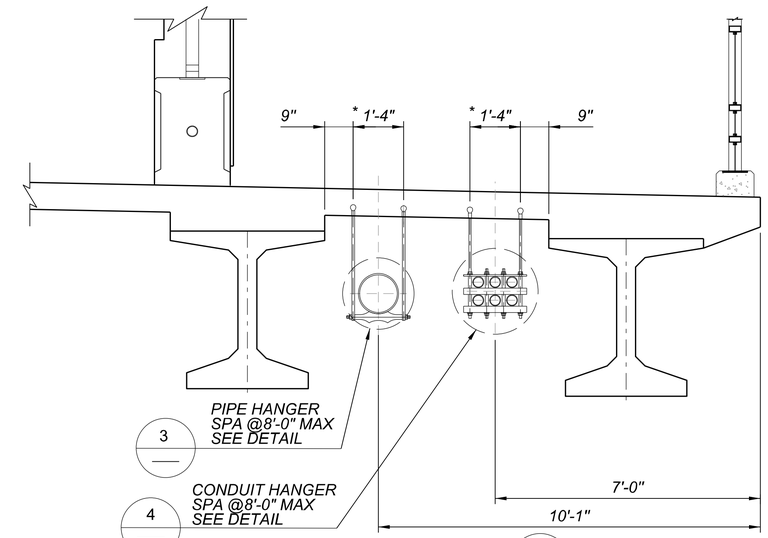

UTILITIES DETAIL 1 / SB03

SCALE: 1/2"=1'-0"

* CONTRACTOR SHALL VERIFY THE DIMENSION BASED ON THE SELECTED HANGER

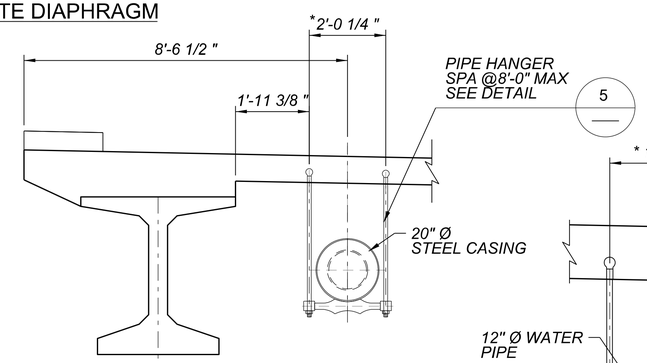

UTILITIES DETAIL 2 / SB03

SCALE: 1/2"=1'-0"

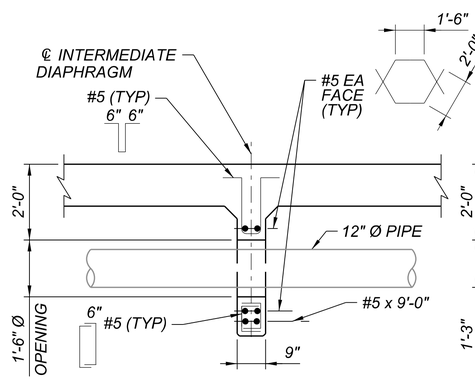

SECTION A

SCALE: 1/2"=1'-0"

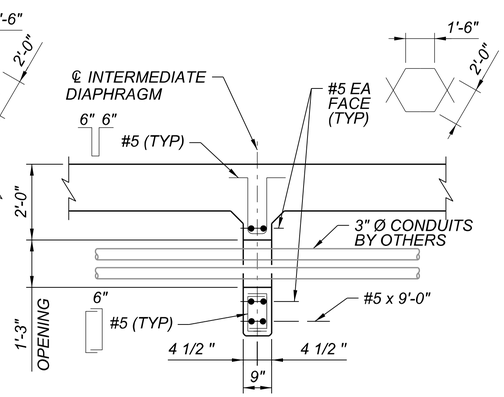

SECTION B

SCALE: 1/2"=1'-0"

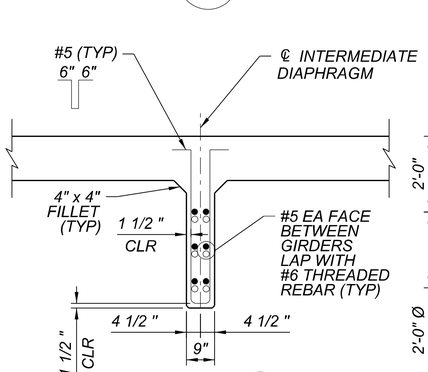

SECTION C

SCALE: 1/2"=1'-0"

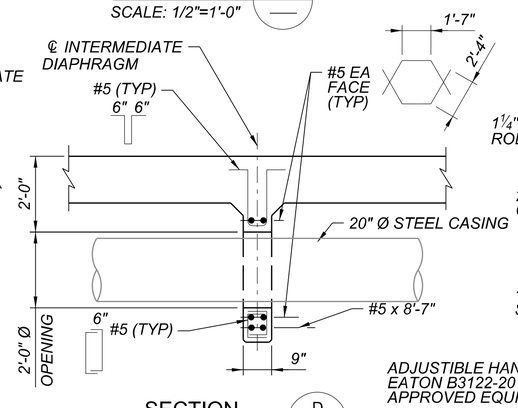

SECTION D

SCALE: 1/2"=1'-0"

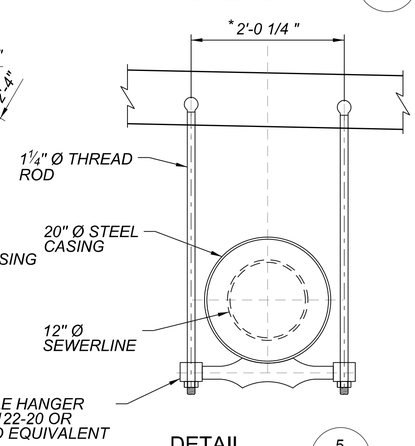

DETAIL 5

SCALE: 1"=1'-0"

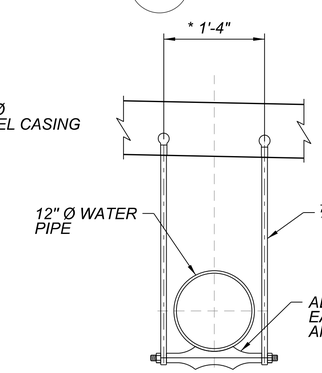

DETAIL 3

SCALE: 1"=1'-0"

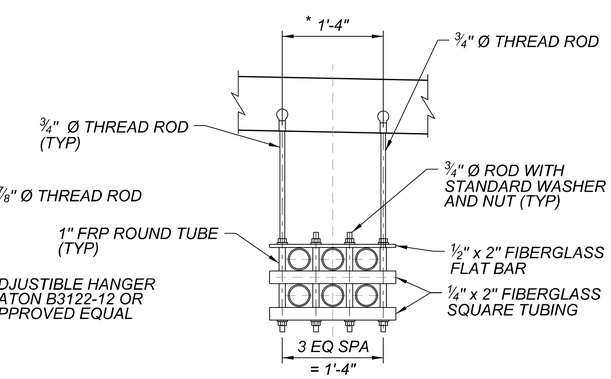

DETAIL 4

SCALE: 1"=1'-0"

Contact Arizona 811 Two Working Days Before You Dig
ARIZONA811 BLUE STAKE, INC.
Call 811 or Click Arizona811.com

NOTES:

1. THREADED INSERTS FOR HANGER ARE FERULE LOOP INSERTS FOR ¾" Ø ROD, ⅞" Ø ROD, AND 1¼" Ø ROD. INSERTS SHALL DEVELOP AN ALLOWABLE PULLOUT STRENGTH OF 2.0 KIPS FOR THE ¾" Ø AND ⅞" Ø RODS AND 3.0 KIPS FOR THE 1¼" Ø ROD. THREADED INSERTS ARE SUBJECT TO CHANGE PER SELECTED HANGER SYSTEM. ALTERNATIVE SELECTED HANGER SYSTEM SHALL BE SUBMITTED FOR ENGINEERING REVIEW.
2. ALL THE FERULE LOOP INSERT SHALL BE COVERED AND PROTECTED PRIOR TO INSTALLATION OF HANGER.
3. THREAD ROD SHALL CONFORM TO ASTM 1554. NUTS AND WASHERS SHALL CONFORM TO ASTM 1563. ALL COMPONENTS SHALL BE GALVANIZED.
4. FIBERGLASS COMPONENTS SHALL BE MANUFACTURED USING ISOPHTHALIC POLYESTER RESIN AND CONTAIN UV INHIBITORS. THE FIBERGLASS SHALL HAVE A MIN 30 KSI TENSILE, COMPRESSIVE, AND FLEXURAL STRENGTH. THE MIN MODULUS OF ELASTICITY SHALL BE 2,800 KSI.

NO.	REVISION	BY	DATE
3			
2			
1			

MARICOPA COUNTY

NORTHERN PARKWAY
103RD AVENUE TO 91ST AVENUE - PHASE 1
PROJECT NO. TT0372

	BY	DATE
DESIGNED	AO	04/2026
DRAWN	BR	04/2026
CHECKED	KLH	04/2026

Registered Professional Engineer (Civil) CERTIFICATE NO. 37868 KOOI-LIM HOE Date Signed 4/29/2026 ARIZONA, U.S.A.

TYLin

SUPERSTRUCTURE DETAILS

SHEET SB23

TRACS NO.

c:\bmstyli-pw\brandon.rudolph@tylin.com\d0573062\TT0372_SB_NewRiver_23sd.dgn
Brandon.Rudolph OpenRoads_Imperial 3:46:54 PM 4/29/2026 MCDOT_TYLIN_HALF_PRINT.tbl TYLI_GN_bwpdf Half.pltcfg

F.H.W.A. REGION	STATE	PROJECT NO.	SHEET NO.	TOTAL SHEETS	RECORD DRAWING
9	AZ	TT0372	168	224	

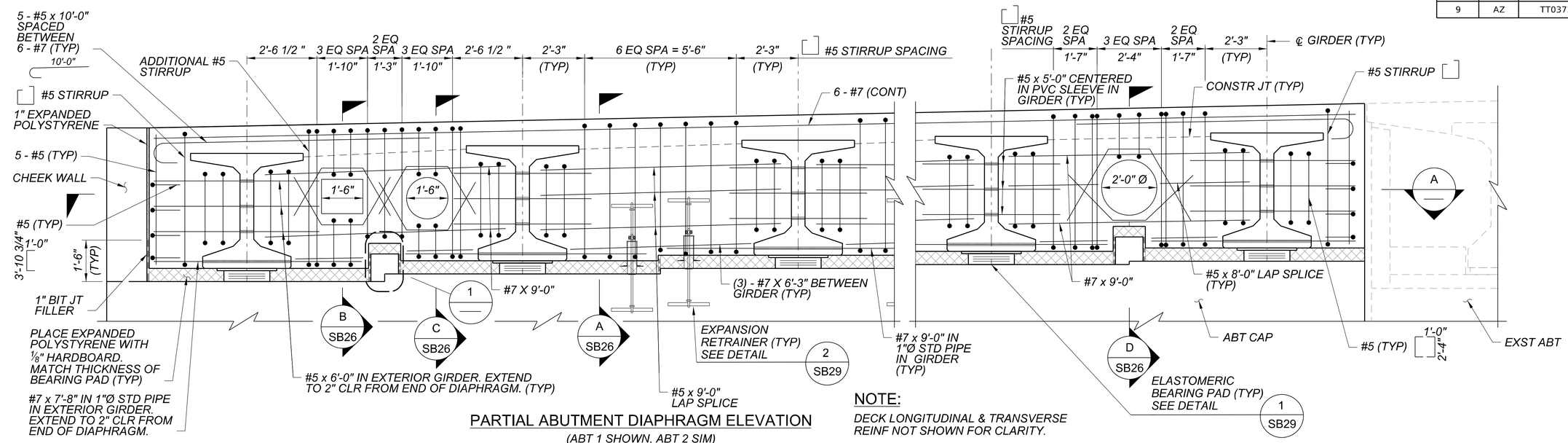

PARTIAL ABUTMENT DIAPHRAGM ELEVATION

(ABT 1 SHOWN, ABT 2 SIM)
SCALE: 1/2"=1'-0"

NOTE:

DECK LONGITUDINAL & TRANSVERSE REINF NOT SHOWN FOR CLARITY.

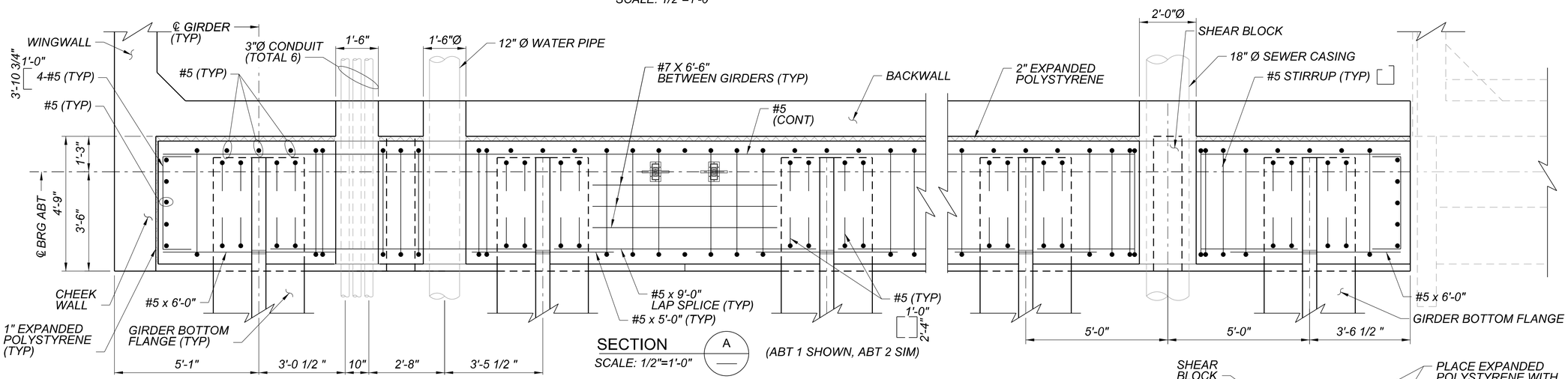

SECTION A

SCALE: 1/2"=1'-0"

(ABT 1 SHOWN, ABT 2 SIM)

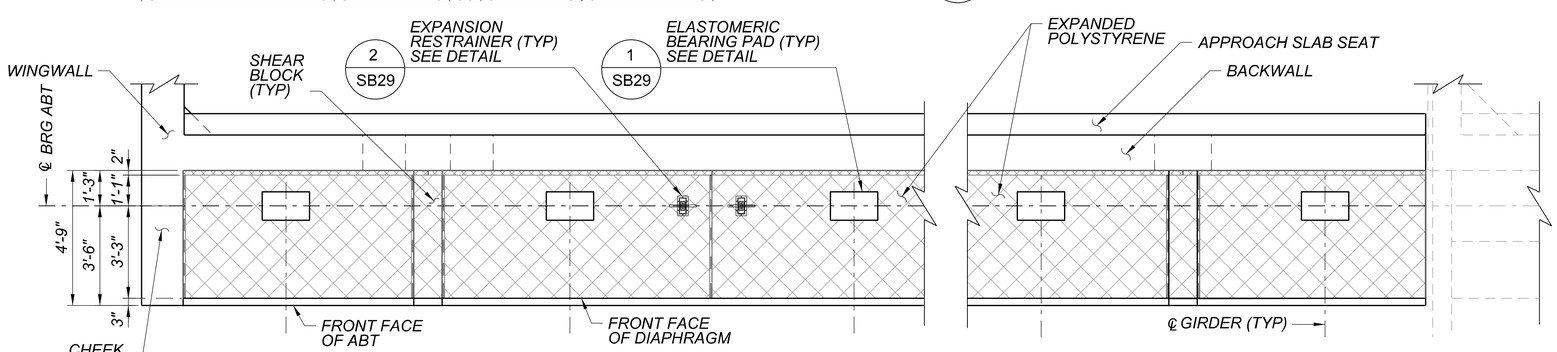

PARTIAL ABUTMENT DIAPHRAGM PLAN

(ABT 1 SHOWN, ABT 2 SIM)
SCALE: 3/8"=1'-0"

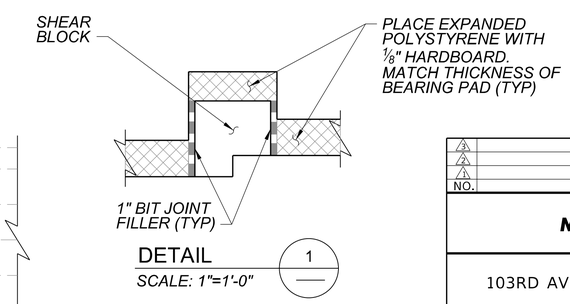

DETAIL 1

SCALE: 1"=1'-0"

Contact Arizona 811 Two Working Days Before You Dig
Call 811 or Click Arizona811.com

NO.	REVISION	BY	DATE
3			
2			
1			

MARICOPA COUNTY

NORTHERN PARKWAY
103RD AVENUE TO 91ST AVENUE - PHASE 1
PROJECT NO. TT0372

	BY	DATE
DESIGNED	AO	04/2026
DRAWN	BR	04/2026
CHECKED	KLH	04/2026

Registered Professional Engineer (Civil) CERTIFICATE NO. 37868 KOOT-LIM HOE Date Signed 4/29/2026 ARIZONA, U.S.A.

TYLin

ABUTMENT DIAPHRAGM DETAILS

SHEET SB24

TRACS NO.

c:\bmstyli-pw\brandon.rudolph@tylin.com\d0573062\TT0372_SB_NewRiver_24a11.dgn
Brandon Rudolph OpenRoads_Imperial 3:47:09 PM 4/29/2026 MCDOT_TYLIN_HALF_PRINT.tbl TYLI_GN_bwpdf Half.pltcfg

F.H.W.A. REGION	STATE	PROJECT NO.	SHEET NO.	TOTAL SHEETS	RECORD DRAWING
9	AZ	TT0372	169	224	

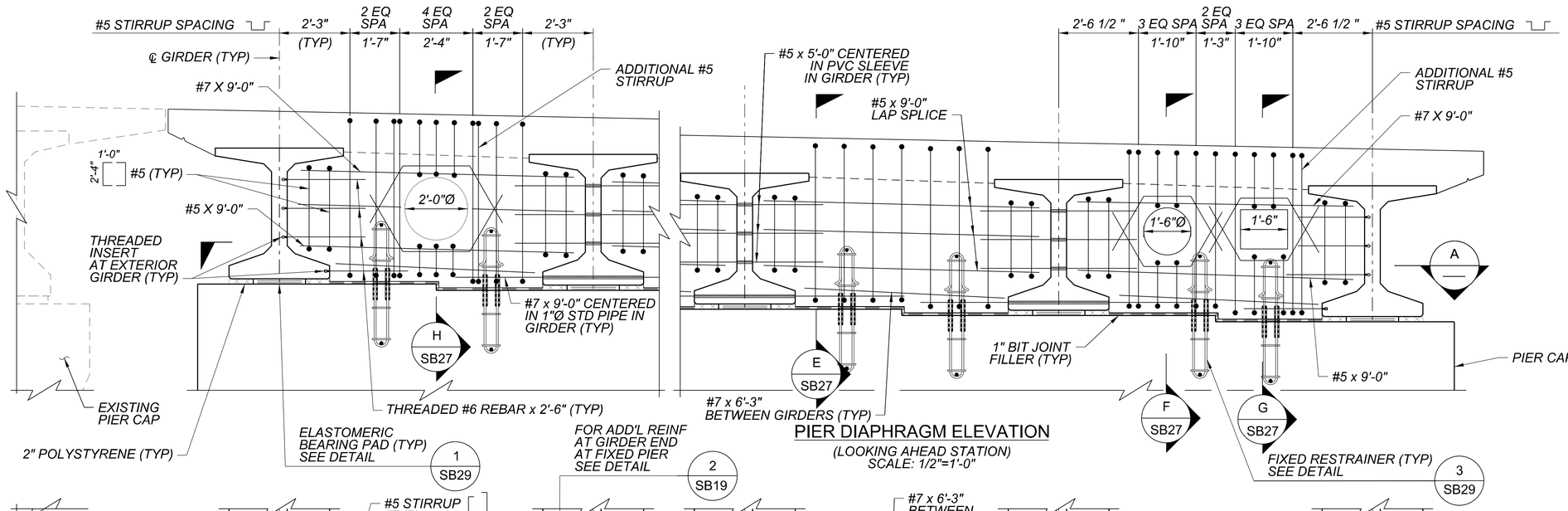

PIER DIAPHRAGM ELEVATION

(LOOKING AHEAD STATION)
SCALE: 1/2"=1'-0"

NOTE:

DECK REINFORCING NOT SHOWN FOR CLARITY.

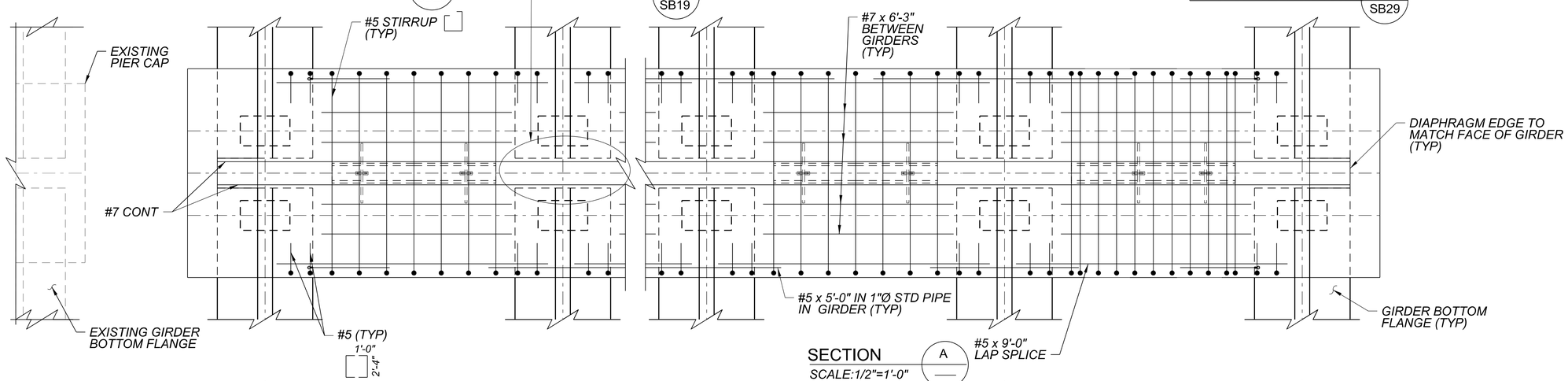

SECTION A

SCALE:1/2"=1'-0"

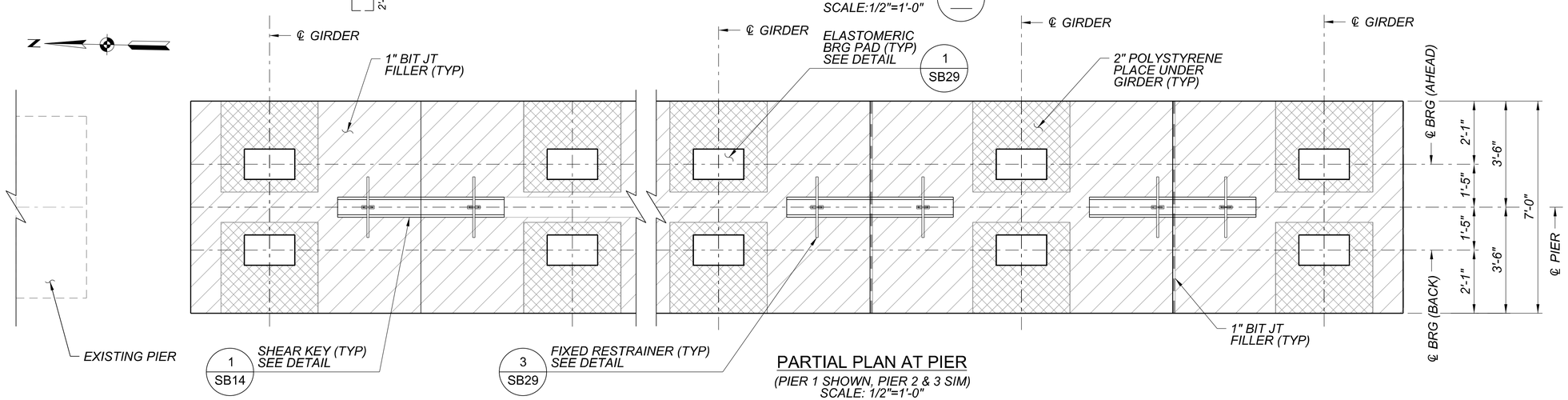

PARTIAL PLAN AT PIER

(PIER 1 SHOWN, PIER 2 & 3 SIM)
SCALE: 1/2"=1'-0"

Contact Arizona 811 Two Working Days Before You Dig
Call 811 or Click Arizona811.com

NO.	REVISION	BY	DATE
3			
2			
1			

MARICOPA COUNTY

NORTHERN PARKWAY
103RD AVENUE TO 91ST AVENUE - PHASE 1
PROJECT NO. TT0372

	BY	DATE
DESIGNED	AO	04/2026
DRAWN	BR	04/2026
CHECKED	KLH	04/2026

Registered Professional Engineer (Civil) CERTIFICATE NO. 37868 KOOT-LIM HOE Date Signed 4/29/2026 ARIZONA, U.S.A.

TYLin

PIER DIAPHRAGM DETAILS

SHEET SB25

TRACS NO.

c:\bmstyli-pw\brandon.rudolph@tylin.com\d0573062\TT0372_SB_NewRiver_25pf1.dgn Brandon Rudolph OpenRoads_Imperial 3:47:25 PM 4/29/2026 MCDOT_TYLIN_HALF_PRINT.tbl TYLI_GN_bwpdf Half.pltcfg

F.H.W.A. REGION	STATE	PROJECT NO.	SHEET NO.	TOTAL SHEETS	RECORD DRAWING
9	AZ	TT0372	170	224	

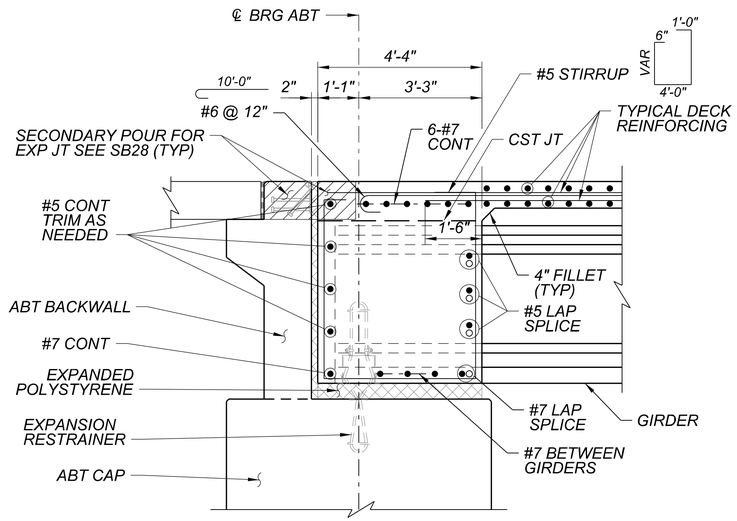

SECTION A / SB24
SCALE: 1/2"=1'-0"

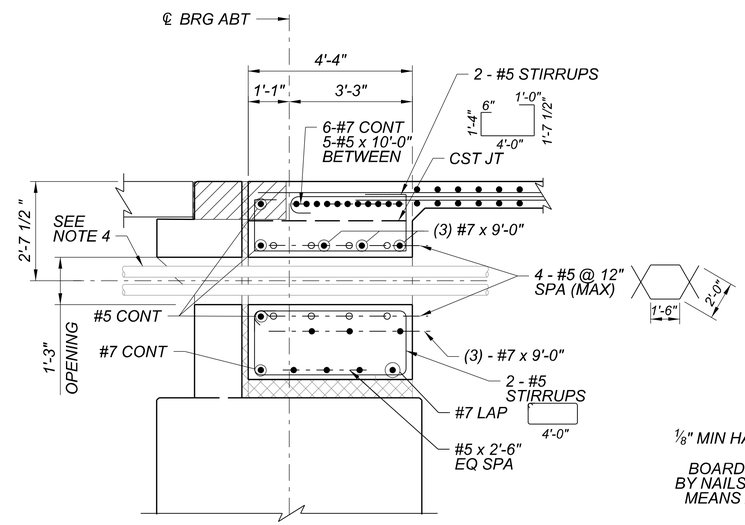

SECTION B / SB24
SCALE: 1/2"=1'-0"

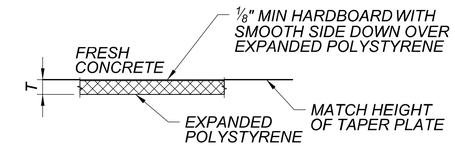

PROTECTION OF HORIZONTAL POLYSTYRENE
NOT TO SCALE

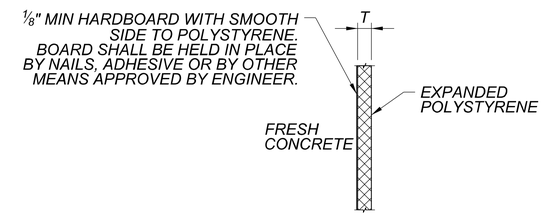

PROTECTION OF VERTICAL POLYSTYRENE
NOT TO SCALE

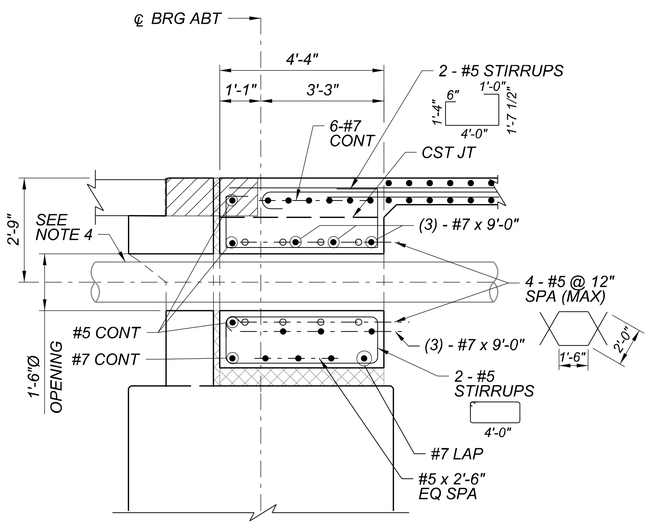

SECTION C / SB24
SCALE: 1/2"=1'-0"

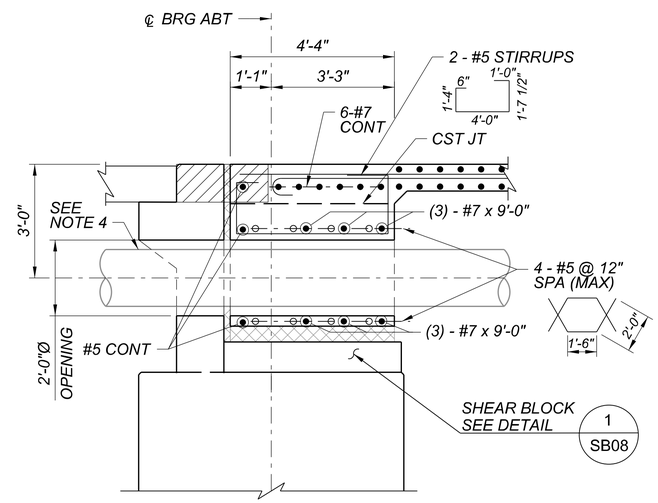

SECTION D / SB24
SCALE: 1/2"=1'-0"

NOTES:

1. HARDBOARD TO BE USED ON ANY POLYSTYRENE FACE AGAINST WHICH CONCRETE IS TO BE PLACED.
2. PETROLEUM PRODUCTS NOT ALLOWED FOR REMOVAL OF POLYSTYRENE.
3. TOTAL THICKNESS, 'T', AS SPECIFIED IN PLANS INCLUDES ⅛" HARDBOARD.
4. THE GAP BETWEEN THE OPENING AND THE PIPE/CONDUIT SHALL BE FILLED WITH NON-SHRINK GROUT TO PROTECT THE SOIL BEHIND THE BACKWALL.

Contact Arizona 811 Two Working Days Before You Dig
ARIZONA811 BLUE STAKE, INC.
Call 811 or Click Arizona811.com

NO.	REVISION	BY	DATE
3			
2			
1			

MARICOPA COUNTY

NORTHERN PARKWAY
103RD AVENUE TO 91ST AVENUE - PHASE 1
PROJECT NO. TT0372

	BY	DATE
DESIGNED	AO	04/2026
DRAWN	BR	04/2026
CHECKED	KLH	04/2026

Registered Professional Engineer (Civil) CERTIFICATE NO. 37068 KOOT-LIM HOE Date Signed 4/16/2026 ARIZONA, U.S.A.

TYLin

DIAPHRAGM SECTION DETAILS 1

SHEET SB26

TRACS NO.

c:\bmstyli-pw\brandon.rudolph@tylin.com\d0573062\TT0372_SB_NewRiver_26afpf1.dgn Brandon Rudolph OpenRoads_Imperial 3:47:41 PM 4/29/2026 MCDOT_TYLIN_HALF_PRINT.tbl TYLI_GN_bwpdf Half.pltcfg

F.H.W.A. REGION	STATE	PROJECT NO.	SHEET NO.	TOTAL SHEETS	RECORD DRAWING
9	AZ	TT0372	171	224	

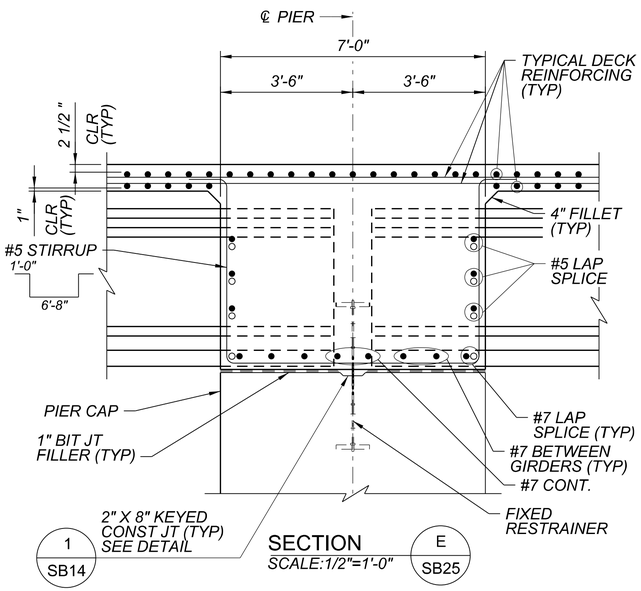

SECTION
SCALE:1/2"=1'-0"

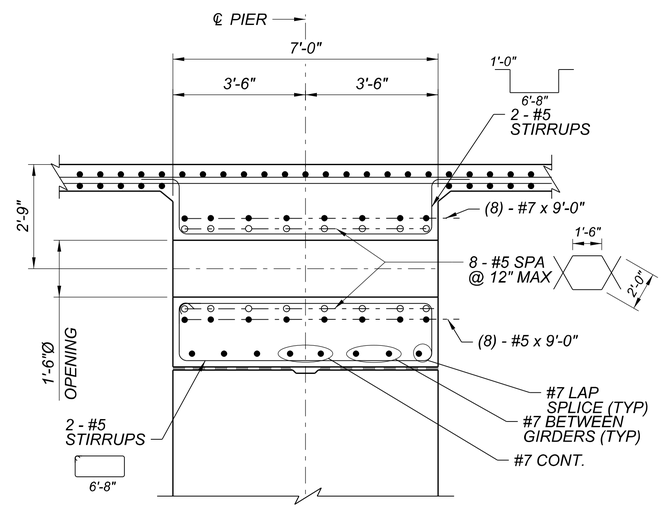

SECTION
SCALE: 1/2"=1'-0"
F
SB25

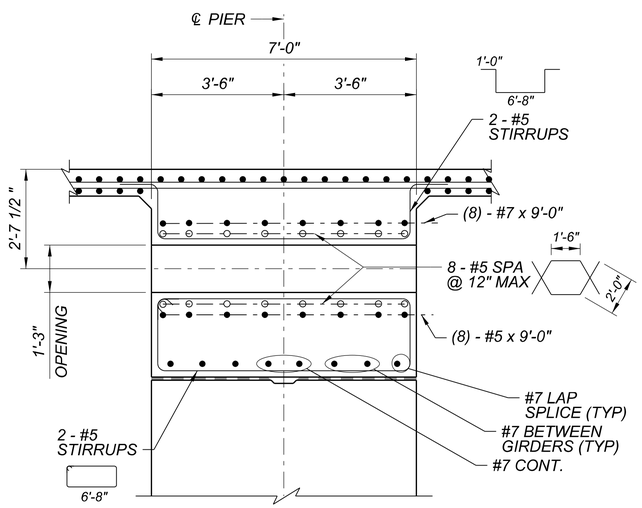

SECTION
SCALE: 1/2"=1'-0"
G
SB25

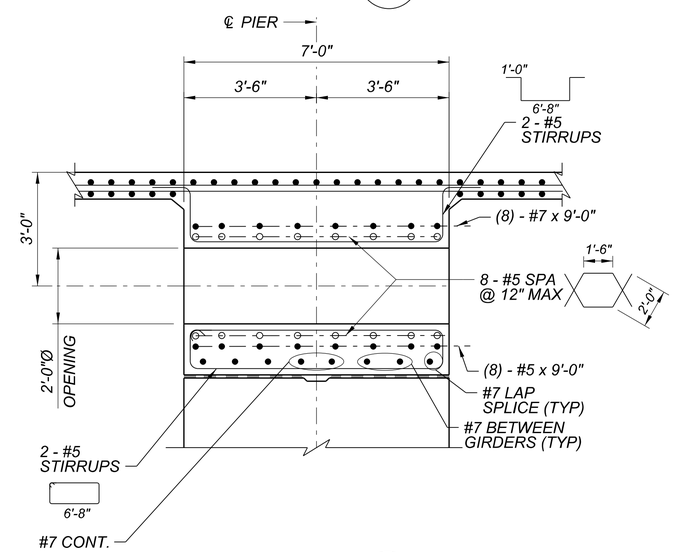

SECTION
SCALE: 1/2"=1'-0"
H
SB25

Contact Arizona 811 Two Working Days Before You Dig
ARIZONA811 BLUE STAKE, INC.
Call 811 or Click Arizona811.com

NO.	REVISION	BY	DATE
3			
2			
1			

MARICOPA COUNTY

NORTHERN PARKWAY
103RD AVENUE TO 91ST AVENUE - PHASE 1
PROJECT NO. TT0372

Registered Professional Engineer (Civil)
CERTIFICATE NO. 37868
K001-LIM
HOE
Date Signed 4/29/2026
ARIZONA, U.S.A.

	BY	DATE
DESIGNED	AO	04/2026
DRAWN	BR	04/2026
CHECKED	KLH	04/2026

TYLin

DIAPHRAGM SECTION DETAILS 2

SHEET SB27

TRACS NO.

c:\bmstlyli-pw\brandon.rudolph@tylin.com\d0573062\TT0372_SB_NewRiver_27afpl2.dgn Brandon Rudolph OpenRoads_Imperial 3:47:57 PM 4/29/2026 MCDOT_TYLIN_HALF_PRINT.tbl TYLI_GN_bwpdf Half.pltcfg

F.H.W.A. REGION	STATE	PROJECT NO.	SHEET NO.	TOTAL SHEETS	RECORD DRAWING
9	AZ	TT0372	172	224	

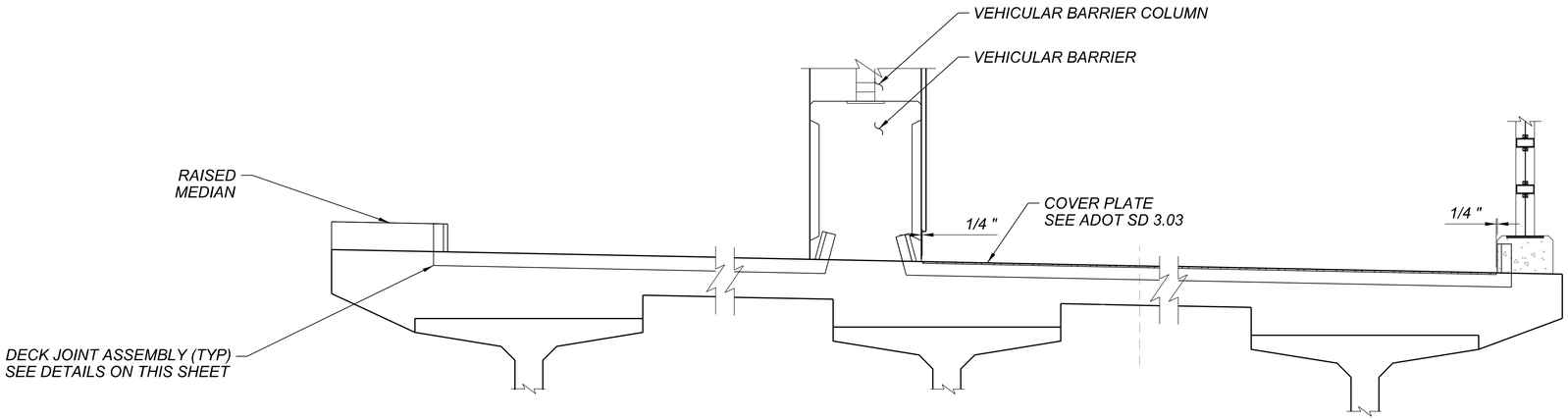

NEW DECK JOINT ELEVATION

SCALE: 3/4"=1'-0"

TEMPERATURE CORRECTION TABLE	
DEGREE F	"e" (INCH) ABT
105	1.581
95	1.721
85	1.860
75	2.000
65	2.140
55	2.279
45	2.419
35	2.559

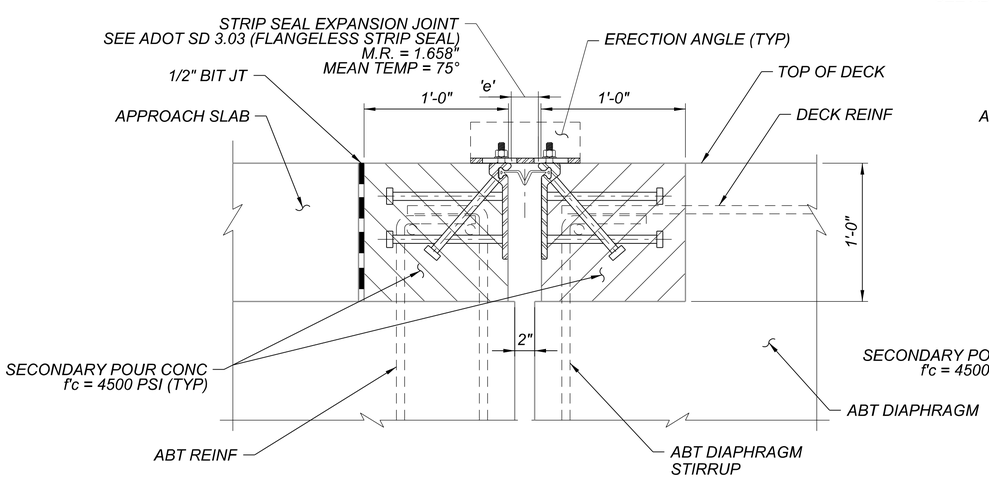

AT ROADWAY

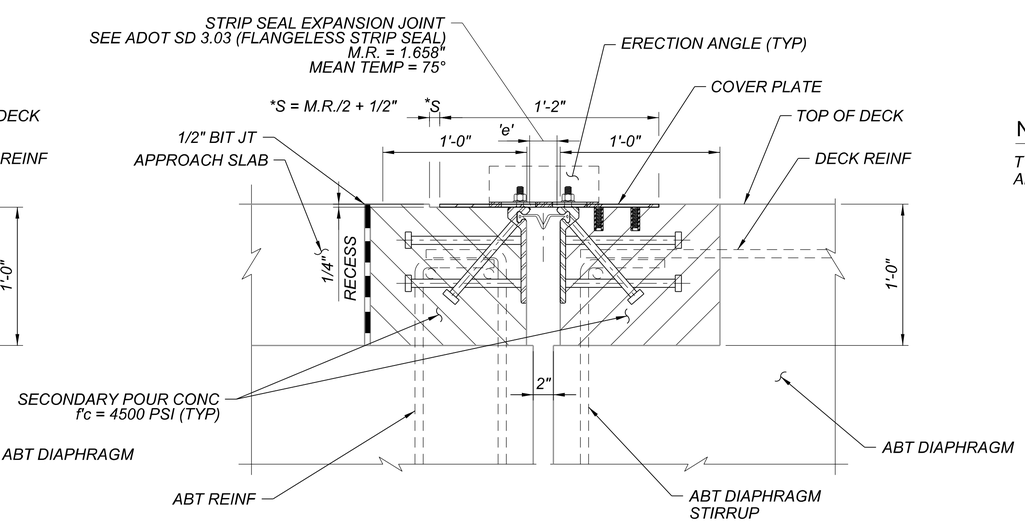

AT SIDEWALK

EXPANSION JOINT DETAIL

NOT TO SCALE

NOTE:

TYPICAL REINFORCING FROM DECK AND ABUTMENT ARE NOT SHOWN FOR CLARITY

Contact Arizona 811 Two Working Days Before You Dig
ARIZONA811 BLUE STAKE, INC.
Call 811 or Click Arizona811.com

NO.	REVISION	BY	DATE
3			
2			
1			

MARICOPA COUNTY

NORTHERN PARKWAY
103RD AVENUE TO 91ST AVENUE - PHASE 1
PROJECT NO. TT0372

	BY	DATE
DESIGNED	AO	04/2026
DRAWN	BR	04/2026
CHECKED	KLH	04/2026

Registered Professional Engineer (Civil) CERTIFICATE NO. 37968 KOOI-LIM HOE Date Signed 4/29/2026 ARIZONA, U.S.A.

TYLin

EXPANSION JOINT DETAILS

SHEET SB28

TRACS NO.

c:\bms\tyli-pw\brandon.rudolph@tylin.com\d0573062\TT0372_SB_NewRiver_28ej.dgn
Brandon Rudolph OpenRoads_Imperial 3:48:13 PM 4/29/2026 MCDOT_TYLIN_HALF_PRINT.tbl TYLI_GN_bwpdf Half.pltcfg

F.H.W.A. REGION	STATE	PROJECT NO.	SHEET NO.	TOTAL SHEETS	RECORD DRAWING
9	AZ	TT0372	173	224	

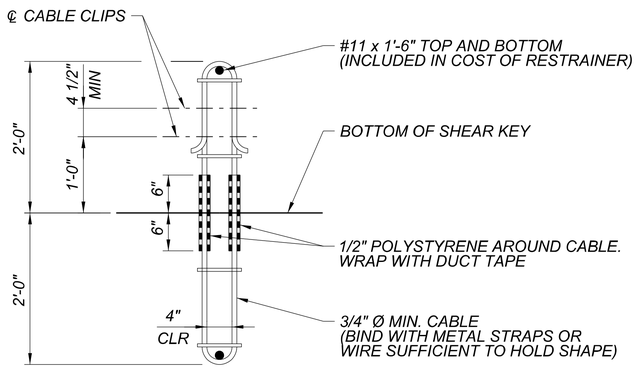

FIXED RESTRAINER DETAIL (3 / SB25)

NOT TO SCALE

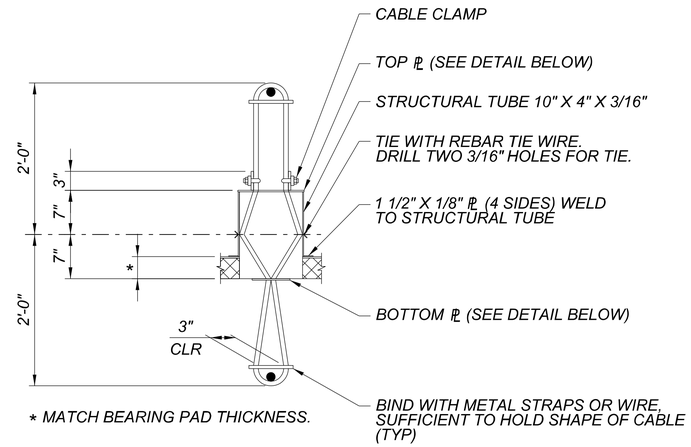

* MATCH BEARING PAD THICKNESS.

ELEVATION

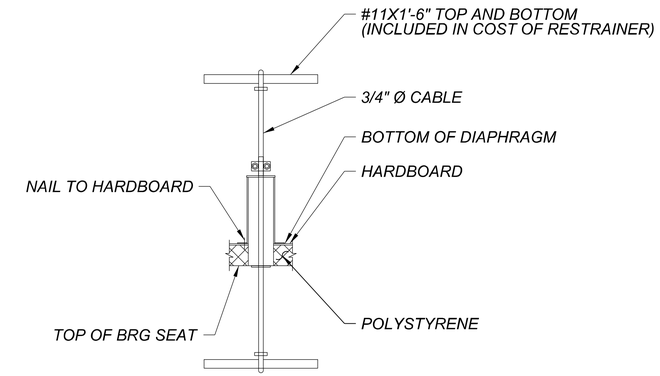

SECTION

RESTRAINER NOTES:

SEAL ALL OPENINGS IN STRUCTURAL TUBE TO PROHIBIT CONCRETE INTRUSION.

RESTRAINER CABLES SHALL BE 3/4" Ø PREFORMED 6X19 GALVANIZED WITH THE MINIMUM BREAKING STRENGTH OF 42 KIPS. ONE SAMPLE OF CABLE 3 FEET IN LENGTH SHALL BE FURNISHED TO THE ENGINEER FOR TESTING.

LOCATION	DIMENSION (INCH)			TYPE	LL+DL (KIPS)	NUMBER
	W	L	T			
ABT 1	24	16	5	EXP	250	7
PIER 1	24	12	2	FIXED	295	14
PIER 2	24	12	2	FIXED	295	14
PIER 3	24	12	2	FIXED	295	14
ABT 2	24	16	5	EXP	250	7

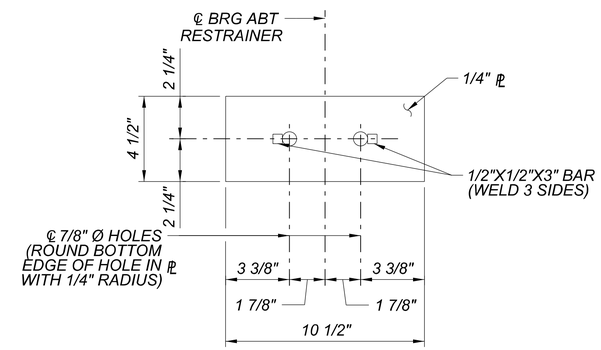

TOP PLATE

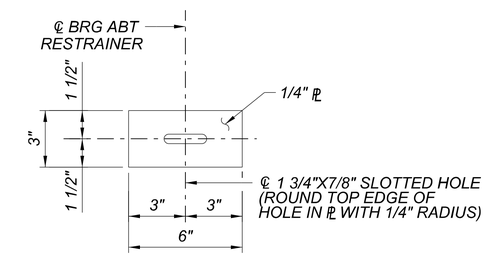

BOTTOM PLATE

EXPANSION RESTRAINER DETAIL (2 / SB24)

NOT TO SCALE

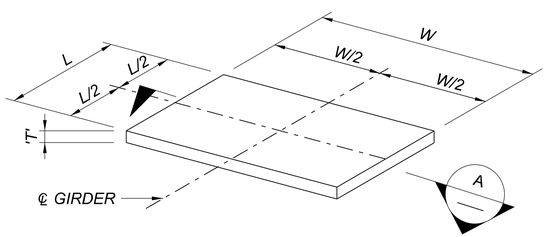

ELASTOMERIC BEARING PAD DETAIL (1 / SB08, 1 / SB09, 1 / SB14, 1 / SB19, 1 / SB24, 1 / SB25)

NOT TO SCALE

ELASTOMERIC BEARING PAD CRITERIA

DESIGN METHOD A
DESIGN LOAD (DL+LL) AS SHOWN IN TABLE
LOW TEMPERATURE ZONE (A)
ELASTOMERIC GRADE 0
SHEAR MODULUS = 130 PSI @ 73° F
MEAN DUROMETER HARDNESS = 55

ELASTOMERIC BEARING PAD SHALL BE 100% VIRGIN CHLOROPRENE AND CONFORM TO SECTION 1013 OF THE ADOT SPEC.

ELASTOMERIC BEARING PAD SHALL BE REINFORCED WITH STEEL REINFORCEMENT.

ELASTOMERIC BEARING PADS REQUIRED FOR ALL GIRDERS. SEE SCHEDULE FOR THICKNESS 'T', LENGTH 'L' AND WIDTH 'W'.

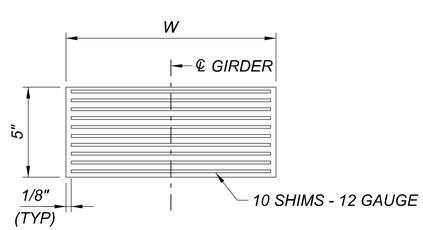

ABUTMENT BEARING PAD DETAIL

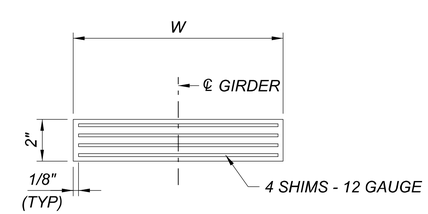

PIER BEARING PAD DETAIL

SECTION (A / —)

NOT TO SCALE

Contact Arizona 811 Two Working Days Before You Dig
Call 811 or Click Arizona811.com

NO.	REVISION	BY	DATE
3			
2			
1			

MARICOPA COUNTY

NORTHERN PARKWAY
103RD AVENUE TO 91ST AVENUE - PHASE 1
PROJECT NO. TT0372

	BY	DATE
DESIGNED	AO	04/2026
DRAWN	BR	04/2026
CHECKED	KLH	04/2026

Registered Professional Engineer (Civil) CERTIFICATE NO. 37868 KODI-LIM HOE Date Signed 4/29/2026 ARIZONA, U.S.A.

TYLin

BEARING PAD & RESTRAINER DETAILS

SHEET SB29

TRACS NO.

c:\bmstlyli-pw\brandon.rudolph@tylin.com\d0573062\TT0372_SB_NewRiver_29bd.dgn Brandon Rudolph OpenRoads_Imperial 3:48:28 PM 4/29/2026 MCDOT_TYLIN_HALF_PRINT.tbl TYLI_GN_bwpdf Half.pltcfg

F.H.W.A. REGION	STATE	PROJECT NO.	SHEET NO.	TOTAL SHEETS	RECORD DRAWING
9	AZ	TT0372	174	224	

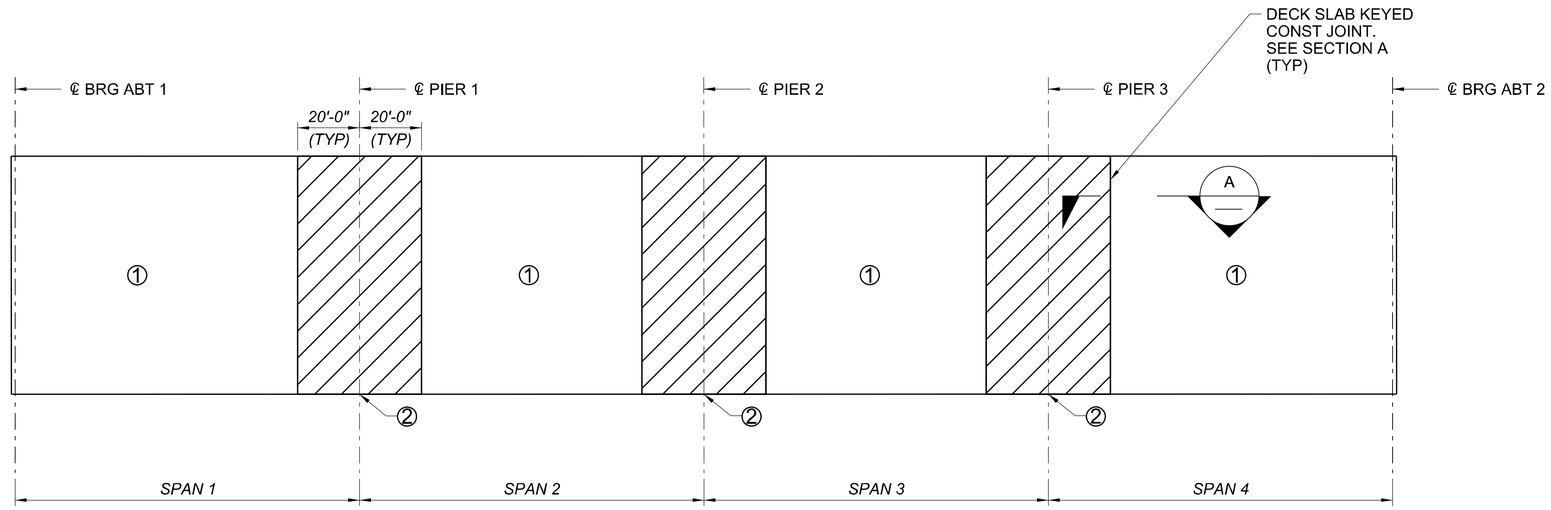

DECK PLACING SEQUENCE DETAIL

NO SCALE

DECK POUR SCHEDULE:

1. *NUMBER ① AND ② INDICATE SECTION AND PLACING SEQUENCE OF DECK CONCRETE. PLACE ② SECTION A MINIMUM OF 12 HOURS AFTER ADJACENT ① SECTIONS HAVE BEEN PLACED.*
2. *INTERMEDIATE DIAPHRAGMS AND ABUTMENT DIAPHRAGMS (f'c = 3500PSI) SHALL BE PLACED PRIOR TO THE DECK.*
3. *FIXED PIER DIAPHRAGMS SHALL BE PLACED CONCURRENT WITH THE DECK.*
4. *THE CONTRACTOR SHALL SUBMIT A DECK POUR SCHEDULE TO THE ENGINEER FOR APPROVAL PRIOR TO PLACING CONCRETE.*

CONSTRUCTION SEQUENCE:

THE CONSTRUCTION SEQUENCE SHOWN IS FOR THE CONTRACTORS INFORMATION. THE CONTRACTOR MAY PROPOSE AN ALTERNATIVE CONSTRUCTION SEQUENCE FOR APPROVAL BY THE ENGINEER.

1. *CONSTRUCT EMBANKMENT AT ABUTMENTS.*
2. *EXCAVATE AT ABUTMENTS AND PIERS AND CONSTRUCT DRILLED SHAFTS.*
3. *CONSTRUCT SUBSTRUCTURE.*
4. *ERECT I-GIRDERS AND PROVIDE TEMPORARY BRACING.*
5. *POUR ABUTMENT, AND INTERMEDIATE DIAPHRAGMS.*
6. *CAST CONCRETE SECTIONS 1 THRU 2 ACCORDING TO THE DECK POUR SCHEDULE SHOWN ON THIS DRAW.*
7. *BACKFILL BEHIND ABUTMENTS PRIOR TO DECK JOINT INSTALLATION,*
8. *CAST BARRIER.*

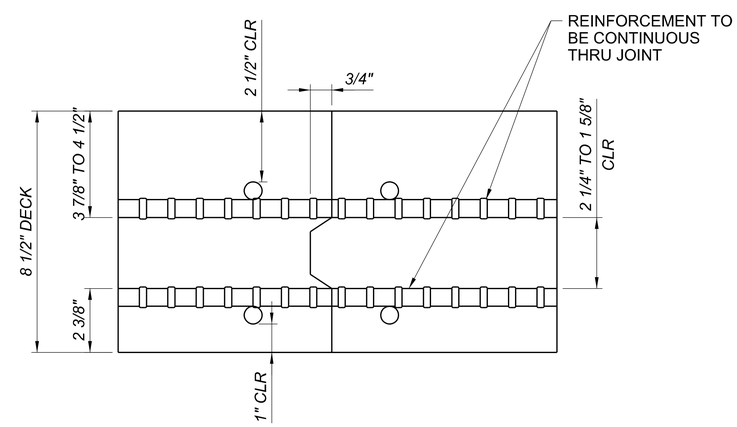

SECTION - DECK SLAB KEYED CONSTR. JOINT (A)

NO SCALE

Contact Arizona 811 Two Working Days Before You Dig
Call 811 or Click Arizona811.com

NO.	REVISION	BY	DATE
3			
2			
1			

MARICOPA COUNTY

NORTHERN PARKWAY
103RD AVENUE TO 91ST AVENUE - PHASE 1
PROJECT NO. TT0372

	BY	DATE
DESIGNED	AO	04/2026
DRAWN	BR	04/2026
CHECKED	KLH	04/2026

Registered Professional Engineer CERTIFICATE NO. 37060 KOOI-LIM HOE Date Signed 4/29/2026 ARIZONA, U.S.A.

TYLin

CONSTRUCTION SEQUENCE

SHEET SB30

TRACS NO.

c:\bmstyli-pw\brandon.rudolph@tylin.com\d0573062\TT0372_SB_NewRiver_30ph.dgn Brandon Rudolph OpenRoads_Imperial 3:48:42 PM 4/29/2026 MCDOT_TYLIN_HALF_PRINT.tbl TYLI_GN_bwpdf Half.pltcfg

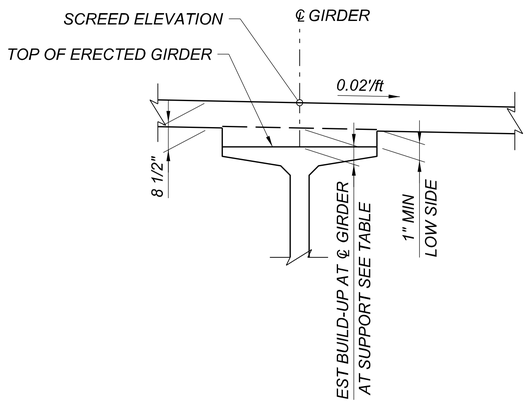

SCREED ELEVATION SECTION

NOT TO SCALE

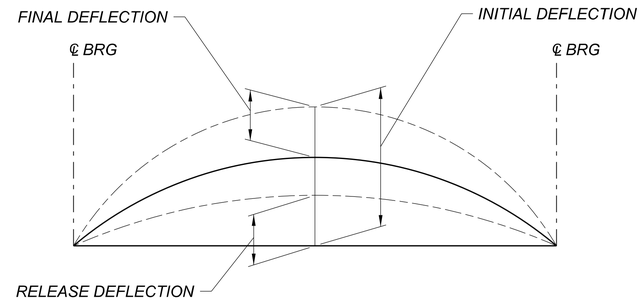

DEFLECTION DIAGRAM

NOT TO SCALE

DEFLECTION NOTES:

1. *RELEASE DEFLECTION EQUALS THE DEFLECTION THAT THE PRESTRESSED I-GIRDER UNDERGOES AT THE TIME OF STRAND RELEASE. THE RELEASE DEFLECTION INCLUDES THE DEAD LOAD OF THE I-GIRDER AND THE RELEASE PRESTRESSING FORCE (INCLUDING THE EFFECTS OF ELASTIC SHORTENING).*

2. *INITIAL DEFLECTION EQUALS THE DEFLECTION THE PRESTRESSED I-GIRDER UNDERGOES AT THE TIME OF ERECTION PRIOR TO THE DECK POURS. THE INITIAL DEFLECTION INCLUDES THE DEFLECTION DUE TO THE DEAD LOAD OF THE I-GIRDER, THE INITIAL PRESTRESSING, AND THE EFFECTS OF CREEP AND PRESTRESS LOSS UP TO THE TIME OF ERECTION (ASSUMED AT 60 DAYS AFTER RELEASE).*

3. *FINAL DEFLECTION EQUALS THE DEFLECTION DUE TO THE DEAD LOAD OF THE RAISED MEDIAN, BARRIERS, AND THE EFFECTS OF PRESTRESS LOSS AND LONG TERM CREEP.*

CAMBER DEFLECTION AT TENTH POINTS (FEET)												
SPAN	LOCATION	0.0 CL BRG	0.1	0.2	0.3	0.4	0.5	0.6	0.7	0.8	0.9	1.0 CL BRG
1	RELEASE (UP)	0.000	0.067	0.119	0.158	0.182	0.190	0.182	0.158	0.119	0.067	0.000
	INITIAL (UP)	0.000	0.120	0.215	0.285	0.328	0.343	0.328	0.285	0.215	0.120	0.000
	FINAL (DOWN)	0.000	0.050	0.094	0.128	0.148	0.154	0.143	0.119	0.085	0.043	0.000
2	RELEASE (UP)	0.000	0.065	0.117	0.155	0.179	0.187	0.179	0.155	0.117	0.065	0.000
	INITIAL (UP)	0.000	0.118	0.212	0.281	0.323	0.337	0.323	0.281	0.212	0.118	0.000
	FINAL (DOWN)	0.000	0.034	0.066	0.093	0.111	0.119	0.113	0.096	0.070	0.036	0.000
3	RELEASE (UP)	0.000	0.065	0.117	0.155	0.179	0.187	0.179	0.155	0.117	0.065	0.000
	INITIAL (UP)	0.000	0.118	0.212	0.281	0.323	0.337	0.323	0.281	0.212	0.118	0.000
	FINAL (DOWN)	0.000	0.036	0.070	0.096	0.113	0.119	0.111	0.093	0.066	0.034	0.000
4	RELEASE (UP)	0.000	0.067	0.119	0.158	0.182	0.190	0.182	0.158	0.119	0.067	0.000
	INITIAL (UP)	0.000	0.120	0.215	0.285	0.328	0.343	0.328	0.285	0.215	0.120	0.000
	FINAL (DOWN)	0.000	0.043	0.085	0.119	0.143	0.154	0.148	0.128	0.094	0.050	0.000

BUILD-UP TABLE		
GIRDERS	END	THEORETICAL BUILD-UP
SPAN 1	℄ BRG ABT 1	2.90
	℄ BRG PIER 1 (BACK)	3.50
SPAN 2	℄ BRG PIER 1 (AHEAD)	3.58
	℄ BRG PIER 2 (BACK)	3.50
SPAN 3	℄ BRG PIER 2 (AHEAD)	3.43
	℄ BRG PIER 3 (BACK)	3.65
SPAN 4	℄ BRG PIER 3 (AHEAD)	3.44
	℄ BRG ABT 2	2.90

Contact Arizona 811 Two Working Days Before You Dig
Call 811 or Click Arizona811.com

NO.	REVISION	BY	DATE
3			
2			
1			

MARICOPA COUNTY

NORTHERN PARKWAY
103RD AVENUE TO 91ST AVENUE - PHASE 1
PROJECT NO. TT0372

	BY	DATE
DESIGNED	AO	04/2026
DRAWN	BR	04/2026
CHECKED	KLH	04/2026

Registered Professional Engineer (Civil) CERTIFICATE NO. 37868 KOOT-LIM HOE Date Signed 4/29/2026 ARIZONA, U.S.A.

TYLin

CAMBER DETAILS

SHEET SB31

TRACS NO.

c:\bms\tyli-pw\brandon.rudolph@tylin.com\d0573062\TT0372_SB_NewRiver_31cd.dgn Brandon Rudolph OpenRoads_Imperial 3:48:55 PM 4/29/2026 MCDOT_TYLIN_HALF_PRINT.tbl TYLI_GN_bwpdf Half.pltcfg

F.H.W.A. REGION	STATE	PROJECT NO.	SHEET NO.	TOTAL SHEETS	RECORD DRAWING
9	AZ	TT0372	176	224	

BRIDGE SCREED ELEVATIONS												
	LOCATION	CL BRG	0.1 PT	0.2 PT	0.3 PT	0.4 PT	0.5 PT	0.6 PT	0.7 PT	0.8 PT	0.9 PT	CL BRG
SPAN 1	LEFT EDGE OF DECK	1085.85	1085.96	1086.06	1086.15	1086.21	1086.26	1086.29	1086.31	1086.30	1086.29	1086.27
	A	1085.78	1085.89	1085.99	1086.07	1086.14	1086.19	1086.22	1086.24	1086.23	1086.22	1086.20
	B	1085.58	1085.69	1085.79	1085.87	1085.94	1085.99	1086.02	1086.04	1086.03	1086.02	1086.00
	C	1085.38	1085.49	1085.59	1085.67	1085.74	1085.79	1085.82	1085.84	1085.83	1085.82	1085.80
	D	1085.18	1085.29	1085.39	1085.47	1085.54	1085.59	1085.62	1085.64	1085.63	1085.62	1085.60
	E	1084.98	1085.09	1085.19	1085.27	1085.34	1085.39	1085.42	1085.44	1085.43	1085.42	1085.40
	F	1084.78	1084.89	1084.99	1085.07	1085.14	1085.19	1085.22	1085.24	1085.23	1085.22	1085.20
	G	1084.58	1084.69	1084.79	1084.87	1084.94	1084.99	1085.02	1085.04	1085.03	1085.02	1085.00
	RIGHT EDGE OF DECK	1084.51	1084.62	1084.72	1084.80	1084.87	1084.92	1084.95	1084.96	1084.96	1084.95	1084.93
SPAN 2	LEFT EDGE OF DECK	1086.28	1086.33	1086.38	1086.42	1086.44	1086.45	1086.45	1086.42	1086.39	1086.34	1086.29
	A	1086.21	1086.26	1086.31	1086.35	1086.37	1086.38	1086.38	1086.35	1086.32	1086.27	1086.22
	B	1086.01	1086.06	1086.11	1086.15	1086.17	1086.18	1086.18	1086.15	1086.12	1086.07	1086.02
	C	1085.81	1085.86	1085.91	1085.95	1085.97	1085.98	1085.98	1085.95	1085.92	1085.87	1085.82
	D	1085.61	1085.66	1085.71	1085.75	1085.77	1085.78	1085.78	1085.75	1085.72	1085.67	1085.62
	E	1085.41	1085.46	1085.51	1085.55	1085.57	1085.58	1085.58	1085.55	1085.52	1085.47	1085.42
	F	1085.21	1085.26	1085.31	1085.35	1085.37	1085.38	1085.38	1085.35	1085.32	1085.27	1085.22
	G	1085.01	1085.06	1085.11	1085.15	1085.17	1085.18	1085.18	1085.15	1085.12	1085.07	1085.02
	RIGHT EDGE OF DECK	1084.94	1084.99	1085.04	1085.08	1085.10	1085.11	1085.10	1085.08	1085.05	1085.00	1084.95
SPAN 3	LEFT EDGE OF DECK	1086.28	1086.30	1086.31	1086.30	1086.29	1086.26	1086.21	1086.14	1086.07	1085.98	1085.89
	A	1086.21	1086.23	1086.24	1086.23	1086.22	1086.19	1086.14	1086.07	1086.00	1085.91	1085.82
	B	1086.01	1086.03	1086.04	1086.03	1086.02	1085.99	1085.94	1085.87	1085.80	1085.71	1085.62
	C	1085.81	1085.83	1085.84	1085.83	1085.82	1085.79	1085.74	1085.67	1085.60	1085.51	1085.42
	D	1085.61	1085.63	1085.64	1085.63	1085.62	1085.59	1085.54	1085.47	1085.40	1085.31	1085.22
	E	1085.41	1085.43	1085.44	1085.43	1085.42	1085.39	1085.34	1085.27	1085.20	1085.11	1085.02
	F	1085.21	1085.23	1085.24	1085.23	1085.22	1085.19	1085.14	1085.07	1085.00	1084.91	1084.82
	G	1085.01	1085.03	1085.04	1085.03	1085.02	1084.99	1084.94	1084.87	1084.80	1084.71	1084.62
	RIGHT EDGE OF DECK	1084.94	1084.96	1084.97	1084.96	1084.95	1084.91	1084.87	1084.80	1084.73	1084.64	1084.55
SPAN 4	LEFT EDGE OF DECK	1085.87	1085.85	1085.83	1085.79	1085.74	1085.67	1085.58	1085.48	1085.35	1085.21	1085.06
	A	1085.80	1085.78	1085.76	1085.72	1085.67	1085.60	1085.51	1085.41	1085.28	1085.14	1084.99
	B	1085.60	1085.58	1085.56	1085.52	1085.47	1085.40	1085.31	1085.21	1085.08	1084.94	1084.79
	C	1085.40	1085.38	1085.36	1085.32	1085.27	1085.20	1085.11	1085.01	1084.88	1084.74	1084.59
	D	1085.20	1085.18	1085.16	1085.12	1085.07	1085.00	1084.91	1084.81	1084.68	1084.54	1084.39
	E	1085.00	1084.98	1084.96	1084.92	1084.87	1084.80	1084.71	1084.61	1084.48	1084.34	1084.19
	F	1084.80	1084.78	1084.76	1084.72	1084.67	1084.60	1084.51	1084.41	1084.28	1084.14	1083.99
	G	1084.60	1084.58	1084.56	1084.52	1084.47	1084.40	1084.31	1084.21	1084.08	1083.94	1083.79
	RIGHT EDGE OF DECK	1084.53	1084.51	1084.49	1084.45	1084.40	1084.33	1084.24	1084.13	1084.01	1083.87	1083.72

TOP OF DECK ELEVATIONS ALONG EXST FACE OF CURB											
LOCATION	CL BRG	0.1 PT	0.2 PT	0.3 PT	0.4 PT	0.5 PT	0.6 PT	0.7 PT	0.8 PT	0.9 PT	CL BRG
SPAN 1	1085.89	1085.90	1085.97	1086.01	1086.07	1086.11	1086.10	1086.16	1086.21	1086.22	1086.24
SPAN 2	1086.25	1086.28	1086.30	1086.32	1086.32	1086.34	1086.36	1086.34	1086.34	1086.33	1086.31
SPAN 3	1086.30	1086.25	1086.21	1086.17	1086.14	1086.13	1086.09	1086.06	1086.04	1085.96	1085.91
SPAN 4	1085.89	1085.83	1085.77	1085.70	1085.64	1085.53	1085.45	1085.37	1085.27	1085.21	1085.10

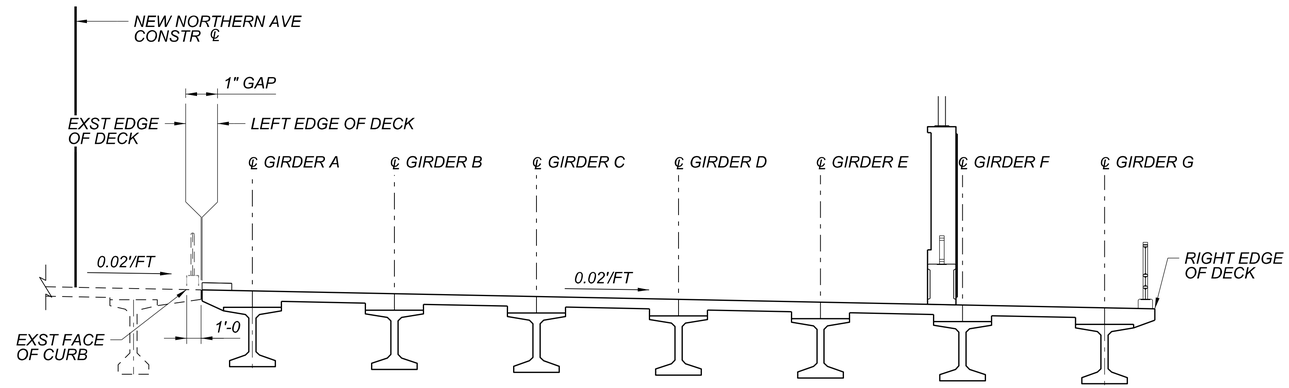

TYPICAL SECTION

NOT TO SCALE

SCREED ELEVATION NOTES:

1. THE TOP DECK ELEVATIONS ALONG EXST FACE OF CURB ARE DEVELOPED BASED ON SURVEY DATA. CONTRACTOR SHALL VERIFY THE ELEVATIONS PRIOR TO COMMENCING.
2. THE SCREED ELEVATIONS INCLUDE AN ALLOWANCE FOR DEFLECTION DUE TO THE FINAL DEFLECTION.
3. THE SCREED ELEVATIONS AND THEORETICAL BUILD-UP INCLUDE ADJUSTMENTS TO FINISH GRADE ELEVATIONS FOR THE EFFECTS OF INITIAL DEAD LOAD DEFLECTIONS BUT DO NOT INCLUDE ADJUSTMENTS FOR THE EFFECTS OF THERMAL GRADIENT BOWING DUE TO SOLAR HEATING OF THE TOP FLANGE, ADJUSTMENTS FOR SETTLEMENT, OR DEVIATIONS FROM THEORETICAL 60-DAY GIRDER CAMBER.
4. SCREED ELEVATION DATA SHALL BE USED IN SETTING SCREEDS. ADJUSTMENTS TO THE SCREED ELEVATIONS, IF NECESSARY, WILL BE DETERMINED BY THE ENGINEER AFTER REVIEWING THE TOP OF ERECTED GIRDER ELEVATIONS. DO NOT USE FINISH GRADE ELEVATIONS FOR SETTING SCREEDS.
5. GIRDER FLANGE ENCROACHMENT INTO THE DECK SHALL NOT BE ALLOWED.
6. THEORETICAL BUILD-UP, CAMBER, AND DEFLECTIONS USED FOR BEARING SEAT ELEVATION CALCULATIONS ARE BASED ON CASTING OF THE DECK SLAB 60 DAYS AFTER GIRDER CASTING.

Contact Arizona 811 Two Working Days Before You Dig
ARIZONA811 BLUE STAKE, INC.
Call 811 or Click Arizona811.com

NO.	REVISION	BY	DATE
3			
2			
1			

MARICOPA COUNTY

NORTHERN PARKWAY
103RD AVENUE TO 91ST AVENUE - PHASE 1
PROJECT NO. TT0372

	BY	DATE
DESIGNED	AO	04/2026
DRAWN	BR	04/2026
CHECKED	KLH	04/2026

Registered Professional Engineer (CIVIL) CERTIFICATE NO. 37060 KOOI-LIM HOE Date Signed 4/29/2026 ARIZONA, U.S.A.

TYLin

SCREED ELEVATIONS

SHEET SB32

TRACS NO.

c:\bmstyli-pw\brandon.rudolph@tylin.com\d0573062\TT0372_SB_NewRiver_32se.dgn Brandon Rudolph OpenRoads_Imperial 3:49:10 PM 4/29/2026 MCDOT_TYLIN_HALF_PRINT.tbl TYLI_GN_bwpdf Half.pltcfg

F.H.W.A. REGION	STATE	PROJECT NO.	SHEET NO.	TOTAL SHEETS	RECORD DRAWING
9	AZ	TT0372	177	224	

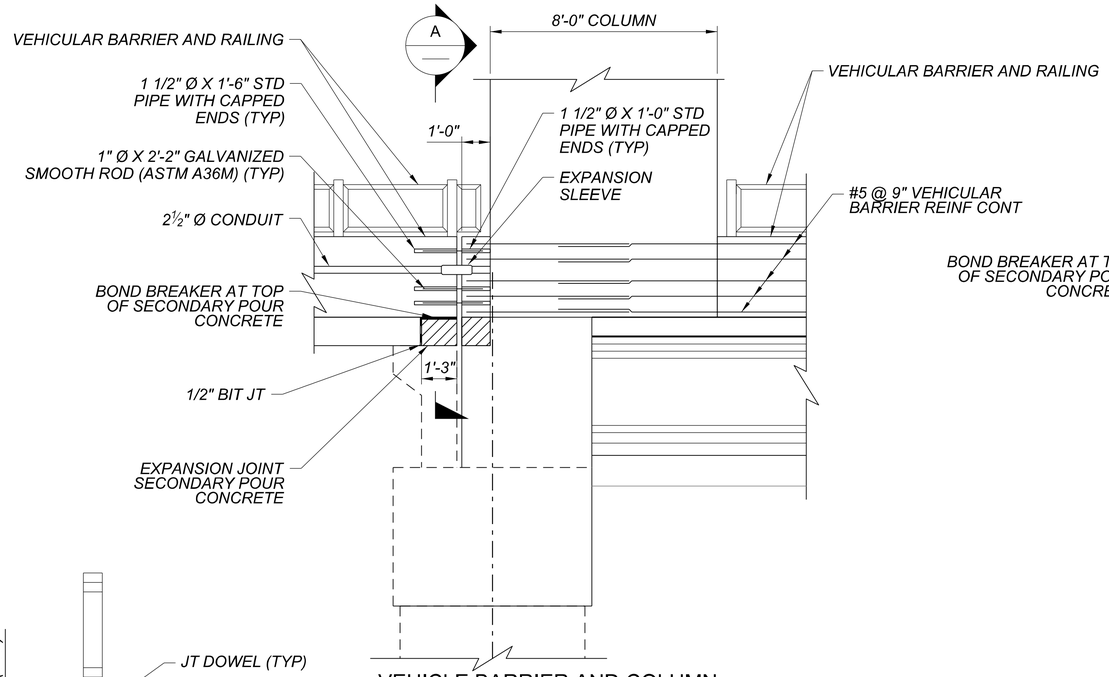

VEHICLE BARRIER AND COLUMN AT EXPANSION JOINT

SCALE: 3/8"=1'-0"

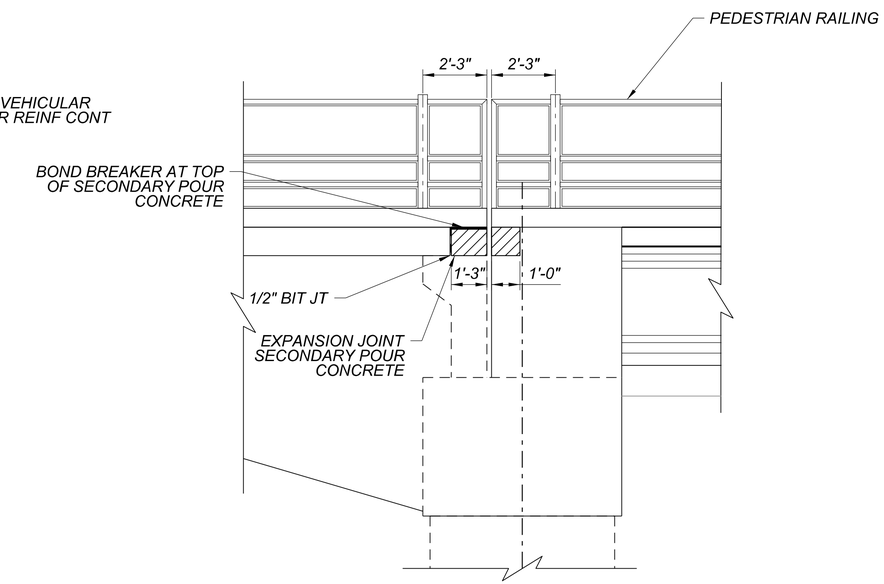

PEDESTRIAN RAIL AT EXPANSION JOINT

SCALE: 3/8"=1'-0"

NOTES:

FOR VEHICULAR BARRIER, COLUMN, AND PEDESTRIAN RAILING, SEE AESTHETIC PLANS (BR301-BR308).

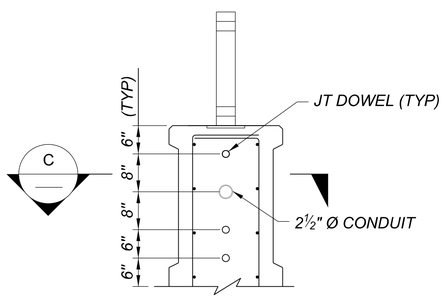

SECTION A

NOT TO SCALE

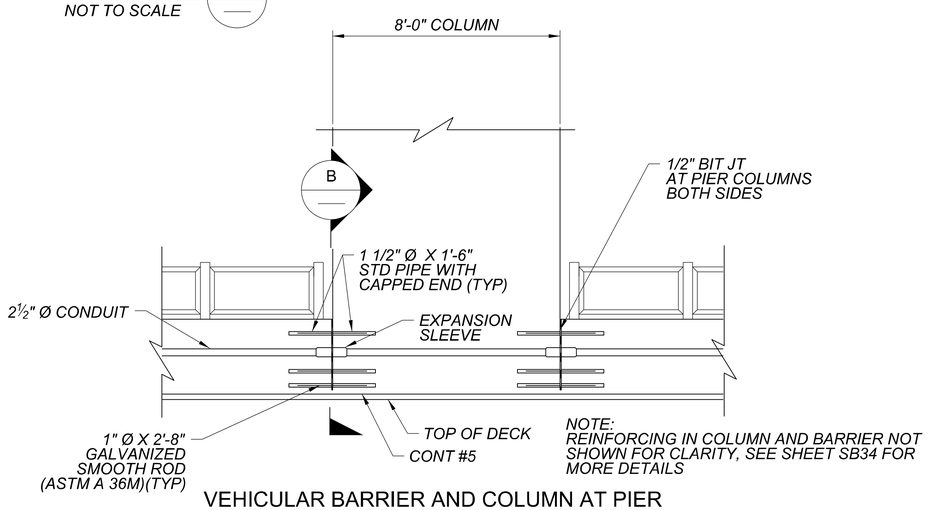

NOTE:
REINFORCING IN COLUMN AND BARRIER NOT SHOWN FOR CLARITY, SEE SHEET SB34 FOR MORE DETAILS

VEHICULAR BARRIER AND COLUMN AT PIER

SCALE: 3/8"=1'-0"

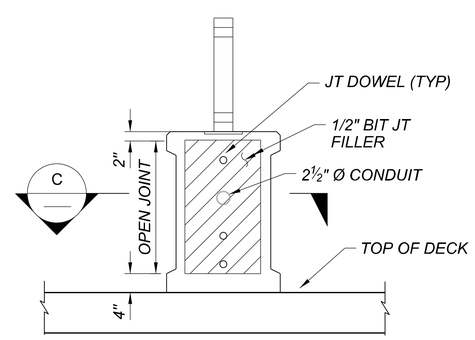

SECTION B

NOT TO SCALE

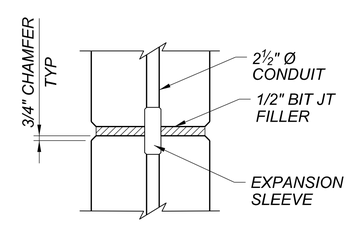

SECTION C

NOT TO SCALE

Contact Arizona 811 Two Working Days Before You Dig
ARIZONA811 BLUE STAKE, INC.
Call 811 or Click Arizona811.com

NO.	REVISION	BY	DATE
3			
2			
1			

MARICOPA COUNTY

NORTHERN PARKWAY
103RD AVENUE TO 91ST AVENUE - PHASE 1
PROJECT NO. TT0372

	BY	DATE
DESIGNED	AO	04/2026
DRAWN	BR	04/2026
CHECKED	KLH	04/2026

Registered Professional Engineer (Civil) CERTIFICATE NO. 37060 KOOI-LIM HOE Date Signed 5/4/2026 ARIZONA, U.S.A.

TYLin

AESTHETIC RAIL DETAILS 1

SHEET SB33

TRACS NO.

c:\bmstyli-pw\brandon.rudolph@tylin.com\d0573062\TT0372_SB_NewRiver_33ard1.dgn
Brandon Rudolph OpenRoads_Imperial 11:41:15 AM 5/4/2026 MCDOT_TYLIN_HALF_PRINT.tbl TYLI_GN_bwpdf Half.pltcfg

F.H.W.A. REGION	STATE	PROJECT NO.	SHEET NO.	TOTAL SHEETS	RECORD DRAWING
9	AZ	TT0372	178	224	

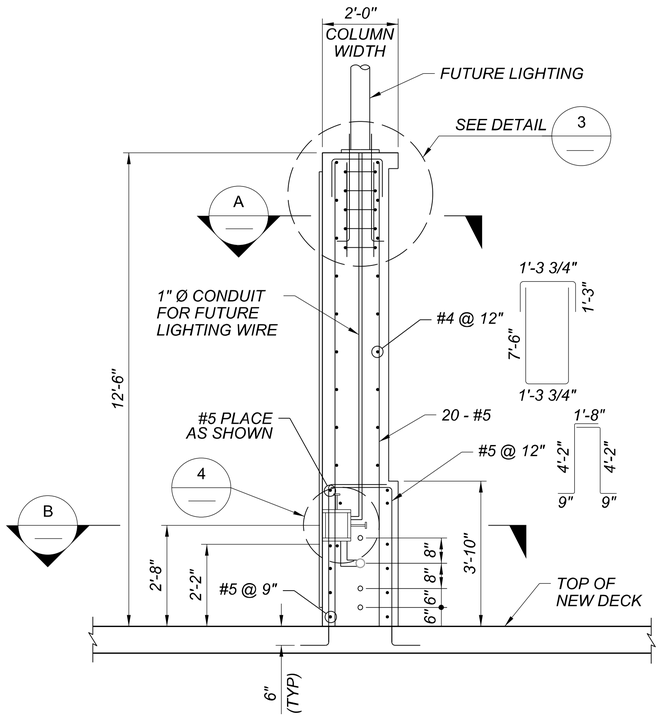

VEHICULAR COLUMN 1 SB03
SCALE: 1/2"=1'-0"

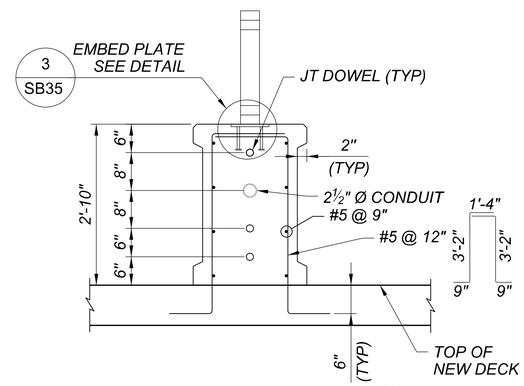

VEHICULAR BARRIER 2 SB03
SCALE: 3/4"=1'-0"

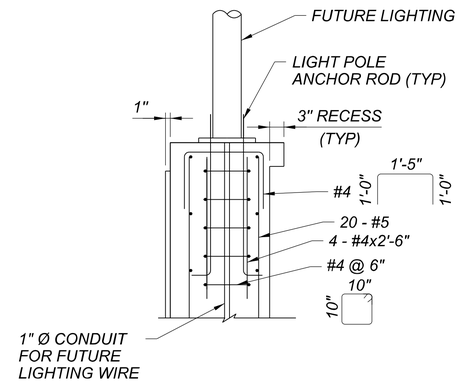

DETAIL 3
SCALE: 3/4"=1'-0"

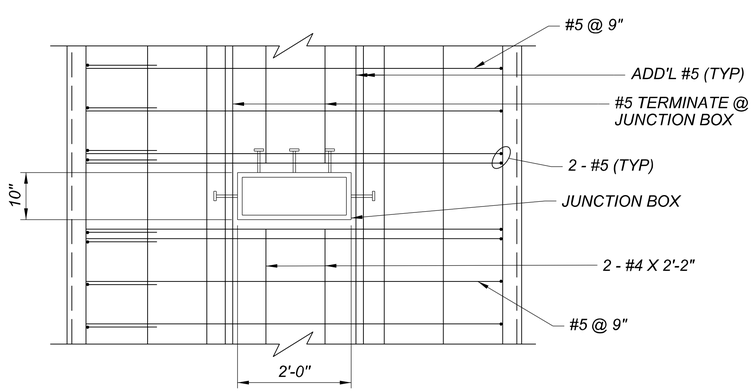

DETAIL 4
SCALE: 3/4"=1'-0"

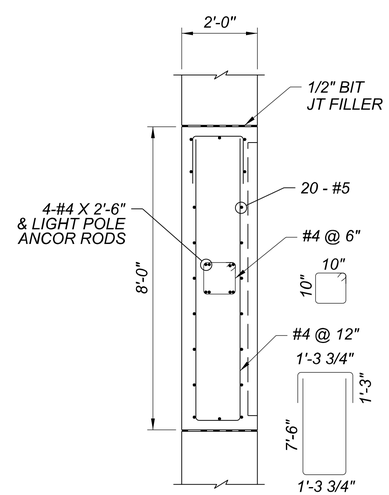

SECTION A
SCALE: 1/2"=1'-0"

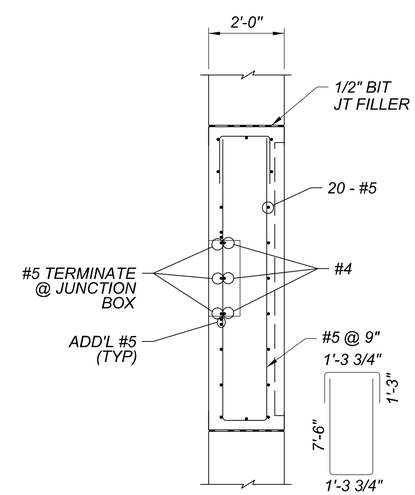

SECTION B
SCALE: 1/2"=1'-0"

DOWEL NOTE:

DOWEL SHALL BE #5 REBAR WITH 6 INCH EFFECTIVE EMBEDMENT. DIAMETER AND DEPTH OF THE DRILL HOLE SHALL BE IN ACCORDANCE WITH EPOXY ADHESIVE MANUFACTURER RECOMMENDATIONS. ANCHOR DOWEL IN HOLE WITH AN APPROVED EPOXY ADHESIVE. THE CRACKED BONDING STRENGTH OF THE EPOXY SHALL BE MINIMUM 1,492 PSI. DETAILS OF THE ANCHORAGE SYSTEM SHALL BE SUBMITTED TO THE ENGINEER FOR APPROVAL PRIOR TO INSTALLATION.

Contact Arizona 811 Two Working Days Before You Dig
ARIZONA811 BLUE STAKE, INC.
Call 811 or Click Arizona811.com

NO.	REVISION	BY	DATE
3			
2			
1			

MARICOPA COUNTY

NORTHERN PARKWAY
103RD AVENUE TO 91ST AVENUE - PHASE 1
PROJECT NO. TT0372

	BY	DATE
DESIGNED	AO	04/2026
DRAWN	BR	04/2026
CHECKED	KLH	04/2026

Registered Professional Engineer (Civil) CERTIFICATE NO. 37060 KODI-LIM HOE Date Signed 5/4/2026 ARIZONA, U.S.A.

TYLin

AESTHETIC RAIL DETAILS 2

SHEET SB34

TRACS NO.

c:\bmstylii-pw\brandon.rudolph@tylin.com\d057\3062\TT0372_SB_NewRiver_34ard2.dgn
Brandon Rudolph OpenRoads_Imperial 11:41:29 AM 5/4/2026 MCDOT_TYLIN_HALF_PRINT.tbl TYLI_GN_bwpdf Half.pltcfg

F.H.W.A. REGION	STATE	PROJECT NO.	SHEET NO.	TOTAL SHEETS	RECORD DRAWING
9	AZ	TT0372	179	224	

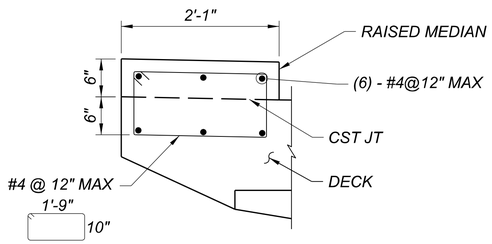

RAISED MEDIAN ON NEW DECK (1 / SB03)

SCALE: 1"=1'-0"

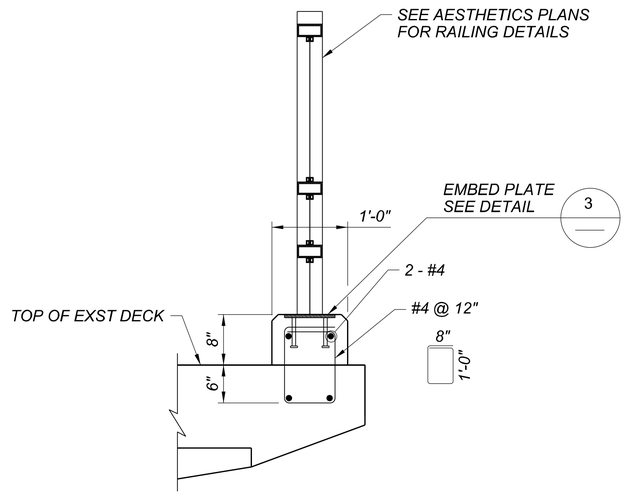

PEDESTRIAN RAIL ON NEW DECK (2 / SB03)

SCALE: 1"=1'-0"

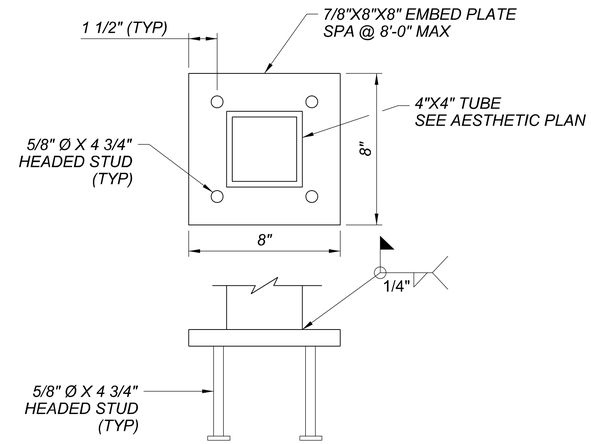

TYPICAL EMBED PLATE (3 / SB34)

NOT TO SCALE

NOTE:

DECK REINFORCEMENT NOT SHOWN. SEE SB22 FOR DETAILS.

Contact Arizona 811 Two Working Days Before You Dig
Call 811 or Click Arizona811.com

NO.	REVISION	BY	DATE
3			
2			
1			

MARICOPA COUNTY

NORTHERN PARKWAY
103RD AVENUE TO 91ST AVENUE - PHASE 1
PROJECT NO. TT0372

	BY	DATE
DESIGNED	AO	04/2026
DRAWN	BR	04/2026
CHECKED	KLH	04/2026

Registered Professional Engineer (Civil) CERTIFICATE NO. 37060 KOOI-LIM HOE Date Signed 4/29/2026 ARIZONA, U.S.A.

TYLin

AESTHETIC RAIL DETAILS 3

SHEET SB35

TRACS NO.

c:\bmstyli-pw\brandon.rudolph@tylin.com\d0573062\TT0372_SB_NewRiver_35ard3.dgn Brandon Rudolph OpenRoads_Imperial 3:49:53 PM 4/29/2026 MCDOT_TYLIN_HALF_PRINT.tbl TYLI_GN_bwpdf Half.pltcfg

F.H.W.A. REGION	STATE	PROJECT NO.	SHEET NO.	TOTAL SHEETS	RECORD DRAWING
9	AZ	TT0372	180	224	

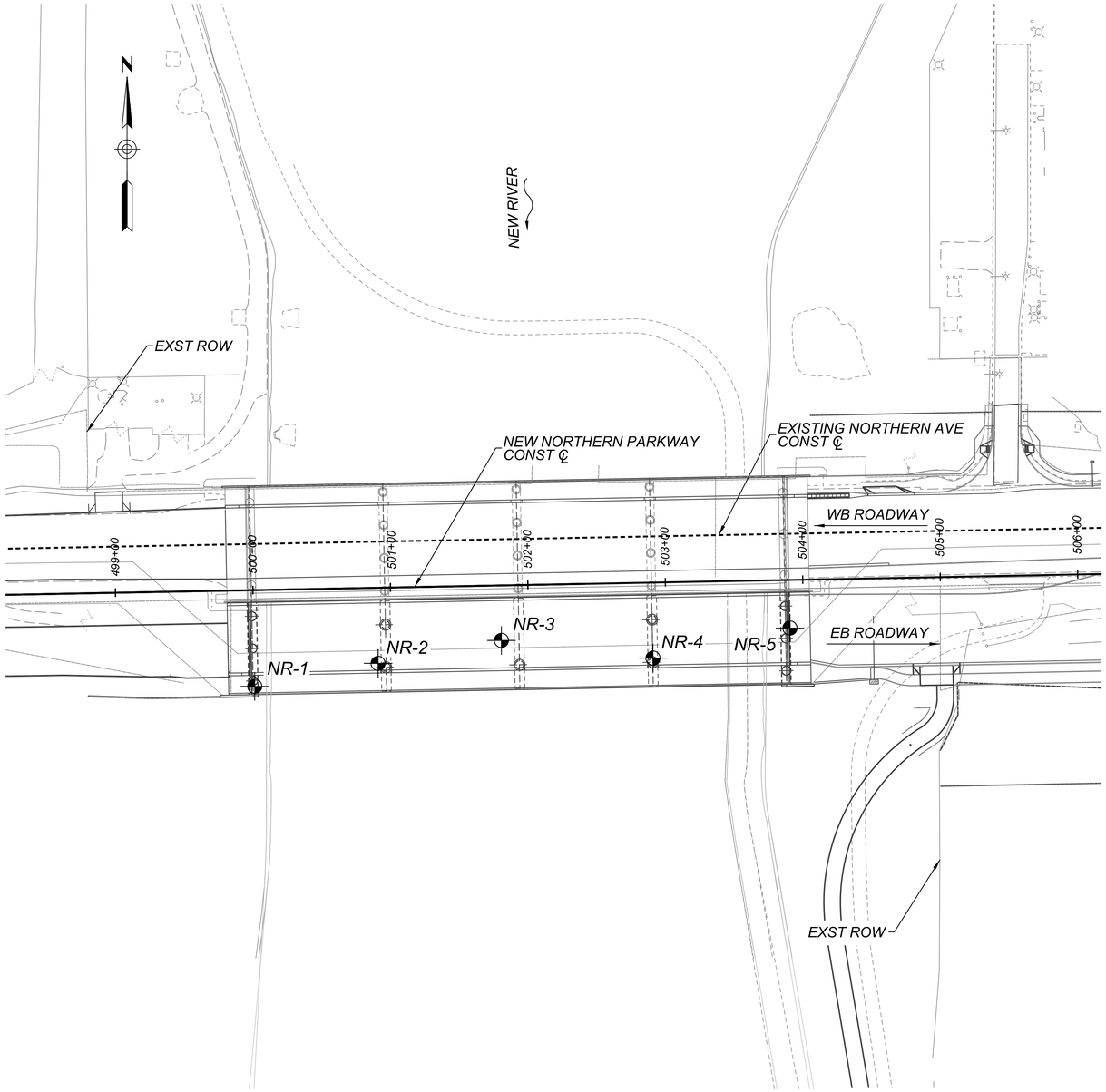

PLAN
Scale: 1"=50'-0"

Boring	Depth	Northern Parkway Cst ℄ Station	Offset
NR-1	115 ft	500+00	70 ft R
NR-2	105 ft	500+90	55 ft R
NR-3	105 ft	501+80	40 ft R
NR-4	105 ft	502+90	55 ft R
NR-5	115 ft	503+90	35 ft R

LEGEND:

Boring Location & ID

NOTES:

1. General soil descriptions and indicated boundaries are based on engineering interpretation of available subsurface information by the geotechnical engineer and may not reflect actual variation in subsurface conditions between borings and samples. The location of contacts between strata shown on the logs are generally approximate, and changes between material types may be gradual rather than abrupt. Classification of soil materials is in general accordance with ASTM D 2488 and is based on field observation unless accompanied by mechanical analysis presented in the Geotechnical Exploration Report.

2. The observed water levels and/or moisture conditions indicated on the boring logs are as recorded at the time of exploration. These water levels and/or moisture conditions may vary considerably with time according to the prevailing climate, rainfall or other factors and are otherwise dependent upon the duration of and methods used in the exploration program.

3. Sound engineering judgment was exercised in preparing the subsurface information presented on these sheets. This information was prepared and is intended for design and estimate purposes. Its presentation on the plans or elsewhere is for the purpose of providing intended users with access to the same information as the County and its designers. This subsurface information interpretation is presented in good faith and is not intended as a substitute for personal investigation, independent interpretations or judgment of the contractor.

4. Excavations may encounter caving sands and groundwater. The Contractor shall be prepared to deal with such conditions.

5. A 140 lb hammer, 30 inch free-fall, was used to drive the 2 inch O.D. Standard Penetration Test (SPT) split-spoon sampler (ASTM D 1586).

6. For further Information, refer to Geotechnical Exploration Report.

7. All Geotechnical reports prepared for this project shall be considered by the drilled shaft contractor in developing bid documents.

Contact Arizona 811 Two Working Days Before You Dig
ARIZONA811 BLUE STAKE, INC.
Call 811 or Click Arizona811.com

NO.	REVISION	BY	DATE
3			
2			
1			

MARICOPA COUNTY

NORTHERN PARKWAY
103RD AVENUE TO 91ST AVENUE - PHASE 1
PROJECT NO. TT0372

	BY	DATE
DESIGNED	FJG	05/2026
DRAWN	HGM	05/2026
CHECKED	JRH	05/2026

Registered Professional Engineer (Civil) CERTIFICATE NO. 47791 JESSE R HUSTON Date Signed 06 May 26 ARIZONA, U.S.A.

ethos ENGINEERING, LLC.
9180 S Kyrene Rd
Suite 104
Tempe, AZ 85284

FOUNDATION DATA SHEET 01

SHEET FD01

TRACS NO.

pw://tyli-pw.bentley.com:tyli-pw-01/Documents/Projects/221991.00_TT0372/600_CADD/05_Official/Dgn/Sheets/ETHOS/FDS/TT0372_FD_Foundation_Data_Sheet_01.dgn 5/6/2026 9:35:05 AM

F.H.W.A. REGION	STATE	PROJECT NO.	SHEET NO.	TOTAL SHEETS	RECORD DRAWING
9	AZ	TT0372	181	224	

BORING NUMBER NR-1

PAGE 1 OF 4

Ethos Engineering, LLC

CLIENT T.Y. Lin International, Inc. **PROJECT NAME** MCDOT Northern Parkway (TT0372)
PROJECT NUMBER 2021015 **PROJECT LOCATION** 103rd Avenue to 91st Avenue, Maricopa County, AZ
DATE STARTED 2/20/2023 **COMPLETED** 2/21/2023 **BORING LOCATION** West Abutment
DRILLER Resilient **DRILLED BY** F. Esparza **GPS COORDINATES** 33.55102°N, -112.27589°E
DRILLING METHOD Tubex **GROUND ELEVATION** 1076 ft **BOREHOLE DEPTH** 116 ft
RIG TYPE / # CME-75 / 113 **GROUNDWATER DEPTH** ---
HAMMER TYPE Auto **HAMMER EFFICIENCY** 87 **LOGGED BY** M. Meza **CHECKED BY** J. Huston

ELEVATION (ft)	DEPTH (ft)	MATERIAL DESCRIPTION	SAMPLE TYPE	BLOW COUNTS (N VALUE)	DRY UNIT WT. (pcf)	MOISTURE CONTENT (%)	ATTERBERG LIMITS: LIQUID LIMIT	PLASTIC LIMIT	PLASTICITY INDEX	FINES CONTENT (%)
1075		SILTY, CLAYEY SAND (SC-SM), some fine gravel, no to low plasticity, dark brown to brown, slightly moist	AU				21	16	5	30
	5		SPT	7-50/5"						
1070										
	10	Note: moderately firm to firm below 10'	R	10-10	106	6				
1065										
	15		SPT	11-11-11 (22)						
1060		SILTY GRAVEL WITH SAND (GM), considerable medium sand, low plasticity, light brown to brown, slightly moist								
	20	SILTY, CLAYEY SAND WITH GRAVEL (SC-SM), some fine gravel, low plasticity, light brown, slightly moist	SPT	18-16-35 (51)						
1055										
	25	GRAVEL WITH SAND (GP), trace cobbles, considerable medium sand, poorly graded, nonplastic, light brown to brown, slightly moist	SPT	50/4"						
1050										
	30		SPT	50/4"						
1045										
	35									

(Continued Next Page)

BORING NUMBER NR-1

PAGE 2 OF 4

Ethos Engineering, LLC

CLIENT T.Y. Lin International, Inc. **PROJECT NAME** MCDOT Northern Parkway (TT0372)
PROJECT NUMBER 2021015 **PROJECT LOCATION** 103rd Avenue to 91st Avenue, Maricopa County, AZ
DATE STARTED 2/20/2023 **COMPLETED** 2/21/2023 **BORING LOCATION** West Abutment
DRILLER Resilient **DRILLED BY** F. Esparza **GPS COORDINATES** 33.55102°N, -112.27589°E
DRILLING METHOD Tubex **GROUND ELEVATION** 1076 ft **BOREHOLE DEPTH** 116 ft
RIG TYPE / # CME-75 / 113 **GROUNDWATER DEPTH** ---
HAMMER TYPE Auto **HAMMER EFFICIENCY** 87 **LOGGED BY** M. Meza **CHECKED BY** J. Huston

ELEVATION (ft)	DEPTH (ft)	MATERIAL DESCRIPTION	SAMPLE TYPE	BLOW COUNTS (N VALUE)	DRY UNIT WT. (pcf)	MOISTURE CONTENT (%)	ATTERBERG LIMITS: LIQUID LIMIT	PLASTIC LIMIT	PLASTICITY INDEX	FINES CONTENT (%)
1040		GRAVEL WITH SAND (GP), trace cobbles, considerable medium sand, poorly graded, nonplastic, light brown to brown, slightly moist*(continued)*	SPT	38-50/5"						
	40	SILTY SAND (SM), trace fine gravel, low plasticity, brown, moist								
1035			R	14-50	96	17	NP	NP	NP	32
	45	SAND (SP), trace fine gravel, poorly graded, nonplastic, light brown, moist								
1030			SPT	6-11-14 (25)						
	50									
1025			SPT	10-10-10 (20)						
	55	CLAYEY SAND (SC), some fine gravel, medium plasticity, brown, moist								
1020		SAND (SP), trace fine gravel, poorly graded, nonplastic, light brown to brown, moist	R	50/4"						
	60									
1015		CLAYEY SAND (SC), trace fine gravel, low plasticity, brown, moist	SPT	10-26-22 (48)						
	65									
1010			R	10-20	100	14				
	70									

(Continued Next Page)

BORING NUMBER NR-1

PAGE 3 OF 4

Ethos Engineering, LLC

CLIENT T.Y. Lin International, Inc. **PROJECT NAME** MCDOT Northern Parkway (TT0372)
PROJECT NUMBER 2021015 **PROJECT LOCATION** 103rd Avenue to 91st Avenue, Maricopa County, AZ
DATE STARTED 2/20/2023 **COMPLETED** 2/21/2023 **BORING LOCATION** West Abutment
DRILLER Resilient **DRILLED BY** F. Esparza **GPS COORDINATES** 33.55102°N, -112.27589°E
DRILLING METHOD Tubex **GROUND ELEVATION** 1076 ft **BOREHOLE DEPTH** 116 ft
RIG TYPE / # CME-75 / 113 **GROUNDWATER DEPTH** ---
HAMMER TYPE Auto **HAMMER EFFICIENCY** 87 **LOGGED BY** M. Meza **CHECKED BY** J. Huston

ELEVATION (ft)	DEPTH (ft)	MATERIAL DESCRIPTION	SAMPLE TYPE	BLOW COUNTS (N VALUE)	DRY UNIT WT. (pcf)	MOISTURE CONTENT (%)	ATTERBERG LIMITS: LIQUID LIMIT	PLASTIC LIMIT	PLASTICITY INDEX	FINES CONTENT (%)
1005		SILTY GRAVEL WITH SAND (GM), trace cobbles, considerable fine to medium sand, nonplastic, light brown, slightly moist*(continued)*	SPT	50/1"						
	75	SILTY SAND WITH GRAVEL (SM), some fine gravel, low plasticity, light brown, moist								
1000			SPT	50/1"						
	80	SILT (ML), occasional fine gravel, trace fine sand, medium plasticity, brown, moist								
995			SPT	5-8-13 (21)						
	85									
990		SILTY SAND (SM), occasional fine gravel, nonplastic, light brown to brown, moist	R	19-32	99	8	NP	NP	NP	15
	90	CLAY (CL), occasional fine gravel, trace fine sand, medium plasticity, brown, moist CLAYEY SAND (SC), trace fine gravel, weak lime cementation, low to medium plasticity, light brown to brown, moist								
985			SPT	9-14-14 (28)						
	95									
980		Note: moderate lime cementation below 95'	R	23-50						
	100									
975		CLAY (CL), occasional fine gravel, trace fine sand, low to medium plasticity, brown, moist	SPT	8-17-20 (37)						
	105	GRAVEL WITH SAND (GP), occasional cobbles, some medium sand, poorly graded, nonplastic, light brown, slightly moist								

(Continued Next Page)

BORING NUMBER NR-1

PAGE 4 OF 4

Ethos Engineering, LLC

CLIENT T.Y. Lin International, Inc. **PROJECT NAME** MCDOT Northern Parkway (TT0372)
PROJECT NUMBER 2021015 **PROJECT LOCATION** 103rd Avenue to 91st Avenue, Maricopa County, AZ
DATE STARTED 2/20/2023 **COMPLETED** 2/21/2023 **BORING LOCATION** West Abutment
DRILLER Resilient **DRILLED BY** F. Esparza **GPS COORDINATES** 33.55102°N, -112.27589°E
DRILLING METHOD Tubex **GROUND ELEVATION** 1076 ft **BOREHOLE DEPTH** 116 ft
RIG TYPE / # CME-75 / 113 **GROUNDWATER DEPTH** ---
HAMMER TYPE Auto **HAMMER EFFICIENCY** 87 **LOGGED BY** M. Meza **CHECKED BY** J. Huston

ELEVATION (ft)	DEPTH (ft)	MATERIAL DESCRIPTION	SAMPLE TYPE	BLOW COUNTS (N VALUE)	DRY UNIT WT. (pcf)	MOISTURE CONTENT (%)	ATTERBERG LIMITS: LIQUID LIMIT	PLASTIC LIMIT	PLASTICITY INDEX	FINES CONTENT (%)
970		GRAVEL WITH SAND (GP), occasional cobbles, some medium sand, poorly graded, nonplastic, light brown, slightly moist*(continued)*	SPT	19-29-35 (64)						
	110									
965		CLAY WITH SAND (CL), occasional fine gravel, some fine sand, low to medium plasticity, brown, moist	SPT	14-7-9 (16)						
	115									
960		GRAVELLY CLAY WITH SAND (CL), considerable gravel, some fine sand, medium plasticity, brown, moist	R	23-50						

Bottom of borehole at 116.0 feet. Backfilled full depth with bentonite-slurry.

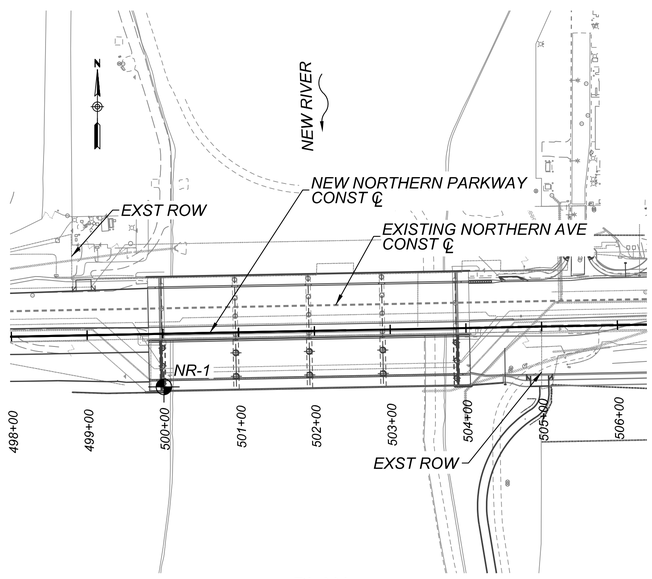

PLAN
Scale: 1"=100'

Contact Arizona 811 Two Working Days Before You Dig
Call 811 or Click Arizona811.com

NO.	REVISION	BY	DATE
3			
2			
1			

MARICOPA COUNTY

NORTHERN PARKWAY
103RD AVENUE TO 91ST AVENUE - PHASE 1
PROJECT NO. TT0372

	BY	DATE
DESIGNED	FJG	05/2026
DRAWN	HGM	05/2026
CHECKED	JRH	05/2026

Registered Professional Engineer (Civil) CERTIFICATE NO. 47791 JESSE R HUSTON Date Signed 05/06/26 ARIZONA, U.S.A.

ethos ENGINEERING, LLC.
9180 S Kyrene Rd
Suite #104
Tempe, AZ 85284

FOUNDATION DATA SHEET 02

SHEET FD02

TRACS NO.

5/6/2026 9:39:09 AM

pw://tyli-pw.bentley.com:tyli-pw-01/Documents/Projects/221991.00_TT0372/600_CADD/05_Official/Dgn/Sheets/ETHOS/FDS/TT0372_FD_Foundation_Data_Sheet_02.dgn

F.H.W.A. REGION	STATE	PROJECT NO.	SHEET NO.	TOTAL SHEETS	RECORD DRAWING
9	AZ	TT0372	182	224	

BORING NUMBER NR-2

PAGE 1 OF 4

Ethos Engineering, LLC

CLIENT T.Y. Lin International, Inc. **PROJECT NAME** MCDOT Northern Parkway (TT0372)
PROJECT NUMBER 2021015 **PROJECT LOCATION** 103rd Avenue to 91st Avenue, Maricopa County, AZ
DATE STARTED 2/28/2023 **COMPLETED** 3/1/2023 **BORING LOCATION** Pier 1
DRILLER Resilient **DRILLED BY** F. Esparza **GPS COORDINATES** 33.55116°N, -112.27557°E
DRILLING METHOD Tubex **GROUND ELEVATION** 1060 ft **BOREHOLE DEPTH** 106.5 ft
RIG TYPE / # CME-75 / 113 **GROUNDWATER DEPTH** ---
HAMMER TYPE Auto **HAMMER EFFICIENCY** 87 **LOGGED BY** M. Meza **CHECKED BY** J. Huston

ELEVATION (ft)	DEPTH (ft)	GRAPHIC LOG	MATERIAL DESCRIPTION	SAMPLE TYPE	BLOW COUNTS (N VALUE)	DRY UNIT WT. (pcf)	MOISTURE CONTENT (%)	ATTERBERG LIMITS: LIQUID LIMIT	PLASTIC LIMIT	PLASTICITY INDEX	FINES CONTENT (%)
1060			GRAVEL WITH SAND (GP), considerable medium to coarse sand, poorly graded, no to low plasticity, light brown to light gray, moist								
1055	5			SPT	16-25-30 (55)			22	17	5	4
			Note: slightly Moist, occassional cobbles below 7'								
1050	10			SPT	15-50/4"						
			Note: increased cobbles below 11'								
1045	15			SPT	21-50/5"						
1040	20		SAND WITH CLAY (SP-SC), considerable gravel, poorly graded, low plasticity, grayish brown to brown, moist	SPT	12-19-28 (47)						
1035	25		SAND WITH SILT AND GRAVEL (SP-SM), considerable gravel, poorly graded, nonplastic, grayish brown to brown, moist	SPT	16-29-39 (68)						
1030	30		SANDY CLAY (CL), trace fine gravel, considerable fine sand, low plasticity, brown, moist	SPT	1-2-8 (10)						
1025	35		SAND (SP), trace fine gravel, poorly graded, nonplastic, light brown, moist								

(Continued Next Page)

BORING NUMBER NR-2

PAGE 2 OF 4

Ethos Engineering, LLC

CLIENT T.Y. Lin International, Inc. **PROJECT NAME** MCDOT Northern Parkway (TT0372)
PROJECT NUMBER 2021015 **PROJECT LOCATION** 103rd Avenue to 91st Avenue, Maricopa County, AZ
DATE STARTED 2/28/2023 **COMPLETED** 3/1/2023 **BORING LOCATION** Pier 1
DRILLER Resilient **DRILLED BY** F. Esparza **GPS COORDINATES** 33.55116°N, -112.27557°E
DRILLING METHOD Tubex **GROUND ELEVATION** 1060 ft **BOREHOLE DEPTH** 106.5 ft
RIG TYPE / # CME-75 / 113 **GROUNDWATER DEPTH** ---
HAMMER TYPE Auto **HAMMER EFFICIENCY** 87 **LOGGED BY** M. Meza **CHECKED BY** J. Huston

ELEVATION (ft)	DEPTH (ft)	GRAPHIC LOG	MATERIAL DESCRIPTION	SAMPLE TYPE	BLOW COUNTS (N VALUE)	DRY UNIT WT. (pcf)	MOISTURE CONTENT (%)	ATTERBERG LIMITS: LIQUID LIMIT	PLASTIC LIMIT	PLASTICITY INDEX	FINES CONTENT (%)
1025			SILTY GRAVEL WITH SAND (GP-GM), considerable medium to coarse sand, nonplastic, light brown to brown, moist	R	18-42	101	9	NP	NP	NP	10
1020	40		SAND (SP), trace fine gravel, poorly graded, nonplastic, brown, moist	SPT	10-27-37 (64)						
1015	45		SANDY CLAY (CL), trace fine gravel, considerable fine sand, low plasticity, brown, moist	SPT	5-12-22 (34)						
1010	50		SAND WITH GRAVEL (SP), some gravel, poorly graded, nonplastic, brown, moist	R	12-20	104	11				
1005	55		SILT (ML), trace fine gravel, trace fine sand, medium plasticity, brown, moist	SPT	50/5"						
			Note: strong lime cementation, slightly moist, light brown below 58'								
1000	60			SPT	50/4"						
995	65		SANDY SILT (ML), trace fine gravel, considerable fine sand, low to medium plasticity, brown, moist	R	5-19						
990	70		SAND (SP), trace fine gravel, poorly graded, nonplastic, light brown to brown, moist								

(Continued Next Page)

BORING NUMBER NR-2

PAGE 3 OF 4

Ethos Engineering, LLC

CLIENT T.Y. Lin International, Inc. **PROJECT NAME** MCDOT Northern Parkway (TT0372)
PROJECT NUMBER 2021015 **PROJECT LOCATION** 103rd Avenue to 91st Avenue, Maricopa County, AZ
DATE STARTED 2/28/2023 **COMPLETED** 3/1/2023 **BORING LOCATION** Pier 1
DRILLER Resilient **DRILLED BY** F. Esparza **GPS COORDINATES** 33.55116°N, -112.27557°E
DRILLING METHOD Tubex **GROUND ELEVATION** 1060 ft **BOREHOLE DEPTH** 106.5 ft
RIG TYPE / # CME-75 / 113 **GROUNDWATER DEPTH** ---
HAMMER TYPE Auto **HAMMER EFFICIENCY** 87 **LOGGED BY** M. Meza **CHECKED BY** J. Huston

ELEVATION (ft)	DEPTH (ft)	GRAPHIC LOG	MATERIAL DESCRIPTION	SAMPLE TYPE	BLOW COUNTS (N VALUE)	DRY UNIT WT. (pcf)	MOISTURE CONTENT (%)	ATTERBERG LIMITS: LIQUID LIMIT	PLASTIC LIMIT	PLASTICITY INDEX	FINES CONTENT (%)
990			CLAYEY SAND (SC), some fine gravel, strong lime cementation, low plasticity, light brown, moist	SPT	5-50/5"						
985	75		SANDY SILT (ML), trace fine gravel, considerable fine sand, low to medium plasticity, brown, moist	R	11-50	88	28	34	25	9	55
980	80			SPT	4-9-15 (24)						
975	85		SAND WITH GRAVEL (SP), considerable fine to coarse gravel, poorly graded, nonplastic, light brown, slightly moist	SPT	12-14-21 (35)						
970	90		CLAYEY SAND (SC), trace fine gravel, strong lime cementation, low to medium plasticity, light brown, slightly moist	SPT	12-50/5"						
965	95		Note: firm, moist, brown below 95'	SPT	6-12-11 (23)						
960	100		SILTY SAND (SM), trace fine gravel, no to low plasticity, light brown to brown, moist	R	25-50	87	19	NP	NP	NP	29
955	105										

(Continued Next Page)

BORING NUMBER NR-2

PAGE 4 OF 4

Ethos Engineering, LLC

CLIENT T.Y. Lin International, Inc. **PROJECT NAME** MCDOT Northern Parkway (TT0372)
PROJECT NUMBER 2021015 **PROJECT LOCATION** 103rd Avenue to 91st Avenue, Maricopa County, AZ
DATE STARTED 2/28/2023 **COMPLETED** 3/1/2023 **BORING LOCATION** Pier 1
DRILLER Resilient **DRILLED BY** F. Esparza **GPS COORDINATES** 33.55116°N, -112.27557°E
DRILLING METHOD Tubex **GROUND ELEVATION** 1060 ft **BOREHOLE DEPTH** 106.5 ft
RIG TYPE / # CME-75 / 113 **GROUNDWATER DEPTH** ---
HAMMER TYPE Auto **HAMMER EFFICIENCY** 87 **LOGGED BY** M. Meza **CHECKED BY** J. Huston

ELEVATION (ft)	DEPTH (ft)	GRAPHIC LOG	MATERIAL DESCRIPTION	SAMPLE TYPE	BLOW COUNTS (N VALUE)	DRY UNIT WT. (pcf)	MOISTURE CONTENT (%)	ATTERBERG LIMITS: LIQUID LIMIT	PLASTIC LIMIT	PLASTICITY INDEX	FINES CONTENT (%)
955			SAND WITH GRAVEL (SP), some fine gravel, poorly graded, nonplastic, light brown, moist *(continued)*	SPT	12-15-28 (43)						
			Bottom of borehole at 106.5 feet. Backfilled full depth with bentonite-slurry.								

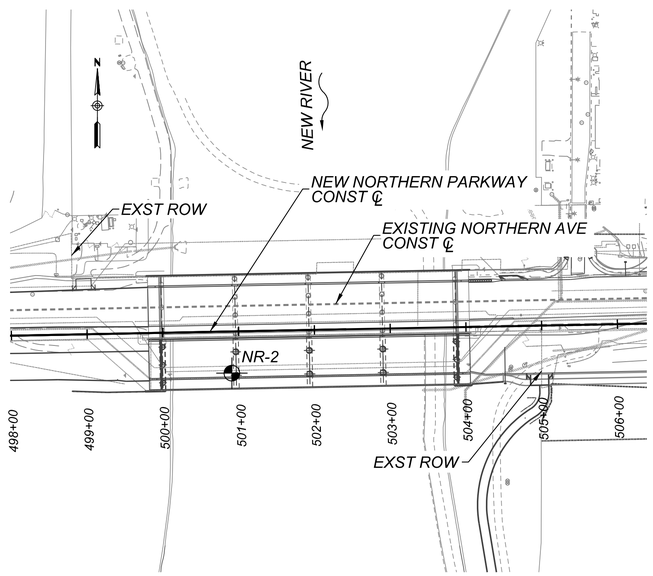

PLAN
Scale: 1"=100'

Contact Arizona 811 Two Working Days Before You Dig
Call 811 or Click Arizona811.com

NO.	REVISION	BY	DATE
3			
2			
1			

MARICOPA COUNTY

NORTHERN PARKWAY
103RD AVENUE TO 91ST AVENUE - PHASE 1
PROJECT NO. TT0372

	BY	DATE
DESIGNED	FJG	05/2026
DRAWN	HGM	05/2026
CHECKED	JRH	05/2026

Registered Professional Engineer (Civil) CERTIFICATE NO. 47791 JESSE R HUSTON Date Signed 05/06/26 ARIZONA, U.S.A.

ethos ENGINEERING, LLC.
9180 S Kyrene Rd
Suite #104
Tempe, AZ 85284

FOUNDATION DATA SHEET 03

SHEET FD03

TRACS NO.

5/6/2026 9:41:11 AM

pw://tyli-pw.bentley.com:tyli-pw-01/Documents/Projects/221991.00_TT0372/600_CADD/05_Official/Dgn/Sheets/ETHOS/FDS/TT0372_FD_Foundation_Data_Sheet_03.dgn

F.H.W.A. REGION	STATE	PROJECT NO.	SHEET NO.	TOTAL SHEETS	RECORD DRAWING
9	AZ	TT0372	183	224	

BORING NUMBER NR-3

PAGE 1 OF 4

Ethos Engineering, LLC

CLIENT T.Y. Lin International, Inc. **PROJECT NAME** MCDOT Northern Parkway (TT0372)
PROJECT NUMBER 2021015 **PROJECT LOCATION** 103rd Avenue to 91st Avenue, Maricopa County, AZ
DATE STARTED 3/30/2023 **COMPLETED** 3/31/2023 **BORING LOCATION** Pier 2
DRILLER Resilient **DRILLED BY** F. Esparza **GPS COORDINATES** 33.5511°N, -112.27529°E
DRILLING METHOD Tubex **GROUND ELEVATION** 1062 ft **BOREHOLE DEPTH** 106.5 ft
RIG TYPE / # CME-75 / 113 **GROUNDWATER DEPTH** ---
HAMMER TYPE Auto **HAMMER EFFICIENCY** 87 **LOGGED BY** M. Meza **CHECKED BY** J. Huston

ELEVATION (ft)	DEPTH (ft)	GRAPHIC LOG	MATERIAL DESCRIPTION	SAMPLE TYPE	BLOW COUNTS (N VALUE)	DRY UNIT WT. (pcf)	MOISTURE CONTENT (%)	ATTERBERG LIMITS: LIQUID LIMIT	PLASTIC LIMIT	PLASTICITY INDEX	FINES CONTENT (%)
1060			CLAYEY SAND WITH GRAVEL (SC), considerable fine gravel, medium plasticity, light brown to gray, moist								
	5			AU / SPT	25-27-50/3"			28	14	14	16
1055											
	10			SPT	17-23-35 (58)						
1050											
	15		GRAVELLY CLAY (GC), considerable fine gravel, trace fine sand, medium to high plasticity, moist	SPT	17-12-9 (21)						
1045											
	20		SAND (SP), some fine gravel, poorly graded, nonplastic, light brown to red, moist	R	22-20	107	12				
1040											
	25		SILTY SAND (SM), trace fine gravel, low plasticity, brown, moist	SPT	12-15-10 (25)						
1035											
	30		SAND WITH SILT AND GRAVEL (SP-SM), some fine gravel, poorly graded, no to low plasticity, brown, moist	R	25-20	118	8				
1030											
	35		CLAYEY SAND (SC), trace fine gravel, medium plasticity, brown, moist								

(Continued Next Page)

BORING NUMBER NR-3

PAGE 2 OF 4

Ethos Engineering, LLC

CLIENT T.Y. Lin International, Inc. **PROJECT NAME** MCDOT Northern Parkway (TT0372)
PROJECT NUMBER 2021015 **PROJECT LOCATION** 103rd Avenue to 91st Avenue, Maricopa County, AZ
DATE STARTED 3/30/2023 **COMPLETED** 3/31/2023 **BORING LOCATION** Pier 2
DRILLER Resilient **DRILLED BY** F. Esparza **GPS COORDINATES** 33.5511°N, -112.27529°E
DRILLING METHOD Tubex **GROUND ELEVATION** 1062 ft **BOREHOLE DEPTH** 106.5 ft
RIG TYPE / # CME-75 / 113 **GROUNDWATER DEPTH** ---
HAMMER TYPE Auto **HAMMER EFFICIENCY** 87 **LOGGED BY** M. Meza **CHECKED BY** J. Huston

ELEVATION (ft)	DEPTH (ft)	GRAPHIC LOG	MATERIAL DESCRIPTION	SAMPLE TYPE	BLOW COUNTS (N VALUE)	DRY UNIT WT. (pcf)	MOISTURE CONTENT (%)	ATTERBERG LIMITS: LIQUID LIMIT	PLASTIC LIMIT	PLASTICITY INDEX	FINES CONTENT (%)
1025			CLAYEY SAND (SC), trace fine gravel, medium plasticity, brown, moist *(continued)*	SPT	8-9-15 (24)						
	40										
1020				SPT	9-12-18 (30)						
	45		Note: hard, weak to moderate cementation below 45'	R	33-50	101	19				
1015											
	50		CLAY WITH SAND (CL), occasional fine gravel, some fine sand, low to medium plasticity, light brown, slightly moist	SPT	50/4"						
1010											
	55		SAND (SP), some fine gravel, poorly graded, nonplastic, light brown to gray, slightly moist	SPT	14-17-20 (37)						
1005			SILTY GRAVEL WITH SAND (GM), occasional cobbles, some medium sand, no to low plasticity, light brown to gray, slightly moist								
	60		SANDY CLAY (CL), trace fine gravel, considerable fine sand, weak lime cementation, medium plasticity, light brown, slightly moist to moist	SPT	24-14-16 (30)			33	16	17	63
1000											
	65		Note: hard at 65'	SPT	3-5-50/2"						
995											
	70										

(Continued Next Page)

BORING NUMBER NR-3

PAGE 3 OF 4

Ethos Engineering, LLC

CLIENT T.Y. Lin International, Inc. **PROJECT NAME** MCDOT Northern Parkway (TT0372)
PROJECT NUMBER 2021015 **PROJECT LOCATION** 103rd Avenue to 91st Avenue, Maricopa County, AZ
DATE STARTED 3/30/2023 **COMPLETED** 3/31/2023 **BORING LOCATION** Pier 2
DRILLER Resilient **DRILLED BY** F. Esparza **GPS COORDINATES** 33.5511°N, -112.27529°E
DRILLING METHOD Tubex **GROUND ELEVATION** 1062 ft **BOREHOLE DEPTH** 106.5 ft
RIG TYPE / # CME-75 / 113 **GROUNDWATER DEPTH** ---
HAMMER TYPE Auto **HAMMER EFFICIENCY** 87 **LOGGED BY** M. Meza **CHECKED BY** J. Huston

ELEVATION (ft)	DEPTH (ft)	GRAPHIC LOG	MATERIAL DESCRIPTION	SAMPLE TYPE	BLOW COUNTS (N VALUE)	DRY UNIT WT. (pcf)	MOISTURE CONTENT (%)	ATTERBERG LIMITS: LIQUID LIMIT	PLASTIC LIMIT	PLASTICITY INDEX	FINES CONTENT (%)
990			SANDY CLAY (CL), trace fine gravel, considerable fine sand, weak lime cementation, medium plasticity, light brown, slightly moist to moist *(continued)*	SPT	4-7-15 (22)						
	75		SAND (SP), trace fine gravel, poorly graded, nonplastic, light brown, slightly moist								
985			CLAYEY GRAVEL WITH SAND (GC), some fine sand, medium plasticity, light brown to brown, moist								
	80		SILTY GRAVEL (GM), occasional cobbles, trace fine sand, no to low plasticity, light gray, slightly moist								
980			CLAY WITH SAND (CL), occasional fine gravel, some fine sand, medium plasticity, brown to light brown, slightly moist	SPT	11-50/3"						
	85		CLAYEY SAND (SC), trace fine gravel, low to medium plasticity, brown, moist	SPT	5-11-50/2"	100	15				
975											
	90		SAND (SP), trace fine gravel, poorly graded, nonplastic, brown to gray, moist	SPT	18-21-32 (53)						
970											
	95		CLAYEY SAND (SC), trace fine gravel, moderate lime cementation, low to medium plasticity, light brown to brown, slightly moist	SPT	6-50/2"						
965											
	100			SPT	50/5"						
960											
	105										

(Continued Next Page)

BORING NUMBER NR-3

PAGE 4 OF 4

Ethos Engineering, LLC

CLIENT T.Y. Lin International, Inc. **PROJECT NAME** MCDOT Northern Parkway (TT0372)
PROJECT NUMBER 2021015 **PROJECT LOCATION** 103rd Avenue to 91st Avenue, Maricopa County, AZ
DATE STARTED 3/30/2023 **COMPLETED** 3/31/2023 **BORING LOCATION** Pier 2
DRILLER Resilient **DRILLED BY** F. Esparza **GPS COORDINATES** 33.5511°N, -112.27529°E
DRILLING METHOD Tubex **GROUND ELEVATION** 1062 ft **BOREHOLE DEPTH** 106.5 ft
RIG TYPE / # CME-75 / 113 **GROUNDWATER DEPTH** ---
HAMMER TYPE Auto **HAMMER EFFICIENCY** 87 **LOGGED BY** M. Meza **CHECKED BY** J. Huston

ELEVATION (ft)	DEPTH (ft)	GRAPHIC LOG	MATERIAL DESCRIPTION	SAMPLE TYPE	BLOW COUNTS (N VALUE)	DRY UNIT WT. (pcf)	MOISTURE CONTENT (%)	ATTERBERG LIMITS: LIQUID LIMIT	PLASTIC LIMIT	PLASTICITY INDEX	FINES CONTENT (%)
			CLAY WITH SAND (CL), occasional fine gravel, some fine sand, weak lime cementation, medium plasticity, brown, moist	SPT	4-8-27 (35)						
			Bottom of borehole at 106.5 feet. Backfilled full depth with bentonite-slurry.								

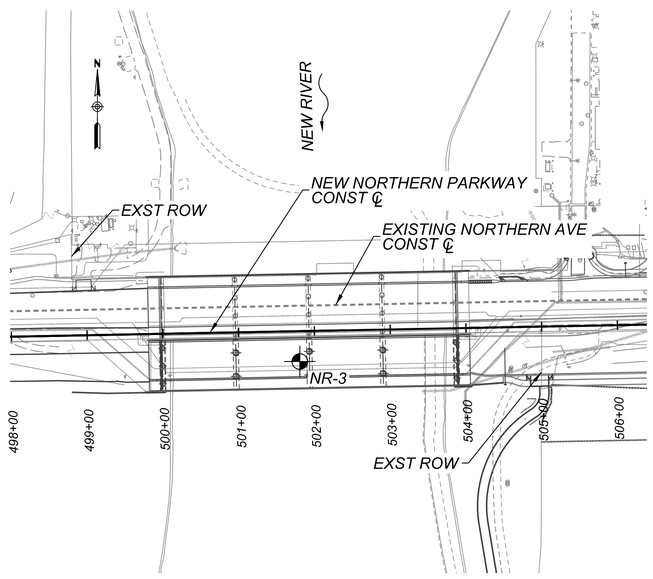

PLAN
Scale: 1"=100'

Contact Arizona 811 Two Working Days Before You Dig
Call 811 or Click Arizona811.com

NO.	REVISION	BY	DATE
3			
2			
1			

MARICOPA COUNTY

NORTHERN PARKWAY
103RD AVENUE TO 91ST AVENUE - PHASE 1
PROJECT NO. TT0372

	BY	DATE
DESIGNED	FJG	05/2026
DRAWN	HGM	05/2026
CHECKED	JRH	05/2026

Registered Professional Engineer (Civil) CERTIFICATE NO. 47791 JESSE R HUSTON Date Signed 05/06/26 ARIZONA, U.S.A.

ethos ENGINEERING, LLC.
9180 S Kyrene Rd
Suite #104
Tempe, AZ 85284

FOUNDATION DATA SHEET 04

SHEET FD04

TRACS NO.

5/6/2026 9:43:13 AM

pw://tyli-pw.bentley.com:tyli-pw-01/Documents/Projects/221991.00_TT0372/600_CADD/05_Official/Dgn/Sheets/ETHOS/FDS/TT0372_FD_Foundation_Data_Sheet_04.dgn

F.H.W.A. REGION	STATE	PROJECT NO.	SHEET NO.	TOTAL SHEETS	RECORD DRAWING
9	AZ	TT0372	184	224	

BORING NUMBER NR-4

PAGE 1 OF 4

Ethos Engineering, LLC

CLIENT T.Y. Lin International, Inc. **PROJECT NAME** MCDOT Northern Parkway (TT0372)
PROJECT NUMBER 2021015 **PROJECT LOCATION** 103rd Avenue to 91st Avenue, Maricopa County, AZ
DATE STARTED 2/24/2023 **COMPLETED** 2/27/2023 **BORING LOCATION** Pier 3
DRILLER Resilient **DRILLED BY** F. Esparza **GPS COORDINATES** 33.55118°N, -112.27492°E
DRILLING METHOD Tubex **GROUND ELEVATION** 1062 ft **BOREHOLE DEPTH** 106 ft
RIG TYPE / # CME-75 / 113 **GROUNDWATER DEPTH** ---
HAMMER TYPE Auto **HAMMER EFFICIENCY** 87 **LOGGED BY** M. Meza **CHECKED BY** J. Huston

ELEVATION (ft)	DEPTH (ft)	GRAPHIC LOG	MATERIAL DESCRIPTION	SAMPLE TYPE	BLOW COUNTS (N VALUE)	DRY UNIT WT. (pcf)	MOISTURE CONTENT (%)	ATTERBERG LIMITS: LIQUID LIMIT	ATTERBERG LIMITS: PLASTIC LIMIT	ATTERBERG LIMITS: PLASTICITY INDEX	FINES CONTENT (%)
			SILTY GRAVEL WITH SAND (GP-GM), occasional cobbles, some medium to coarse sand, no to low plasticity, dark brown to brown, moist								
1060											
	5			SPT	31-50/1"						
1055			Note: increased cobbles below 7'								
	10			SPT	50/1"						
1050											
	15			SPT	50/2"						
1045											
	20			SPT	24-32-50/5"						
1040											
	25		SANDY CLAY (CL), occasional fine gravel, considerable fine sand, low to medium plasticity, brown, moist	SPT	1-4-5 (9)			35	23	12	62
1035											
	30		Note: hard, moderate cementation below 30'	R	31-50	94	18				
1030			SILTY SAND (SM), trace fine gravel, nonplastic, brown, moist								
	35										

(Continued Next Page)

BORING NUMBER NR-4

PAGE 2 OF 4

Ethos Engineering, LLC

CLIENT T.Y. Lin International, Inc. **PROJECT NAME** MCDOT Northern Parkway (TT0372)
PROJECT NUMBER 2021015 **PROJECT LOCATION** 103rd Avenue to 91st Avenue, Maricopa County, AZ
DATE STARTED 2/24/2023 **COMPLETED** 2/27/2023 **BORING LOCATION** Pier 3
DRILLER Resilient **DRILLED BY** F. Esparza **GPS COORDINATES** 33.55118°N, -112.27492°E
DRILLING METHOD Tubex **GROUND ELEVATION** 1062 ft **BOREHOLE DEPTH** 106 ft
RIG TYPE / # CME-75 / 113 **GROUNDWATER DEPTH** ---
HAMMER TYPE Auto **HAMMER EFFICIENCY** 87 **LOGGED BY** M. Meza **CHECKED BY** J. Huston

ELEVATION (ft)	DEPTH (ft)	GRAPHIC LOG	MATERIAL DESCRIPTION	SAMPLE TYPE	BLOW COUNTS (N VALUE)	DRY UNIT WT. (pcf)	MOISTURE CONTENT (%)	ATTERBERG LIMITS: LIQUID LIMIT	ATTERBERG LIMITS: PLASTIC LIMIT	ATTERBERG LIMITS: PLASTICITY INDEX	FINES CONTENT (%)
			SILTY SAND (SM), trace fine gravel, nonplastic, brown, moist*(continued)*	SPT	8-11-15 (26)						
1025											
	40		SILTY GRAVEL WITH SAND (GM), some medium to coarse sand, low plasticity, light brown to brown, moist	SPT	17-50/3"						
1020											
			CLAYEY SAND (SC), trace fine gravel, low plasticity, brown, moist								
	45			R	9-31	92	27				
1015											
	50		SANDY CLAY (CL), occasional fine gravel, considerable fine sand, medium plasticity, brown, moist	SPT	7-8-12 (20)						
1010											
	55		SAND WITH GRAVEL (SP), considerable gravel, poorly graded, nonplastic, light brown, slightly moist	SPT	6-18-21 (39)						
1005											
	60		GRAVELLY SILT WITH SAND (ML), considerable fine gravel, some fine to coarse sand, weak to moderate lime cementation, medium plasticity, light brown to brown, slightly moist to moist	SPT	8-11-50 (61)						
1000											
	65			R	21-26	97	26	48	30	18	59
995											
	70										

(Continued Next Page)

BORING NUMBER NR-4

PAGE 3 OF 4

Ethos Engineering, LLC

CLIENT T.Y. Lin International, Inc. **PROJECT NAME** MCDOT Northern Parkway (TT0372)
PROJECT NUMBER 2021015 **PROJECT LOCATION** 103rd Avenue to 91st Avenue, Maricopa County, AZ
DATE STARTED 2/24/2023 **COMPLETED** 2/27/2023 **BORING LOCATION** Pier 3
DRILLER Resilient **DRILLED BY** F. Esparza **GPS COORDINATES** 33.55118°N, -112.27492°E
DRILLING METHOD Tubex **GROUND ELEVATION** 1062 ft **BOREHOLE DEPTH** 106 ft
RIG TYPE / # CME-75 / 113 **GROUNDWATER DEPTH** ---
HAMMER TYPE Auto **HAMMER EFFICIENCY** 87 **LOGGED BY** M. Meza **CHECKED BY** J. Huston

ELEVATION (ft)	DEPTH (ft)	GRAPHIC LOG	MATERIAL DESCRIPTION	SAMPLE TYPE	BLOW COUNTS (N VALUE)	DRY UNIT WT. (pcf)	MOISTURE CONTENT (%)	ATTERBERG LIMITS: LIQUID LIMIT	ATTERBERG LIMITS: PLASTIC LIMIT	ATTERBERG LIMITS: PLASTICITY INDEX	FINES CONTENT (%)
			GRAVELLY SILT WITH SAND (ML), considerable fine gravel, some fine to coarse sand, weak to moderate lime cementation, medium plasticity, light brown to brown, slightly moist to moist*(continued)*	SPT	3-6-13 (19)						
990			Note: firm, no cementation at 70'								
			SAND (SP), trace fine gravel, poorly graded, nonplastic, brown, slightly moist								
	75										
			CLAYEY SAND (SC), trace to some fine gravel, low plasticity, light brown to brown, slightly moist	SPT	21-50/4"						
985											
			Note: increased gravel below 78'								
	80										
980			Note: strong cementation between 80' and 83'	SPT	50/2"						
			Note: trace gravel, brown, weak lime cementation below 84'								
	85										
975				SPT	4-20-16 (36)						
	90		SAND WITH GRAVEL (SP-SM), considerable fine gravel, poorly graded, nonplastic, light brown, slightly moist	R	9-16	104	7	NP	NP	NP	7
970											
	95		CLAYEY SAND WITH GRAVEL (SC), considerable fine gravel, considerable clay, strong lime cementation, light brown, slightly moist	SPT	50/5"						
965											
	100		SANDY CLAY (CL), trace fine gravel, considerable fine sand, weak lime cementation, medium plasticity, light brown to brown, moist	SPT	15-15-10 (25)						
960											
	105										

(Continued Next Page)

BORING NUMBER NR-4

PAGE 4 OF 4

Ethos Engineering, LLC

CLIENT T.Y. Lin International, Inc. **PROJECT NAME** MCDOT Northern Parkway (TT0372)
PROJECT NUMBER 2021015 **PROJECT LOCATION** 103rd Avenue to 91st Avenue, Maricopa County, AZ
DATE STARTED 2/24/2023 **COMPLETED** 2/27/2023 **BORING LOCATION** Pier 3
DRILLER Resilient **DRILLED BY** F. Esparza **GPS COORDINATES** 33.55118°N, -112.27492°E
DRILLING METHOD Tubex **GROUND ELEVATION** 1062 ft **BOREHOLE DEPTH** 106 ft
RIG TYPE / # CME-75 / 113 **GROUNDWATER DEPTH** ---
HAMMER TYPE Auto **HAMMER EFFICIENCY** 87 **LOGGED BY** M. Meza **CHECKED BY** J. Huston

ELEVATION (ft)	DEPTH (ft)	GRAPHIC LOG	MATERIAL DESCRIPTION	SAMPLE TYPE	BLOW COUNTS (N VALUE)	DRY UNIT WT. (pcf)	MOISTURE CONTENT (%)	ATTERBERG LIMITS: LIQUID LIMIT	ATTERBERG LIMITS: PLASTIC LIMIT	ATTERBERG LIMITS: PLASTICITY INDEX	FINES CONTENT (%)
			Note: brown, no cementation below 105'	R	7-12						

Bottom of borehole at 106.0 feet. Backfilled full depth with bentonite-slurry.

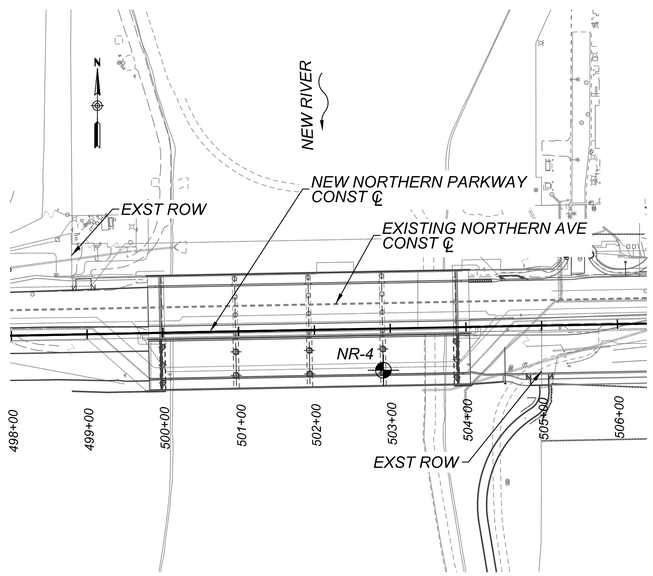

PLAN
Scale: 1"=100'

Contact Arizona 811 Two Working Days Before You Dig
Call 811 or Click Arizona811.com

NO.	REVISION	BY	DATE
3			
2			
1			

MARICOPA COUNTY

NORTHERN PARKWAY
103RD AVENUE TO 91ST AVENUE - PHASE 1
PROJECT NO. TT0372

	BY	DATE
DESIGNED	FJG	05/2026
DRAWN	HGM	05/2026
CHECKED	JRH	05/2026

Registered Professional Engineer (Civil) CERTIFICATE NO. 47791 JESSE R HUSTON Date Signed 05/06/26 ARIZONA, U.S.A.

ethos ENGINEERING, LLC.
9180 S Kyrene Rd
Suite #104
Tempe, AZ 85284

FOUNDATION DATA SHEET 05

SHEET FD05

TRACS NO.

5/6/2026 9:46:15 AM

pw://tyli-pw.bentley.com:tyli-pw-01/Documents/Projects/221991.00_TT0372/600_CADD/05_Official/Dgn/Sheets/ETHOS/FDS/TT0372_FD_Foundation_Data_Sheet_05.dgn

F.H.W.A. REGION	STATE	PROJECT NO.	SHEET NO.	TOTAL SHEETS	RECORD DRAWING
9	AZ	TT0372	185	224	

BORING NUMBER NR-5

PAGE 1 OF 4

ethos ENGINEERING, LLC. Ethos Engineering, LLC

CLIENT T.Y. Lin International, Inc. **PROJECT NAME** MCDOT Northern Parkway (TT0372)
PROJECT NUMBER 2021015 **PROJECT LOCATION** 103rd Avenue to 91st Avenue, Maricopa County, AZ
DATE STARTED 2/22/2023 **COMPLETED** 2/23/2023 **BORING LOCATION** East Abutment
DRILLER Resilient **DRILLED BY** F. Esparza **GPS COORDINATES** 33.55104°N, -112.27461°E
DRILLING METHOD Tubex **GROUND ELEVATION** 1077 ft **BOREHOLE DEPTH** 116.2 ft
RIG TYPE / # CME-75 / 113 **GROUNDWATER DEPTH** ---
HAMMER TYPE Auto **HAMMER EFFICIENCY** 87 **LOGGED BY** M. Meza **CHECKED BY** J. Huston

ELEVATION (ft)	DEPTH (ft)	MATERIAL DESCRIPTION	SAMPLE TYPE	BLOW COUNTS (N VALUE)	DRY UNIT WT. (pcf)	MOISTURE CONTENT (%)	ATTERBERG LIMITS: LIQUID LIMIT	PLASTIC LIMIT	PLASTICITY INDEX	FINES CONTENT (%)
1075		SILTY, CLAYEY SAND WITH GRAVEL (SC-SM), considerable fine gravel, low plasticity, dark brown to brown, moist	AU				22	16	6	21
	5		SPT	1-9-11 (20)						
1070		SILTY GRAVEL WITH SAND (GP-GM), some fine to medium sand, low plasticity, dark brown to brown, moist								
	10		SPT	10-8-7 (15)						
1065		Note: occasional cobbles at 14'								
	15	SILTY SAND (SM), trace to some fine gravel, low plasticity, dark brown to brown, moist	SPT	5-4-3 (7)						
1060		SAND WITH GRAVEL (SP), considerable fine to coarse gravel, poorly graded, no to low plasticity, gray to red, slightly moist								
	20		SPT	21-50/5"			25	17	8	2
1055		Note: trace cobbles below 22.5'								
	25	CLAYEY GRAVEL WITH SAND (GC), some medium sand, low plasticity, reddish gray to brown, slightly moist	SPT	21-30-50/5"						
1050										
	30	GRAVEL WITH SAND (GP), considerable medium to coarse sand, poorly graded, nonplastic, light brown, slightly moist	SPT	31-50/5"						
1045										
	35									

(Continued Next Page)

BORING NUMBER NR-5

PAGE 2 OF 4

ethos ENGINEERING, LLC. Ethos Engineering, LLC

CLIENT T.Y. Lin International, Inc. **PROJECT NAME** MCDOT Northern Parkway (TT0372)
PROJECT NUMBER 2021015 **PROJECT LOCATION** 103rd Avenue to 91st Avenue, Maricopa County, AZ
DATE STARTED 2/22/2023 **COMPLETED** 2/23/2023 **BORING LOCATION** East Abutment
DRILLER Resilient **DRILLED BY** F. Esparza **GPS COORDINATES** 33.55104°N, -112.27461°E
DRILLING METHOD Tubex **GROUND ELEVATION** 1077 ft **BOREHOLE DEPTH** 116.2 ft
RIG TYPE / # CME-75 / 113 **GROUNDWATER DEPTH** ---
HAMMER TYPE Auto **HAMMER EFFICIENCY** 87 **LOGGED BY** M. Meza **CHECKED BY** J. Huston

ELEVATION (ft)	DEPTH (ft)	MATERIAL DESCRIPTION	SAMPLE TYPE	BLOW COUNTS (N VALUE)	DRY UNIT WT. (pcf)	MOISTURE CONTENT (%)	ATTERBERG LIMITS: LIQUID LIMIT	PLASTIC LIMIT	PLASTICITY INDEX	FINES CONTENT (%)
1040		GRAVEL WITH SAND (GP), considerable medium to coarse sand, poorly graded, nonplastic, light brown, slightly moist(continued)	SPT	7-31-29 (60)						
	40		SPT	13-17-34 (51)						
1035										
	45									
		GRAVELLY CLAY (CL), considerable gravel, trace fine sand, medium plasticity, brown, moist	SPT	22-8-6 (14)						
1030		CLAY WITH SAND (CL), trace fine gravel, some fine sand, medium plasticity, brown, moist								
	50	CLAYEY SAND (SC), trace fine gravel, low to medium plasticity, brown, moist	R	9-14	101	21	33	19	14	41
1025										
	55	SAND (SP), trace fine gravel, poorly graded, nonplastic, light brown, slightly moist	SPT	33-50/1"						
1020										
	60	SANDY CLAY (CL), trace fine gravel, considerable fine sand, low to medium plasticity, brown, moist	SPT	10-22-41 (63)						
1015										
	65	Note: firm at 65'	SPT	7-10-15 (25)						
1010										
	70									

(Continued Next Page)

BORING NUMBER NR-5

PAGE 3 OF 4

ethos ENGINEERING, LLC. Ethos Engineering, LLC

CLIENT T.Y. Lin International, Inc. **PROJECT NAME** MCDOT Northern Parkway (TT0372)
PROJECT NUMBER 2021015 **PROJECT LOCATION** 103rd Avenue to 91st Avenue, Maricopa County, AZ
DATE STARTED 2/22/2023 **COMPLETED** 2/23/2023 **BORING LOCATION** East Abutment
DRILLER Resilient **DRILLED BY** F. Esparza **GPS COORDINATES** 33.55104°N, -112.27461°E
DRILLING METHOD Tubex **GROUND ELEVATION** 1077 ft **BOREHOLE DEPTH** 116.2 ft
RIG TYPE / # CME-75 / 113 **GROUNDWATER DEPTH** ---
HAMMER TYPE Auto **HAMMER EFFICIENCY** 87 **LOGGED BY** M. Meza **CHECKED BY** J. Huston

ELEVATION (ft)	DEPTH (ft)	MATERIAL DESCRIPTION	SAMPLE TYPE	BLOW COUNTS (N VALUE)	DRY UNIT WT. (pcf)	MOISTURE CONTENT (%)	ATTERBERG LIMITS: LIQUID LIMIT	PLASTIC LIMIT	PLASTICITY INDEX	FINES CONTENT (%)
1005		SILTY, CLAYEY SAND WITH GRAVEL (SC-SM), some fine gravel, low plasticity, brown, moist	R	15-40	112	8				
	75									
1000		SANDY CLAY (CL), trace fine gravel, considerable fine sand, subangular, low plasticity, brown, moist	SPT	6-8-25 (33)						
		Note: increased gravel below 78'								
	80									
995			SPT	13-13-26 (39)						
	85	Note: occasional gravel below 85'	R	10-27	106	17				
990		SAND WITH GRAVEL (SP), considerable gravel, poorly graded, nonplastic, light brown, slightly moist								
	90	SILTY SAND (SM), trace fine gravel, low plasticity, brown, moist	SPT	21-50/1"						
985										
	95	SILTY GRAVEL WITH SAND (GM), considerable fine to medium sand, low plasticity, brown, moist	SPT	50/5"						
980										
	100	GRAVELLY CLAY (CL), considerable gravel, trace fine sand, low to medium plasticity, brown, moist	SPT	50/5"						
975										
	105									

(Continued Next Page)

BORING NUMBER NR-5

PAGE 4 OF 4

ethos ENGINEERING, LLC. Ethos Engineering, LLC

CLIENT T.Y. Lin International, Inc. **PROJECT NAME** MCDOT Northern Parkway (TT0372)
PROJECT NUMBER 2021015 **PROJECT LOCATION** 103rd Avenue to 91st Avenue, Maricopa County, AZ
DATE STARTED 2/22/2023 **COMPLETED** 2/23/2023 **BORING LOCATION** East Abutment
DRILLER Resilient **DRILLED BY** F. Esparza **GPS COORDINATES** 33.55104°N, -112.27461°E
DRILLING METHOD Tubex **GROUND ELEVATION** 1077 ft **BOREHOLE DEPTH** 116.2 ft
RIG TYPE / # CME-75 / 113 **GROUNDWATER DEPTH** ---
HAMMER TYPE Auto **HAMMER EFFICIENCY** 87 **LOGGED BY** M. Meza **CHECKED BY** J. Huston

ELEVATION (ft)	DEPTH (ft)	MATERIAL DESCRIPTION	SAMPLE TYPE	BLOW COUNTS (N VALUE)	DRY UNIT WT. (pcf)	MOISTURE CONTENT (%)	ATTERBERG LIMITS: LIQUID LIMIT	PLASTIC LIMIT	PLASTICITY INDEX	FINES CONTENT (%)
970		SAND (SP), trace fine gravel, poorly graded, nonplastic, light brown to brown, slightly moist	SPT	13-50/4"						
	110									
965		SILTY, CLAYEY SAND WITH GRAVEL (SC-SM), some fine gravel, low plasticity, brown, moist	SPT	50/5"						
	115									
		SANDY CLAY (CL), trace fine gravel, considerable fine sand, low plasticity, light brown to brown, moist	SPT	10-31-50/3"						

Bottom of borehole at 116.2 feet. Backfilled full depth with bentonite-slurry.

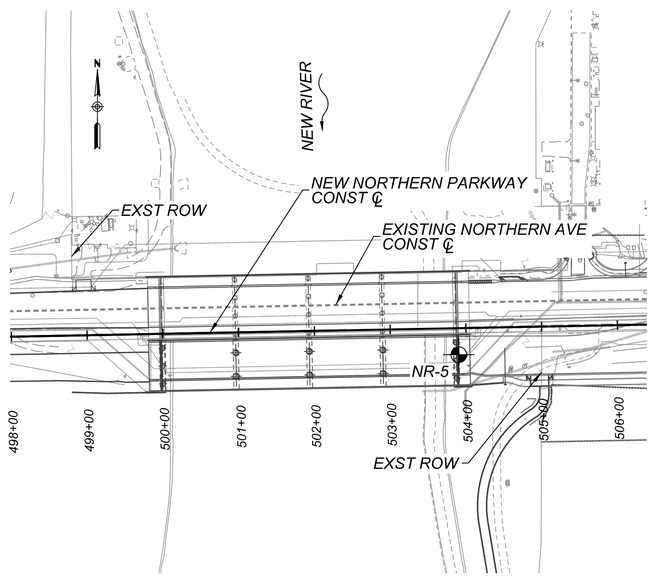

PLAN
Scale: 1"=100'

Contact Arizona 811 Two Working Days Before You Dig
Call 811 or Click Arizona811.com

NO.	REVISION	BY	DATE
3			
2			
1			

MARICOPA COUNTY

NORTHERN PARKWAY
103RD AVENUE TO 91ST AVENUE - PHASE 1
PROJECT NO. TT0372

	BY	DATE
DESIGNED	FJG	05/2026
DRAWN	HGM	05/2026
CHECKED	JRH	05/2026

Registered Professional Engineer (Civil) CERTIFICATE NO. 47791 JESSE R HUSTON Date Signed 05/06/26 ARIZONA, U.S.A.

ethos ENGINEERING, LLC. 9180 S Kyrene Rd Suite #104 Tempe, AZ 85284

FOUNDATION DATA SHEET 06

SHEET FD06

TRACS NO.

5/6/2026 9:48:10 AM

pw://tyli-pw.bentley.com:tyli-pw-01/Documents/Projects/221991.00_TT0372/600_CADD/05_Official/Dgn/Sheets/ETHOS/FDS/TT0372_FD_Foundation_Data_Sheet_06.dgn

F.H.W.A. REGION	STATE	PROJECT NO.	SHEET NO.	TOTAL SHEETS	RECORD DRAWING
9	AZ	TT0372	186	224	

CONTROL MEASURE INDEX SHEET (CMIS)

TO BE COMPLETED FOR PROJECTS WITH ONE (1) ACRE OR MORE OF SOIL/GROUND DISTURBANCE OUTSIDE OF JURISDICTIONAL WATERS OF THE U.S. (≥1 ACRE*)

I. PROJECT DESCRIPTION

A. Owner Name and Address:

Maricopa County Department of Transportation
2901 West Durango Street
Phoenix, Arizona 85009

B. Project TRACS Number: TT0372

C. Project Name/Location (be consistent with the plan set cover sheet): NORTHERN PARKWAY (PHASE 1), LOCATED BETWEEN 103RD AVENUE AND 99TH AVENUE.

City: Peoria County: Maricopa

Beginning Latitude (NAD 83): 33° 33' 05"

Beginning Longitude (NAD 83): 112° 16' 52"

Ending Latitude (NAD 83): 33° 33' 05"

Ending Longitude (NAD 83): 112° 16' 24"

To obtain the project latitude/longitude data, refer to the Flash Earth web link below (Bing Maps with labels):

http://www.flashearth.com/

D. Project Description: PHASE ONE IS EXPANDING NORTHERN PARKWAY BETWEEN 103RD AVE TO APPROXIMATELY 99TH AVE. NEW ROADWAY INFRASTRUCTURE, INCLUDING THE BRIDGE OVER NEW RIVER, WILL BE INSTALLED AS WELL AS NEW LANDSCAPE AND IRRIGATION SYSTEMS.

II. HYDROLOGIC INFORMATION

A. Percentage of the site that is impervious before and after construction:

Percentage before Construction: 49%

Percentage after Construction: 53%

B. Receiving Water(s), refer to the plan set cover sheet and the NHD Plus HR Availability Map Web Link below:

https://usgs.maps.arcgis.com/apps/MapTools/index.html?appid=41a5c2ca49bd4a83b239450e61022d53

(If unnamed, state as unnamed)

NEW RIVER

III. SOIL STABILIZATION MEASURES

☒ All disturbed soil, which will not be paved, riprapped or otherwise covered to prevent erosion, will be revegetated and/or landscaped in accordance with the project plans and specifications.

IV. MEASURES TO CONTROL STORMWATER AND AIR QUALITY

A. Temporary Stormwater and Air Quality Control Measures (CMs) / Best Management Practices (BMPs)

- ☐ Temporary Diversion Dikes
- ☐ Temporary Rock Check Dams
- ☒ Stabilized Construction Entrance/Exit Gravel Pad
- ☐ Soil Stabilizer for Wind Erosion and Dust Control
- ☒ Rock Inlet/Outlet Protection
- ☐ Sediment Control Berms
- ☐ Silt Fences
- ☒ Wattles (Excelsior/Straw/Compost)
- ☐ Excelsior Logs / Sediment Logs
- ☐ Erosion Control Mattings
- ☐ Seeding (Class II with final mulch cover)
- ☐ Gravelbag
- ☐ Catch Basin Temporary Fabric Filter
- ☒ Designated Washout Areas
- ☒ Protected Chemical and Material Storage Area
- ☒ Equipment Maintenance Procedures
- ☒ Others Describe: CURB INLET PROTECTION

B. Permanent and Post-construction Stormwater and Air Quality Control Measures (CMs) / Best ManagementPractices (BMPs):

- ☐ Crown Ditch/Dike
- ☒ Rock Protection
- ☒ Rock Riprap Channel Lining
- ☐ Sediment Basin
- ☐ Embankment Curb
- ☒ Spillways
- ☐ Downdrains
- ☐ Minibenching
- ☐ Solid Waste Management
- ☐ **Rock-filled Stormwater Infiltration CM/BMP as Infiltration Basin and/or Trench
- ☐ **Filtration Structures
- ☐ **Infiltration Basin and/or Trench
- ☐ **Retention and/or Detention Basins
- ☐ **Bioretention
- ☐ **Manufactured Treatment Devices
- ☐ Seeding established as a perennial vegetative cover with a density of 70% of the native background vegetative cover.
- ☒ Others Describe: ROCK MULCH AND/OR DECOMPOSED GRANITE, NEW PLANT MATERIAL, AND RESTORATION OF EXISTING LANDSCAPE AREAS.

Contact Arizona 811 Two Working Days Before You Dig
ARIZONA811 BLUE STAKE, INC.
Call 811 or Click Arizona811.com

NO.	REVISION	BY	DATE
3			
2			
1			

MARICOPA COUNTY

NORTHERN PARKWAY
103RD AVENUE TO 91ST AVENUE - PHASE 1
PROJECT NO. TT0372

Registered Landscape Architect CERTIFICATE NO. 34191 J. SETH PLACKO Date Signed 5/6/26 ARIZONA U.S.A.

	BY	DATE
DESIGNED	DM/EN/AL	5/6/2026
DRAWN	J2CAD	5/6/2026
CHECKED	SP	5/6/2026

J2 Design

EROSION CONTROL
CONTROL MEASURE INDEX SHEET

SHEET ED01

TRACS NO.

c:\bms\tyli-pw\splacko__j2design\0573074\TT0372_SS_ErosionControl_Index_01.dgn OpenRoads_Imperial 4:34:24 PM 5/6/2026 MCDOT_TYLIN_PRINT.tbl TYLI_GN_bwpdf.pltcfg

F.H.W.A. REGION	STATE	PROJECT NO.	SHEET NO.	TOTAL SHEETS	RECORD DRAWING
9	AZ	TT0372	187	224	

EROSION CONTROL TYPE INSTALLATION & QUANTITY

LOCATION	Sediment Wattle Slope Protection (LF) 9" SW-9 E1	Sediment Wattle Slope Protection (LF) 20" SW-20 E1	Storm Drain Protection (20" Sediment Wattle) (LF) SD E2	Curb Inlet Protection (LF) IP E3	Headwall Rock Protection (Gradation 'C') (CY) HP E4	Construction Entrance (Gradation 'C') (SY) CE E5	QUANTITIES: 9" Sediment Wattle Slope Protection (LF)	QUANTITIES: 20" Sediment Wattle Slope Protection (LF)	QUANTITIES: Storm Drain Protection (20" Sediment Wattle) (LF)	QUANTITIES: Curb Inlet Protection (LF)	QUANTITIES: Headwall Rock Protection (Gradation 'C') (CY)	QUANTITIES: Construction Entrance (Gradation 'C') (SY)	REMARKS
Northern Avenue Cst. Centerline													
Sht. EC01 - Sta 481+00 to Sta 492+80	--	2,506	--	240	22	250	--	2,506	--	240	22	250	
Sht. EC02 - Sta 492+80 to Sta 503+92	123	1,551	56	185	14	250	123	1,551	56	185	14	250	
Sht. EC03 - Sta 503+92 to Sta 109+00	702	--	--	--	--	250	702	--	--	--	--	250	
99th Avenue Cst. Centerline													
Sht. EC04 - Sta 13+00 to Sta 23+00	1,330	982	--	--	3	250	1,330	982	--	--	3	250	
							2,155	5,039	56	425	39	1,000	

SW-9 - 9" Sediment Wattle Slope Protection
SW-20 - 20" Sediment Wattle Slope Protection
SD - Sediment Wattle At Storm Drain
IP - Curb Inlet Protection
RP - Rock Protection At Storm Drain
WP - Retaining Wall Rock Protection
HP - Headwall Rock Protection
CE - Construction Entrance

SD / E2 Reference letters 'SD' correspond to the type of installation. 'E2' corresponds to the plan detail number.

NOTES:
1. The placement of all Erosion Control Devices listed above may be subject to change and may be adjusted by the Engineer.
2. The contractor shall monitor/maintain all "Control Measures" during any shutdown period.
3. Quantities represent both permanent and temporary "Control Measure".

Contact Arizona 811 Two Working Days Before You Dig
Call 811 or Click Arizona811.com

NO.	REVISION	BY	DATE
3			
2			
1			

MARICOPA COUNTY

NORTHERN PARKWAY
103RD AVENUE TO 91ST AVENUE - PHASE 1
PROJECT NO. TT0372

	BY	DATE
DESIGNED	DM/EN/AL	5/6/2026
DRAWN	J2CAD	5/6/2026
CHECKED	SP	5/6/2026

Registered Landscape Architect CERTIFICATE NO. 34191 J. SETH PLACKO Date Signed 5/6/26 Expires 12/31/27 Arizona U.S.A.

J2 Design

EROSION CONTROL SUMMARY

SHEET ED02

TRACS NO.

c:\bmstyli-pw\splacko__j2design\057307411TT0372_SS_ErosionControl_Summary_01.dgn
OpenRoads_Imperial 4:34:34 PM 5/6/2026 MCDOT_TYLIN_PRINT.tbl TYLI_GN_bwpdf.pltcfg

F.H.W.A. REGION	STATE	PROJECT NO.	SHEET NO.	TOTAL SHEETS	RECORD DRAWING
9	AZ	TT0372	188	224	

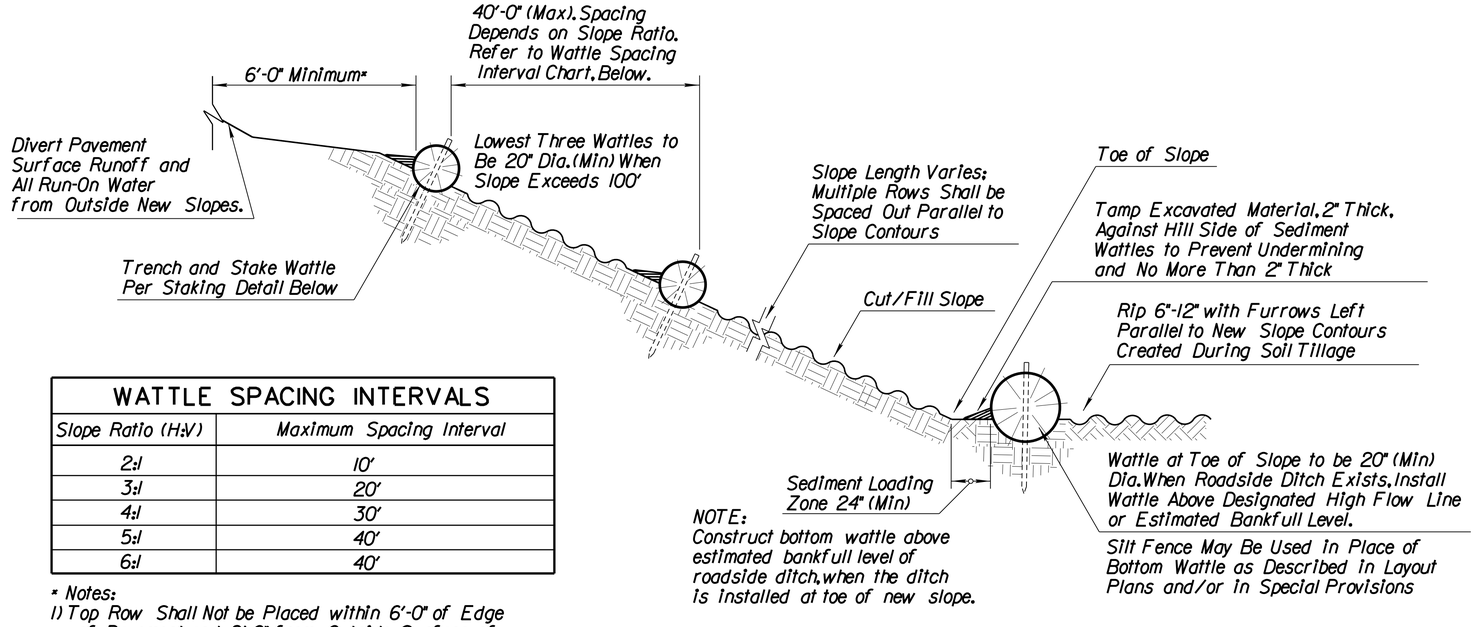

NOTE:
Construct bottom wattle above estimated bankfull level of roadside ditch, when the ditch is installed at toe of new slope.

SECTION (NTS)

WATTLE SPACING INTERVALS	
Slope Ratio (H:V)	Maximum Spacing Interval
2:1	10'
3:1	20'
4:1	30'
5:1	40'
6:1	40'

* Notes:
1) Top Row Shall Not be Placed within 6'-0" of Edge of Pavement and 9'-0" from Outside Surface of Barrier.
2) For erosive soils, place rows of wattles closer together.
3) For soils with low erosive potential, place rows of wattles further apart.

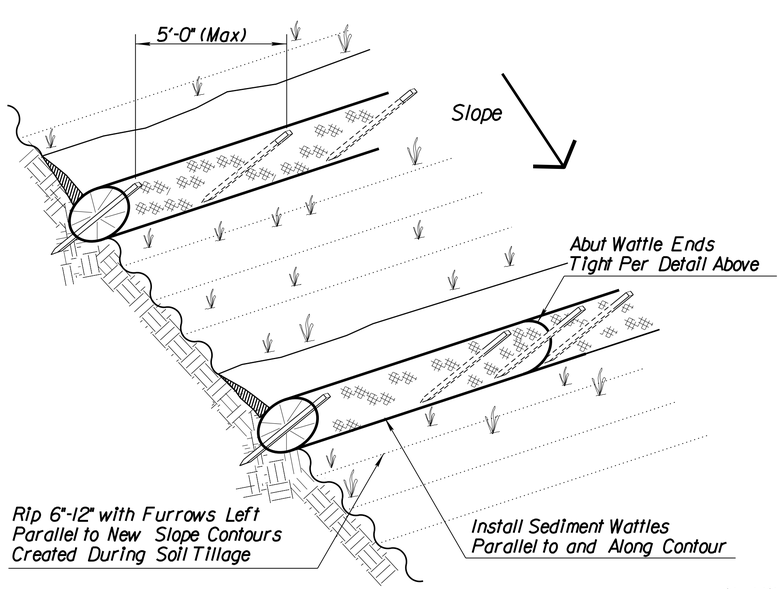

SEDIMENT WATTLE LAYOUT (NTS)

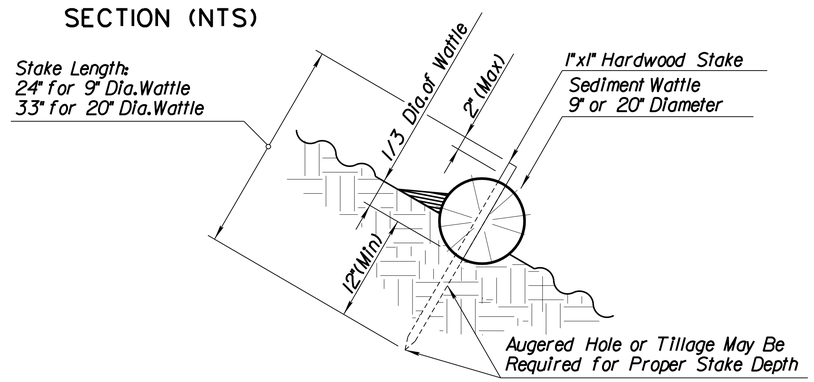

SEDIMENT WATTLE STAKING DETAIL (NTS)

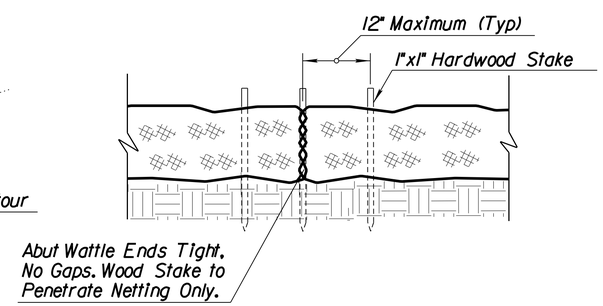

SEDIMENT WATTLE OVERLAP (NTS)

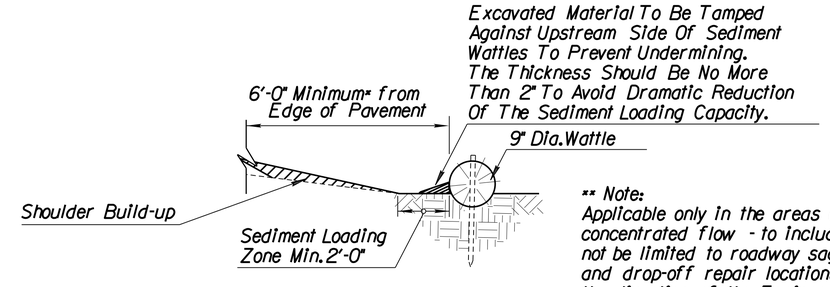

NEW SHOULDER BUILDUP ** PROTECTION SECTION (NTS)

** Note:
Applicable only in the areas of concentrated flow - to include but not be limited to roadway sag spots and drop-off repair locations as per the direction of the Engineer.

NOTES:

1. Install Sediment Wattles as slopes are constructed to grade or as directed by the Engineer. Select, install and maintain in conformance with manufacturers' specifications to meet site conditions for slope protection and in accordance with good engineering practices. No Sediment Wattles shall be installed in urban freeway medians, nor where cable barrier systems are employed.
2. Sediment Wattles shall be in continuous contact with trench bottom and sides. Do not overlap wattle ends on top of each other. A 20" Dia. wattle may be made from 2-3 rolled excelsior or straw blankets.
3. Butt adjoining wattles tightly against each other. Drive the first end stake of the second wattle at an angle toward the first wattle to help abut them tightly.
4. Repair any rills or gullies promptly. Make field adjustments and corrections of Wattle BMP immediately if it is causing flooding, erosion, and/or affecting roadway safety.
5. Construction of cut slopes 2:1 and steeper in soil and rock materials that can be ripped shall be constructed, whenever possible, by Minibenching. Refer to Slope Minibenching BMP Detail.
6. Loosening surface soil is not required where Minibenches are used. For seeded areas, tillage shall be performed to form minor ridges and furrows parallel to new slope contours and as specified in Section 805 of the Standard Specifications and these special provisions.
7. Divert and direct run-on water from outside of the slopes to the spillways and/or rock riprap/rock mulch. Diversion dikes and/or ditches are necessary on natural undisturbed slopes beyond the top limits of new slopes to divert run-on water.
8. Installation and maintenance of Sediment Wattle BMPs shall not negatively impact traffic safety, nor the designed function of roadway or bridge drainage facilities.
9. Install and maintain Sediment Wattle BMPs to carry the stormwater of at least 2-year, 24-hour events.
10. The Sediment Wattle BMP's pay/bid item shall include all materials used for this BMP: all ground preparation, furnishing, installing, maintenance, final removal, and disposal of this temporary BMP, as well as returning the area to an acceptable condition as approved by the Engineer.
11. Refer to Standard Specification Section 810-2.06(C) for Sediment Wattle material specifications.
12. Make field adjustments and corrections to ensure NO sensitive biological resources (native species/habitats) will be adversely impacted.

SW-X
E1

DETAIL E1 NTS

SEDIMENT WATTLE SLOPE PROTECTION

Contact Arizona 811 Two Working Days Before You Dig
Call 811 or Click Arizona811.com

NO.	REVISION	BY	DATE
3			
2			
1			

MARICOPA COUNTY

NORTHERN PARKWAY
103RD AVENUE TO 91ST AVENUE - PHASE 1
PROJECT NO. TT0372

Registered Landscape Architect CERTIFICATE NO. 34191 J. SETH PLACKO Date Signed 05/06/26 ARIZONA, U.S.A.

	BY	DATE
DESIGNED	DM/EN/AL	5/6/2026
DRAWN	J2CAD	5/6/2026
CHECKED	SP	5/6/2026

J2 Design

EROSION CONTROL DETAILS
DETAIL E1

SHEET
ED03

TRACS NO.

TYLI_GN_bwpdf.pltcfg
MCDOT_TYLIN_PRINT.tbl
5/6/2026 4:34:40 PM
OpenRoads_Imperial
c:\bmstyli-pw\placko__j2design\d0573074\TT0372_SD_ErosionControl_Detail_01.dgn

F.H.W.A. REGION	STATE	PROJECT NO.	SHEET NO.	TOTAL SHEETS	RECORD DRAWING
9	AZ	TT0372	189	224	

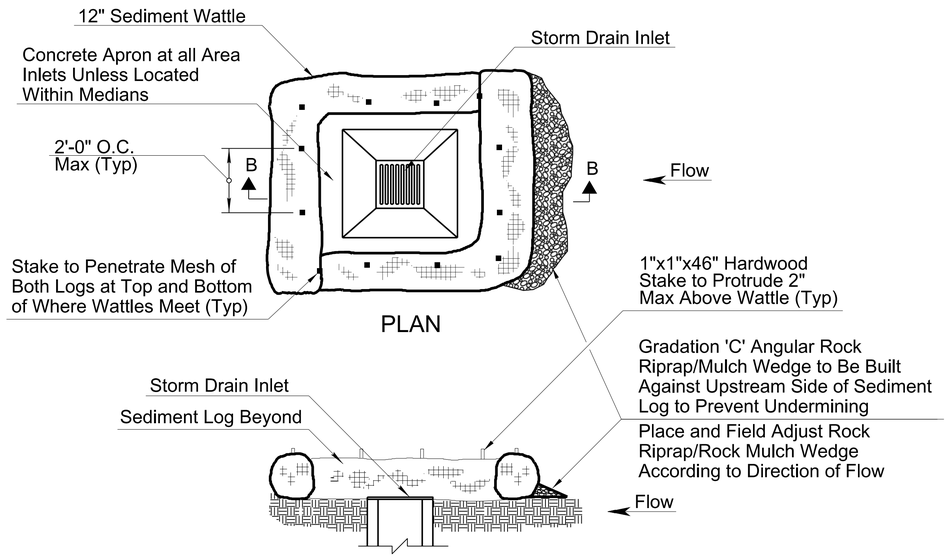

SEDIMENT WATTLE AT STORM DRAIN
SECTION B-B (NTS)

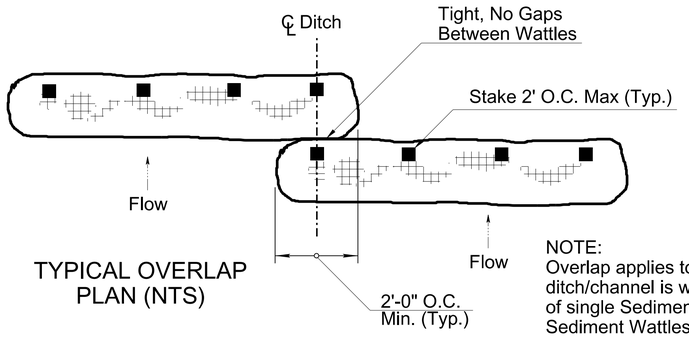

TYPICAL OVERLAP
PLAN (NTS)

NOTE:
Overlap applies to situations where ditch/channel is wider than length of single Sediment Wattles. Two or multiple Sediment Wattles may be necessary.

NOTES:
1. Sediment Wattles shall not be installed in the urban freeway medians, nor where cable barrier systems are employed.
2. Locate Sediment Wattles as indicated in plans, SWPPP or as directed by the Engineer.
3. Select, install and maintain Wattles per manufacturers' specifications and good engineering practices.
4. Lay sediment wattles across prepared ditch or channel. Trenching or burial of Sediment Wattles is not required. The close, continuous contact between the bottom of the Wattle and the ground is mandatory. The Wattles shall be installed in the ditch, swale or channel bottom perpendicular to the flow of water as shown on detail this sheet.
5. Stake Wattles as shown. Stakes shall be placed through downstream side only as shown.
6. DO NOT drive stakes through center of the wattle. Stakes must be driven into the ground as shown.
7. Ensure that no gaps exist between soil and bottom of Sediment Wattle. Repair any rills or undercuts promptly.
8. Placement of Sediment Wattles shall be evaluated by the Engineer in rocky soil conditions.
9. Remove Sediment Wattle BMPs within the ditches/channels and around the storm drain inlets as per the Direction of the Engineer or as soon as practicable upon stabilization of the disturbed area construction.
10. Dispose of Sediment Wattles and trapped sediment material and fill trench created by Sediment Wattle.
11. The installation and maintenance of Sediment Wattle BMPs shall not negatively impact traffic safety, nor the designed function of roadway or bridge drainage facilities. Sediment Wattles shall be installed and maintained to carry the stormwater of at least 2-year, 24-hour events.
12. Field adjust and correct Sediment Wattle BMP immediately if it is causing flooding, erosion, and/or affecting roadway safety.
13. The Sediment Wattle BMP's pay/bid item shall include all materials used for this BMP: all ground preparation, furnishing, installing, maintenance, final removal, and disposal, as well as returning the area to an acceptable condition as approved by the Engineer.

SD E2 DETAIL E2 NTS

SEDIMENT WATTLE AT
STORM DRAIN AREA INLETS-
TEMPORARY PROTECTION

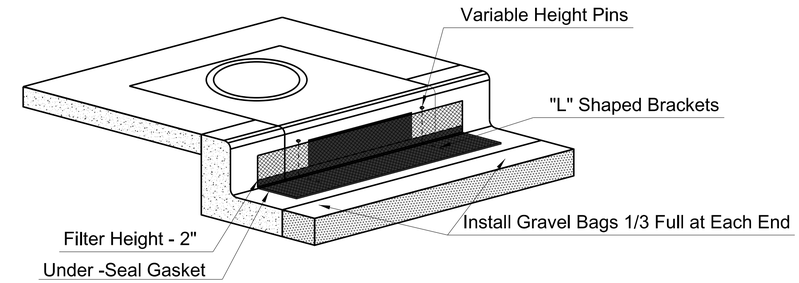

CONSTRUCTION DETAILS
* Minimum 2 Integrated "L" Brackets
* Minimum 2 Variable-Height Pinsfor Curb
* Filter Height = 2 Inches
* UV Resistant HDPE Outer Jacket
* Under-Seal Gasket to Prevent Underflow
* Curb Inlet Guard (CIG) Height = 8 Inches (Min)
* Curb Inlet Guard (CIG) Length = 6.25 Feet

Inlet Size	# of CIG Segments
5'	1
10'	2
15'	3
20'	4
25'	5
30'	6

INSTALLATION DETAILS
Placement:
* Place CIG tightly against drain opening with metal variable Height Pins at Top.
* Change Height for High Openings:
* Extend Variable Height Pins Upward if Necessary.
* Interconnecting for Long Curb Openings:
* Overlap segments so the bottom gasket provides a continuous seal (one side has a cut out). Each 6.25 foot segment fits a 5 foot opening or smaller. Use 2 segments for 8 to 10 feet. Use 3 segments for 15 feet, etc.

Anchoring:
* Install gravel bags at each end and at overlaps Use 1/3 full gravel bags for low profile and traffic avoidance. Use clean gravel at drain inlets- not sand. Select bags with long term UV exposure and toughness for resistance to traffic. Where not possible to install gravel bags due to traffic proximity, it is acceptable to anchor bags with concrete anchors or masonry nails, onto each end. Anchor curb inlet guard so that water cannot flow behind it. Secure with 1 inch washers.

IP E3 DETAIL E3 NTS

CURB INLET PROTECTION
TEMPORARY PROTECTION

Contact Arizona 811 Two Working Days Before You Dig
Call 811 or Click Arizona811.com

NO.	REVISION	BY	DATE
3			
2			
1			

MARICOPA COUNTY

NORTHERN PARKWAY
103RD AVENUE TO 91ST AVENUE - PHASE 1
PROJECT NO. TT0372

	BY	DATE
DESIGNED	DM/EN/AL	5/6/2026
DRAWN	J2CAD	5/6/2026
CHECKED	SP	5/6/2026

Registered Landscape Architect CERTIFICATE NO. 34191 J. SETH PLACKO Date Signed 05/06/26 ARIZONA U.S.A.

J2 Design

EROSION CONTROL DETAILS
DETAILS E2 & E3

SHEET ED04

TRACS NO.

c:\bmstyli-pw\splacko__j2design\d0573074\TT0372_SD_ErosionControl_Detail_02.dgn
OpenRoads_Imperial 4:34:48 PM 5/6/2026 MCDOT_TYLIN_PRINT.tbl TYLI_GN_bwpdf.pltcfg

F.H.W.A. REGION	STATE	PROJECT NO.	SHEET NO.	TOTAL SHEETS	RECORD DRAWING
9	AZ	TT0372	190	224	

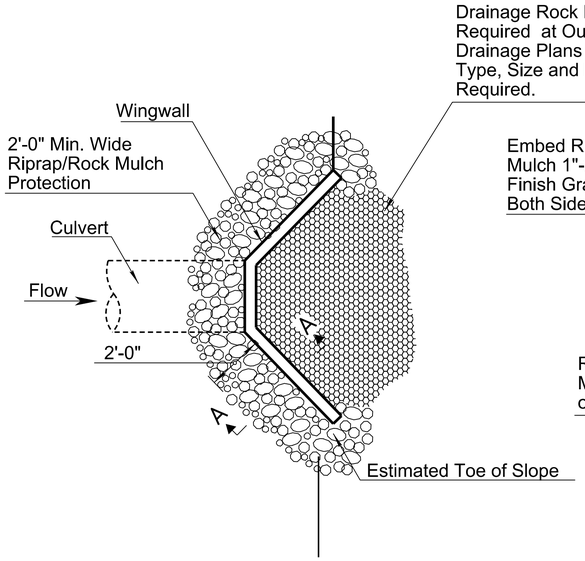

ANGLED HEADWALL
PLAN VIEW (NTS)

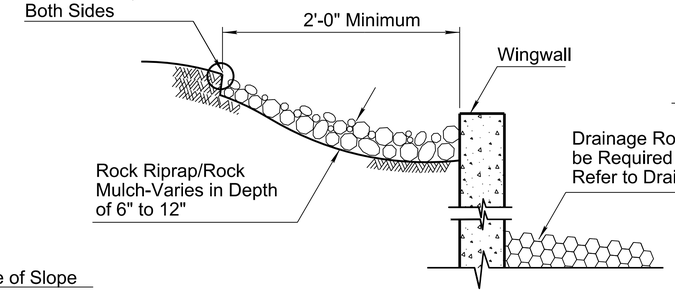

WINGWALL
SECTION A-A (NTS)

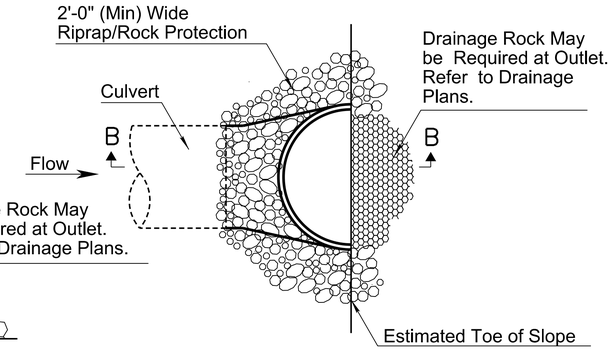

FLARED END
PLAN VIEW (NTS)

NOTES:
1. Rock Riprap/Rock Much shall be angular shaped, crushed rock materials.
2. Rock Riprap/Rock Mulch within the traffic Clear Zone shall conform to the requirements of Section 810-2.03 Sieve Size Gradation A and/or Gradation C, and Section 913 of the Standard Specifications.
3. Imbed rock within traffic recovery area/clear zone into the finished grade so that any portion of the rock above the grade will be less than 4" in height.
4. The installation and maintenance of Rock Protection BMPs shall not negatively impact traffic safety, nor the designed function of roadway or bridge drainage facilities. Rock Protection BMPs shall be installed and maintained to carry the stormwater of at least 2-year, 24-hour events.
5. Field adjust and correct Rock Protection BMP immediately if it is causing flooding, erosion, and/or affecting roadway safety.
6. The Rock Protection BMP's pay/bid item shall include all materials used for this BMP: all ground preparation, furnishing, installing, maintaining as well as returning the area to an acceptable condition as approved by the Engineer.

HP
E6

DETAIL E4 NTS

HEADWALL ROCK PROTECTION
PERMENANT PROTECTION

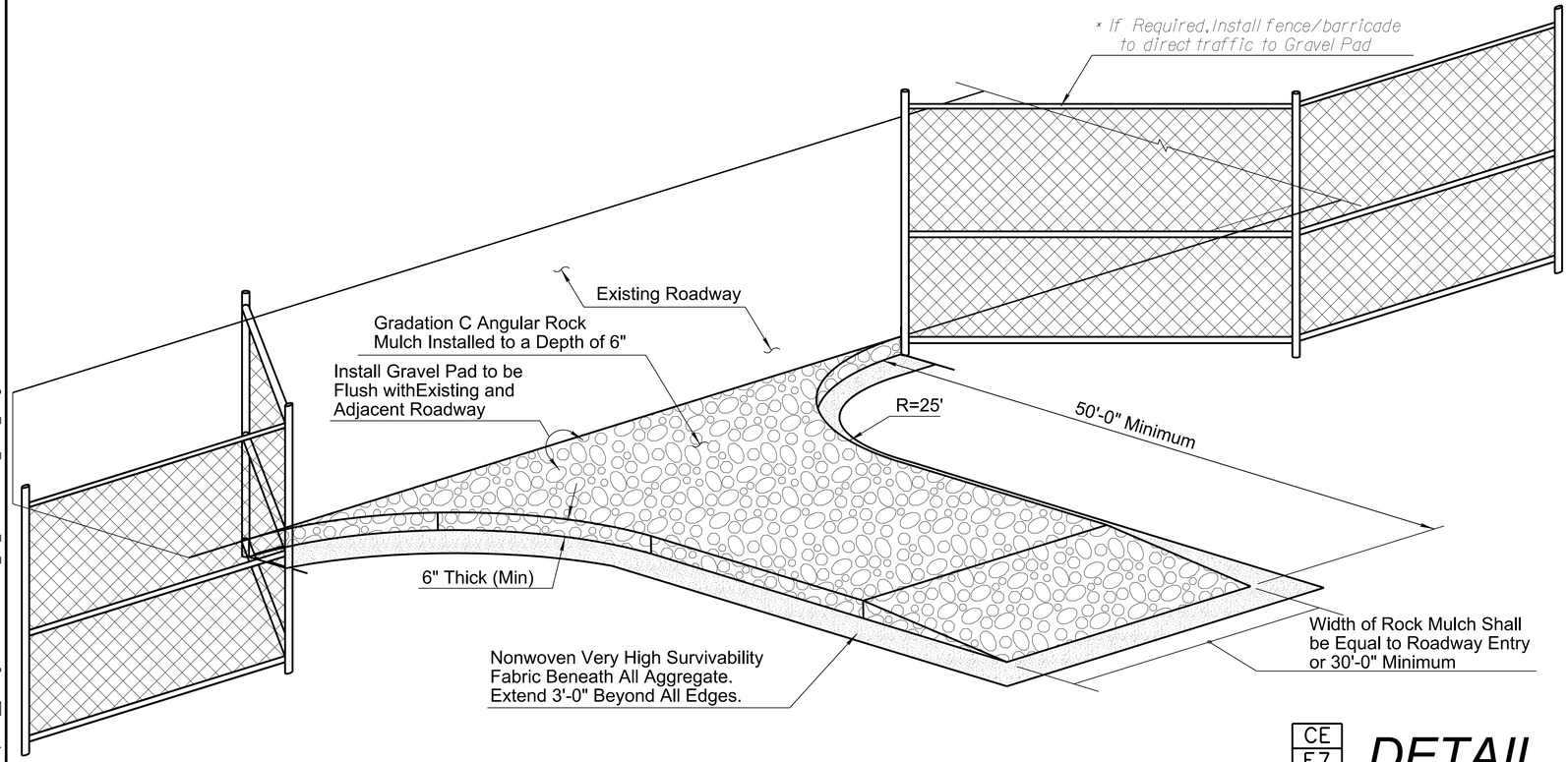

BIRD'S EYE VIEW (NTS)

NOTES:
1. Install Stabilized Construction Entrance/Exit Gravel Pad BMP for traffic entering or exiting a construction site where sedimentation, clay, silt or other pollutants can be tracked onto public roads and/or adjacent water bodies, as approved by the Engineer. It may also be applied for construction entrance/exit wind erosion/dust control, as approved by the Engineer.
2. Locate new Construction Entrance(s)/Exit(s) at appropriate project entrance/ exit points as determined in field with the approval of the Engineer. Relocate Stabilized Construction Entrance/Exit Gravel Pad BMP as needed as project progresses. Replace Rock Mulch materials in drive paths when dirt or mud accumulates.
3. Nonwoven Very High Survivability Fabric shall conform to the standards of Sub-section 1014-4.04 of the Standard Specifications.
4. Rock Mulch materials shall be fractured/crushed rocks in angular shape and as defined in the Sub-section 810-2.03 of the Standard Specifications. Natural river-run materials, especially rounded natural river rocks are not acceptable.
5. Field adjust and correct Construction Entrance/Exit Gravel Pad BMP immediately if it is causing flooding and/or affecting roadway safety.
6. When paid separately, the Stabilized Construction Entrance/Exit Gravel Pad BMP's pay/bid item shall include all materials used for this BMP: all ground preparation, furnishing, installing, final removal, and disposal of this temporary BMP, as well as returning the area to an acceptable condition as approved by the Engineer.
7. * Fence / barricade pay / bid item shall not be included as a component of the Stabilized Construction Entrance / Exit Gravel Pad BMP pay / bid item.

CE
E7

DETAIL E5 NTS

CONSTRUCTION ENTRANCE

NO.	REVISION	BY	DATE
3			
2			
1			

MARICOPA COUNTY

NORTHERN PARKWAY
103RD AVENUE TO 91ST AVENUE - PHASE 1
PROJECT NO. TT0372

	BY	DATE
DESIGNED	DM/EN/AL	5/6/2026
DRAWN	J2CAD	5/6/2026
CHECKED	SP	5/6/2026

Registered Landscape Architect CERTIFICATE NO. 34191 J. SETH PLACKO Date Signed 5/6/26 ARIZONA U.S.A.

J2 Design

EROSION CONTROL DETAILS
DETAILS E6 & E7

SHEET
ED05

TRACS NO.

Contact Arizona 811 Two Working Days Before You Dig
ARIZONA811 BLUE STAKE, INC.
Call 811 or Click Arizona811.com

TYLI_GN_bwpdf.pltcfg
MCDOT_TYLIN_PRINT.tbl
4:34:54 PM 5/6/2026
OpenRoads_Imperial
c:\bmstyli-pw\placko__j2design\0573074\TT0372_SD_ErosionControl_Detail_03.dgn

F.H.W.A. REGION	STATE	PROJECT NO.	SHEET NO.	TOTAL SHEETS	RECORD DRAWING
9	AZ	TT0372	191	224	

EROSION CONTROL

Erosion Control Method

IP / E3

SW9	=	9" Sediment Wattle
SW20	=	20" Sediment Wattle
SD	=	Storm Drain Inlet
IP	=	Curb Inlet Protection
RP	=	Rock Protection
WP	=	Retaining Wall Rock Protection
HP	=	Headwall Rock Protection
CE	=	Construction Entrance

Detail Number Reference

NOTES:
1. Contractor shall monitor/maintain all Control Measures during shutdown periods.

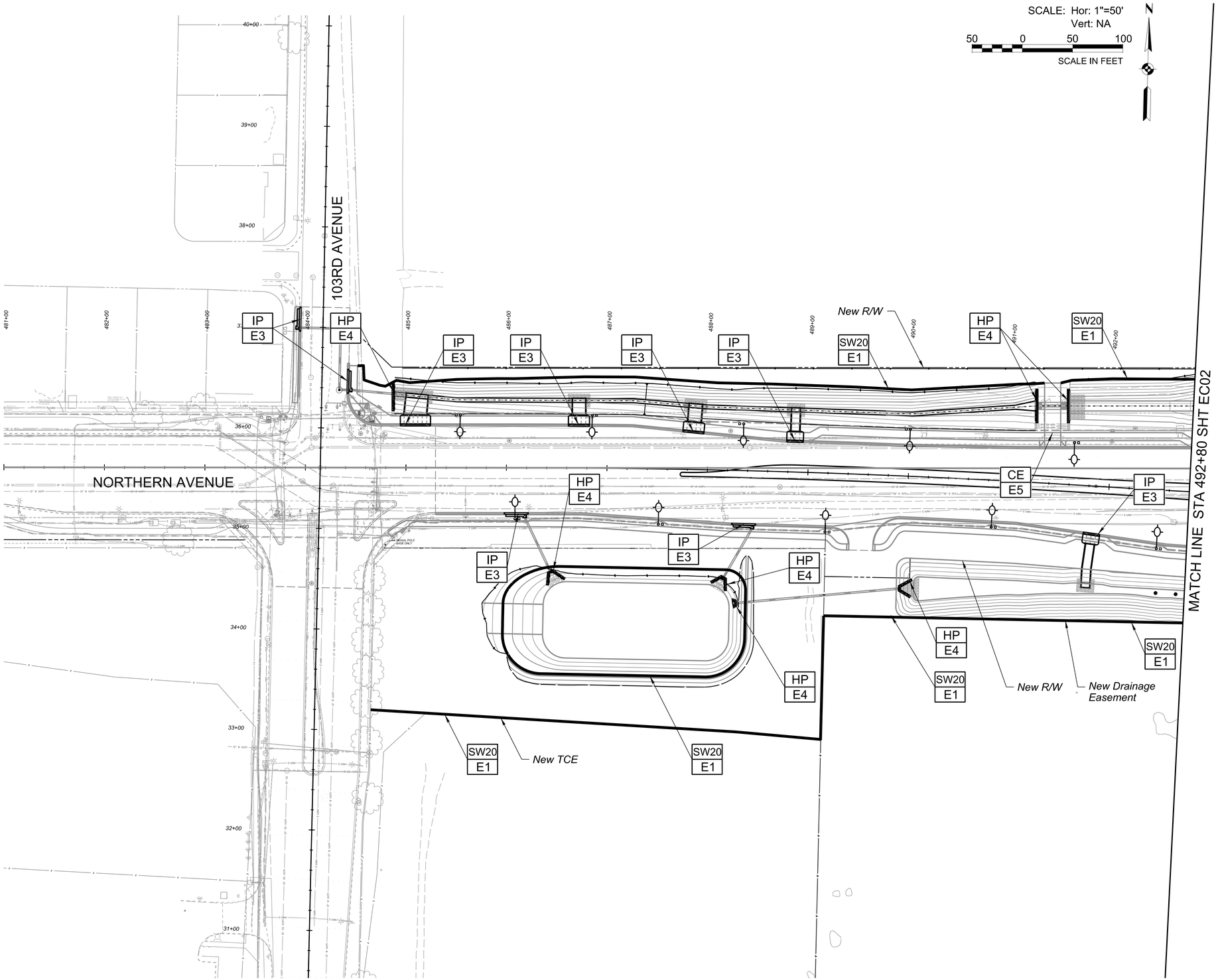

Contact Arizona 811 Two Working Days Before You Dig
Call 811 or Click Arizona811.com

NO.	REVISION	BY	DATE
3			
2			
1			

MARICOPA COUNTY

NORTHERN PARKWAY
103RD AVENUE TO 91ST AVENUE - PHASE 1
PROJECT NO. TT0372

Registered Landscape Architect
CERTIFICATE NO.
34191
J. SETH PLACKO
Date Signed 05/06/26
ARIZONA U.S.A.

	BY	DATE
DESIGNED	DM/EN/AL	5/6/2026
DRAWN	J2CAD	5/6/2026
CHECKED	SP	5/6/2026

J2 Design

NORTHERN AVENUE - EROSION CONTROL
PLAN STA 481+00 TO 492+80

SHEET EC01

TRACS NO.

c:\bmstlyli-pw\splacko__j2design\d0573074\TT0372_SC_ErosionControl_Plan_01.dgn
OpenRoads_Imperial 4:35:05 PM 5/6/2026 MCDOT_TYLIN_PRINT.tbl TYLI_GN_bwpdf.pltcfg

F.H.W.A. REGION	STATE	PROJECT NO.	SHEET NO.	TOTAL SHEETS	RECORD DRAWING
9	AZ	TT0372	192	224	

EROSION CONTROL

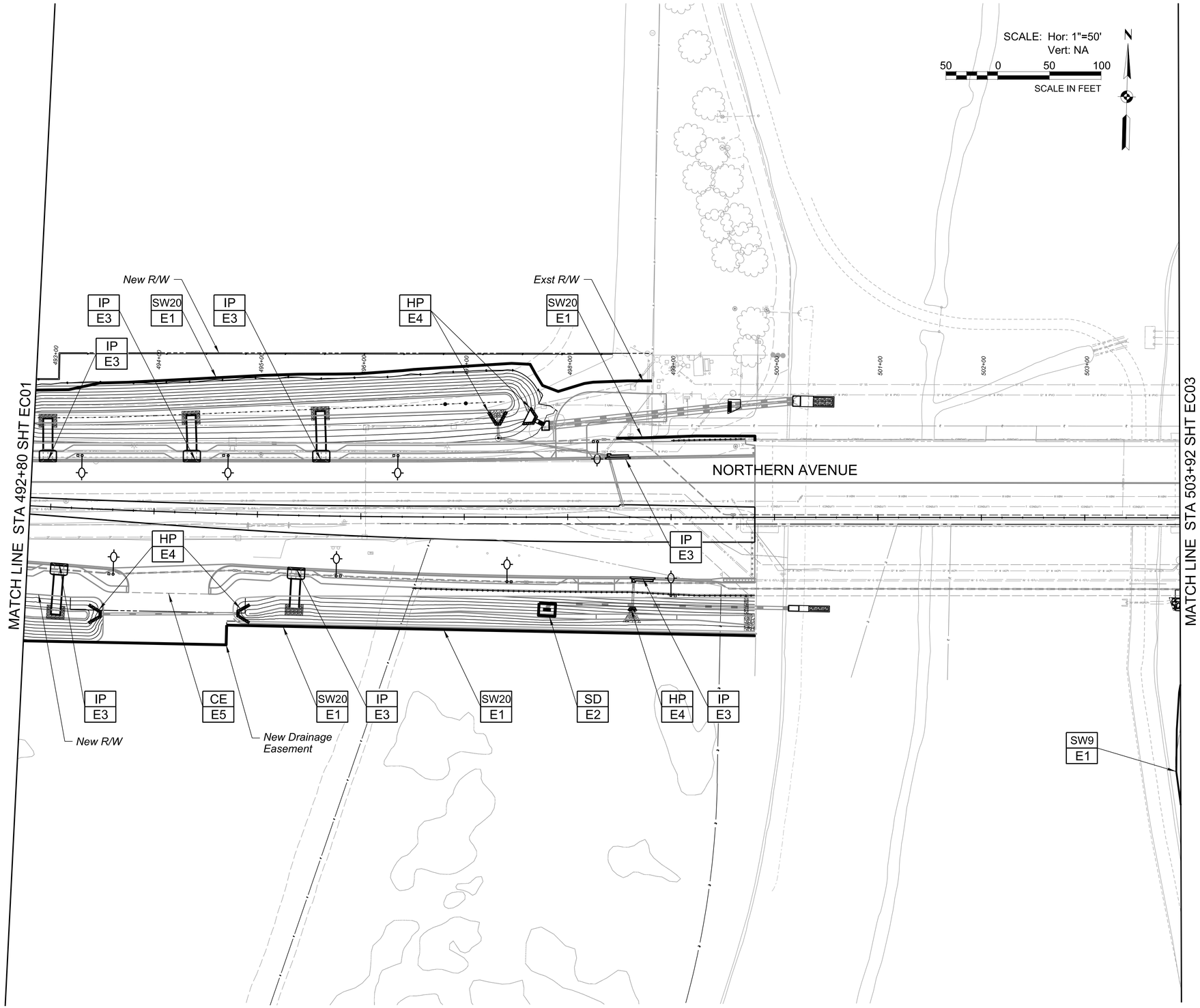

Erosion Control Method

SW9	=	9" Sediment Wattle
SW20	=	20" Sediment Wattle
SD	=	Storm Drain Inlet
IP	=	Curb Inlet Protection
RP	=	Rock Protection
WP	=	Retaining Wall Rock Protection
HP	=	Headwall Rock Protection
CE	=	Construction Entrance

IP / E3 — *Detail Number Reference*

NOTES:
1. Contractor shall monitor/maintain all Control Measures during shutdown periods.

Contact Arizona 811 Two Working Days Before You Dig
Call 811 or Click Arizona811.com

NO.	REVISION	BY	DATE
3			
2			
1			

MARICOPA COUNTY

NORTHERN PARKWAY
103RD AVENUE TO 91ST AVENUE - PHASE 1
PROJECT NO. TT0372

	BY	DATE
DESIGNED	DM/EN/AL	5/6/2026
DRAWN	J2CAD	5/6/2026
CHECKED	SP	5/6/2026

Registered Landscape Architect CERTIFICATE NO. 34191 J. SETH PLACKO Date Signed 05/06/26 ARIZONA U.S.A.

J2 Design

NORTHERN AVENUE - EROSION CONTROL
PLAN STA 492+80 TO 503+92

SHEET EC02

TRACS NO.

c:\bmstyli-pw\splacko__j2design\0573074\TT0372_SC_ErosionControl_Plan_02.dgn
OpenRoads_Imperial 4:35:16 PM 5/6/2026 MCDOT_TYLIN_PRINT.tbl TYLI_GN_bwpdf.pltcfg

F.H.W.A. REGION	STATE	PROJECT NO.	SHEET NO.	TOTAL SHEETS	RECORD DRAWING
9	AZ	TT0372	193	224	

EROSION CONTROL

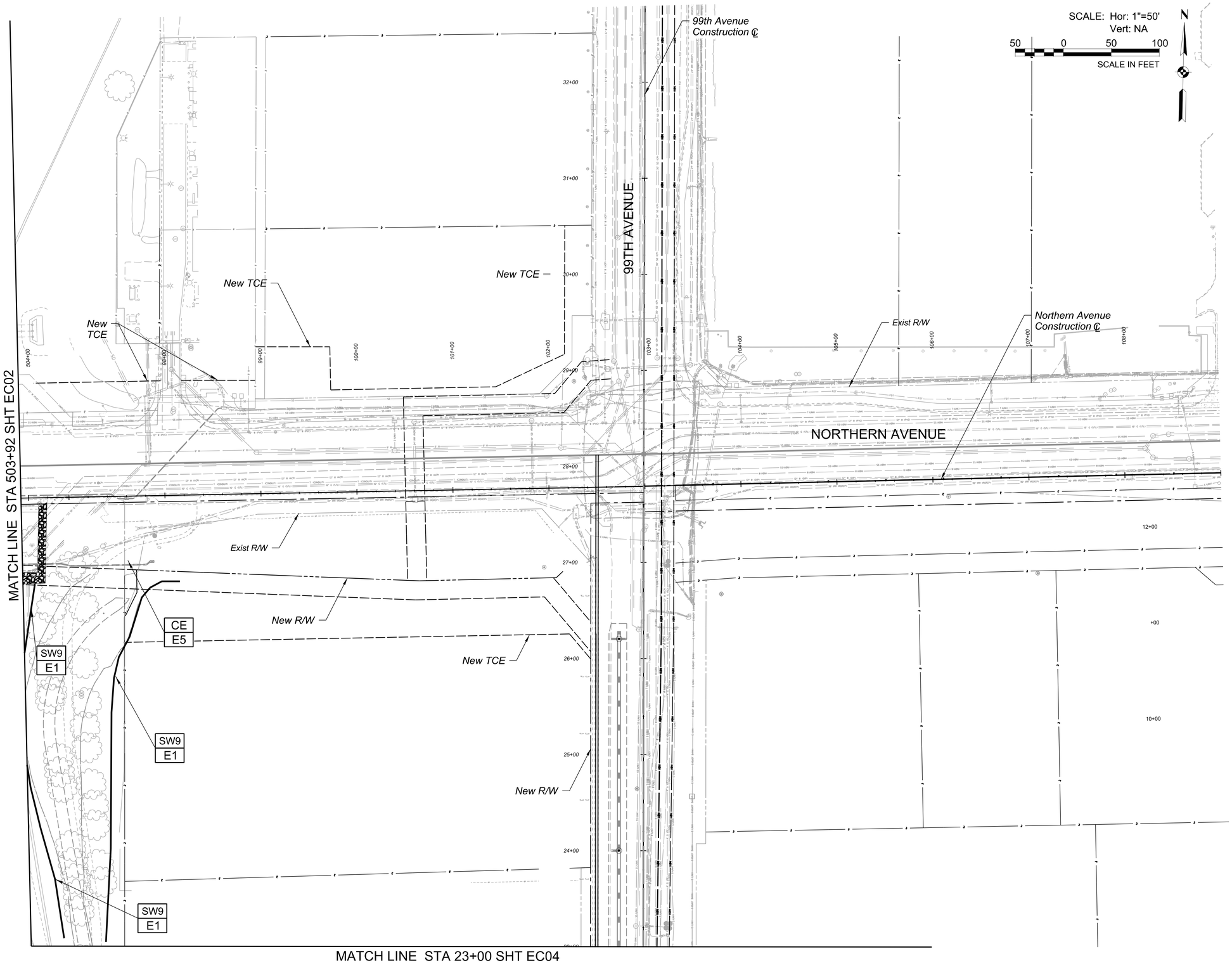

Erosion Control Method

IP
E3

SW9	=	9" Sediment Wattle
SW20	=	20" Sediment Wattle
SD	=	Storm Drain Inlet
IP	=	Curb Inlet Protection
RP	=	Rock Protection
WP	=	Retaining Wall Rock Protection
HP	=	Headwall Rock Protection
CE	=	Construction Entrance

Detail Number Reference

NOTES:
1. Contractor shall monitor/maintain all Control Measures during shutdown periods.

Contact Arizona 811 Two Working Days Before You Dig
Call 811 or Click Arizona811.com

NO.	REVISION	BY	DATE
3			
2			
1			

MARICOPA COUNTY

NORTHERN PARKWAY
103RD AVENUE TO 91ST AVENUE - PHASE 1
PROJECT NO. TT0372

Registered Landscape Architect
CERTIFICATE NO.
34191
J. SETH
PLACKO
Date Signed 05/06/26
Arizona U.S.A.

	BY	DATE
DESIGNED	DM/EN/AL	5/6/2026
DRAWN	J2CAD	5/6/2026
CHECKED	SP	5/6/2026

J2 Design

NORTHERN AVENUE - EROSION CONTROL
PLAN STA 503+92 TO 109+00

SHEET EC03

TRACS NO.

c:\bmstyli-pw\splacko__j2\designld\0573074\TT0372_SC_ErosionControl_Plan_03.dgn
OpenRoads_Imperial 4:35:27 PM 5/6/2026 MCDOT_TYLIN_PRINT.tbl TYLI_GN_bwpdf.pltcfg

F.H.W.A. REGION	STATE	PROJECT NO.	SHEET NO.	TOTAL SHEETS	RECORD DRAWING
9	AZ	TT0372	194	224	

EROSION CONTROL

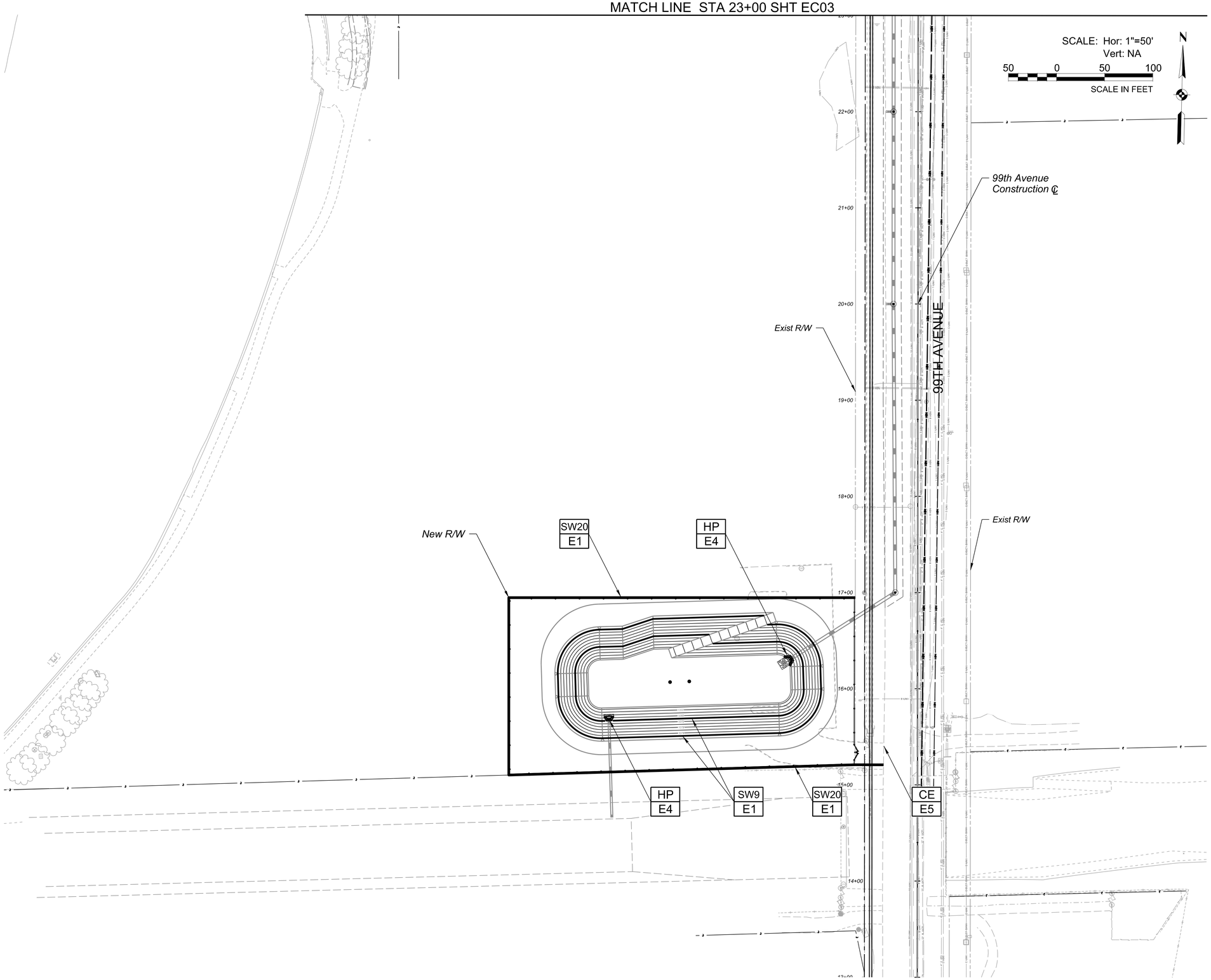

Erosion Control Method

IP
E3

SW9	=	9" Sediment Wattle
SW20	=	20" Sediment Wattle
SD	=	Storm Drain Inlet
IP	=	Curb Inlet Protection
RP	=	Rock Protection
WP	=	Retaining Wall Rock Protection
HP	=	Headwall Rock Protection
CE	=	Construction Entrance

Detail Number Reference

NOTES:
1. Contractor shall monitor/maintain all Control Measures during shutdown periods.

Contact Arizona 811 Two Working Days Before You Dig
Call 811 or Click Arizona811.com

NO.	REVISION	BY	DATE
3			
2			
1			

MARICOPA COUNTY

NORTHERN PARKWAY
103RD AVENUE TO 91ST AVENUE - PHASE 1
PROJECT NO. TT0372

Registered Landscape Architect CERTIFICATE NO. 34191 J. SETH PLACKO Date Signed 05/06/26 ARIZONA U.S.A.

	BY	DATE
DESIGNED	DM/EN/AL	5/6/2026
DRAWN	J2CAD	5/6/2026
CHECKED	SP	5/6/2026

J2 Design

99TH AVENUE - EROSION CONTROL PLAN
STA 13+00 TO 23+00

SHEET EC04

TRACS NO.

c:\bmstyl\-pwlsplacko__j2designtd0573074\TT0372_SC_ErosionControl_Plan_04.dgn
OpenRoads_Imperial 4:35:36 PM 5/6/2026 MCDOT_TYLIN_PRINT.tbl TYLI_GN_bwpdf.pltcfg

CITY OF PEORIA LANDSCAPE AND IRRIGATION GENERAL NOTES

1. ALL LANDSCAPE AND IRRIGATION INSTALLED WITHIN THE PUBLIC RIGHT-OF-WAY OR OTHER CITY MAINTAINED AREAS SHALL BE INSTALLED PER THE APPROVED PLANS. ALL LANDSCAPING APPROVED AS A PART OF THE SITE PLAN PROCESS SHALL BE INSTALLED PER THE APPROVED PLANS. ANY DEVIATIONS TO THE APPROVED PLANS REQUIRE CITY APPROVAL.
2. PERMITS ARE REQUIRED FOR ELECTRICAL CONNECTIONS, INCLUDING ELECTRIC METER INSTALLATION, BACKFLOW PREVENTERS,AND WORK WITHIN THE CITY RIGHT-OF-WAY OR CITY DEDICATED PROPERTY. THE CONTRACTOR IS RESPONSIBLE FOR OBTAINING THESE PERMITS PRIOR TO THE COMMENCEMENT OF ANY WORK.
3. ALL LANDSCAPE PROJECTS REQUIRING CITY MAINTENANCE OR WITHIN THE CITY RIGHT-OF-WAY SHALL BE INSPECTED FOR THE FOLLOWING:
   A. PLANT LOCATIONS: THESE LOCATIONS SHALL BE STAKED IN THE FIELD WITH IDENTIFICATION AS TO TREES OR SHRUBS;OR HOLES FOR THE PLANT MATERIALS MAY BE DUG WITH IDENTIFICATION OF PLANT TYPE. USE OF THIS METHOD DOES NOT RELIEVE THE CONTRACTOR OF ANY PLANT RELOCATIONS MADE BY THE CITY.
   B. IRRIGATION INSTALLATION: INSPECTIONS SHALL BE MADE AT THE POINT THE IRRIGATION SYSTEM IS INSTALLED. INSPECTIONS OF THE PIPE DEPTH, AUTOMATIC VALVE INSTALLATION AND EMITTER/SPRAY INSTALLATIONS WILL BE MADE.
   C. SUBSTANTIAL COMPLETION: AN INSPECTION AT COMPLETION OF THE LANDSCAPE AND IRRIGATION INSTALLATION WILL BE MADE. ANY DEFICIENCIES IN THE INSTALLATION WILL BE NOTED AND CORRECTED BY THE CONTRACTOR DURING THE MAINTENANCE PERIOD.
   D. FINAL ACCEPTANCE: A FINAL INSPECTION IS REQUIRED PRIOR TO CITY ACCEPTANCE OF THE LANDSCAPE AND IRRIGATION IMPROVEMENTS.THE ABOVE INSPECTIONS REQUIRE A MINIMUM OF 48-HOURS PRIOR NOTIFICATION TO THE CITY. CALL THE CITY OF PEORIA COMMUNITY DEVELOPMENT DEPARTMENT AT (623) 773-7662 AND LEAVE A MESSAGE INCLUDING THE SUBDIVISION,LOCATION AND TYPE OF INSPECTION TO ARRANGE FOR THESE INSPECTIONS.
4. SEPARATE INSPECTIONS ARE REQUIRED FOR THE BACKFLOW PREVENTER AND ELECTRICAL CONNECTIONS. PLEASE SCHEDULE INSPECTION VIA THE PLANNING INSPECTION REQUEST LINECALL (623) 773-7662 A MINIMUM OF 24-HOURS PRIOR.
5. LANDSCAPE AND IRRIGATION, WHICH IS INSTALLED ON PRIVATE PROPERTY IN CONJUNCTION WITH A CITY APPROVED SITE PLAN, WILL BE INSPECTED BY THE COMMUNITY DEVELOPMENT DEPARTMENT FOR CONFORMANCE TO THE APPROVED SITE PLAN PRIOR TO ISSUANCE OF A CERTIFICATE OF OCCUPANCY (C OF O).
6. THE LANDSCAPE AND IRRIGATION ALONG THE NORTHERN PARKWAY SIDE STREETS WILL BE MAINTAINED BY THE ADJACENT PROPERTY OWNER AFTER COMPLETION OF THE PLANT ESTABLISHMENT PERIOD PER THE APPROVED PLANS.
7. SEE PROJECT SPECIAL PROVISIONS FOR PLANT ESTABLISHMENT SPECIFICATIONS.
8. RIGHT-OF WAY AND CITY MAINTAINED AREAS REQUIRE SEPARATE WATER METER CONNECTIONS.
9. THE CONTRACTOR SHALL BE RESPONSIBLE FOR INSTALLATION, COST AND REQUIRED PERMIT FEES FOR THE WATER METER(S) DESIGNATED TO SERVE THE IRRIGATION SYSTEM.
10. ALL PLANTINGS AT MATURITY SHALL MAINTAIN A MINIMUM 6'-0" CLEARANCE AROUND ALL FIRE HYDRANTS AND FIRE SUPPRESSION DEVICES.
11. PLANTINGS SHALL NOT INTERFERE WITH ANY TRAFFIC CONTROL SIGNS AND SHALL MAINTAIN A MAXIMUM HEIGHT OF 2'-6" WITHIN ANY SIGHT DISTANCE TRIANGLES.
12. INSTALLATION OF THE LANDSCAPE AND IRRIGATION SYSTEM INCLUDING ADDITION OF GROUND PLANT MATERIALS SHALL NOT IMPEDE THE FLOW OF DESIGNED DRAINAGE FACILITIES NOR DECREASE THE DESIGN VOLUME OF ANY DETENTION/RETENTION BASINS.
13. THE CONTRACTOR IS RESPONSIBLE FOR THE LOCATION AND PROTECTION OF ALL UNDERGROUND UTILITIES DURING THE LANDSCAPE AND IRRIGATION INSTALLATION.
14. ALL TREES SHALL MAINTAIN A MINIMUM OF 6'-0" CLEARANCE FROM ANY CITY WATER OR SEWER LINE. ALL PLANTINGS SHALL MAINTAIN A SUFFICIENT DISTANCE TO ANY SANITARY AND STORM SEWER MANHOLES TO ALLOW ACCESS BY MAINTENANCE VEHICLES.
15. A SWALE A MINIMUM OF 6" IN DEPTH SHALL BE PROVIDED IN ALL LANDSCAPE AREAS WITHIN THE CITY RIGHT-OF-WAY PER CITY DETAIL TO PROMOTE WATER HARVESTING.
16. ALL PLANTING AREAS (EXCEPT TURF AREAS) SHALL BE TREATED WITH THREE (3) PRE-EMERGENT HERBICIDE APPLICATIONS BY A LICENSED APPLICATOR PRIOR TO AND AFTER THE PLACEMENT OF THE DECOMPOSED GRANITE, RIVER ROCK ETC. AND A THIRD APPLICATION 30 DAYS PRIOR TO FINAL ACCEPTANCE BY CITY OF PEORIA. APPLICATION DOCUMENTATION WILL BE REQUIRED PRIOR TO ACCEPTANCE OF THE LANDSCAPING BY THE CITY.
17. AS-BUILT DRAWINGS OF THE LANDSCAPE AND IRRIGATION SYSTEM ARE REQUIRED PRIOR TO ACCEPTANCE BY THE CITY AND FOR PROJECTS WITHIN THE CITY RIGHT-OF-WAY OR CITY OWNED PROPERTY. THE AS-BUILT DRAWINGS SHALL SHOW THE LOCATIONS OF ALL PLANTINGS AND THE DIMENSIONS TO FIXED POINTS OF ALL IRRIGATION EQUIPMENT, PIPING ETC.

LANDSCAPE PLANTING GENERAL NOTES

1. DISCREPANCIES BETWEEN THE DRAWINGS, SPECIFICATIONS AND THE SITE SHALL BE BROUGHT TO THE ATTENTION OF THE ENGINEER FOR CLARIFICATION BEFORE STARTING ANY WORK.
2. NOTIFY "BLUE STAKE" PRIOR TO ANY EXCAVATION. ALL UNDERGROUND UTILITIES MUST BE LOCATED PRIOR TO ANY EXCAVATION AND MANUALLY HAND EXCAVATE IN VICINITY OF UTILITIES.
3. DURING PLANT ESTABLISHMENT PERIOD, ALL WEEDS AND UNWANTED GRASSES SHALL BE TREATED WITH POST EMERGENT HERBICIDE AND APPLIED PER MANUFACTURER'S INSTRUCTIONS. REAPPLY AS NECESSARY TO KILL ALL UNWANTED VEGETATION. REMOVE ALL DEAD DEBRIS FROM THE SITE.
4. SEE SPECIAL PROVISIONS FOR SCOPE OF LANDSCAPE ESTABLISHMENT WORK REQUIRED WITHIN ADOT RIGHT-OF-WAY.
5. SEE SPECIAL PROVISIONS FOR SCOPE OF LANDSCAPE ESTABLISHMENT WORK REQUIRED WITHIN CITY OF PEORIA AND CITY OF GLENDALE RIGHT-OF-WAYS AND PROJECT TEMPORARY CONSTRUCTION EASEMENTS, .

LANDSCAPE LEGEND

Symbol	Botanical / Common Name	Quantity	Size	Remarks
	TREES			
	Acacia aneura Mulga	9 EA	24" BOX	Std. Trunk
	Caesalpinia mexicana Mexican Bird of Paradise	5 EA	24" BOX	Std. Trunk
	Chilopsis linearis 'Art's Seedless' Seedless Desert Willow	4 EA	24" BOX	Std. Trunk
	Existing Tree Protect in Place	N/A	N/A	
	SHRUBS			
	Caesalpinia pulcherrima Red Bird of Paradise	23 EA	5 Gallon	Full Past Can
	ACCENTS			
	Asclepias subulata Desert Milkweed	18 EA	5 Gallon	Full Past Can
	Dasylirion wheeleri Desert Spoon	7 EA	5 Gallon	Full Past Can
	Euphorbia antisyphilitica Candelilla	29 EA	5 Gallon	Full Past Can
	Hesperaloe funifera Giant Hesperaloe	6 EA	5 Gallon	Full Past Can
	Hesperaloe x Perfu Pink Parade Hesperaloe	29 EA	5 Gallon	Full Past Can

SURFACE MATERIALS LEGEND

Symbol	Description	Quantity
	Decomposed Granite, 2" Depth Size: 1" Screened Color: Gold	25,328 SY
	Decomposed Granite, 2" Depth Match Existing Size & Color	3,008 SY
	Rip Rap D50 = 6 in (6" Depth)	560 CY

LANDSCAPE QUANTITES SUMMARY

Item	Unit	Quantities
		Glendale
Tree (24" Box)	Each	18
Shrub (5 Gallon)	Each	23
Accents/Cactus (5 Gallon)	Each	89

NO.	REVISION	BY	DATE
3			
2			
1			

MARICOPA COUNTY

NORTHERN PARKWAY
103RD AVENUE TO 91ST AVENUE - PHASE 1
PROJECT NO. TT0372

	BY	DATE
DESIGNED	DM/EN/AL	5/6/2026
DRAWN	J2CAD	5/6/2026
CHECKED	SP	5/6/2026

Registered Landscape Architect CERTIFICATE NO. 34191 J. SETH PLACKO Date Signed 05/06/26 Expires 12/31/27 Arizona U.S.A.

J2 Design

NORTHERN AVENUE
LANDSCAPE LEGEND AND GENERAL NOTES

SHEET LD01

TRACS NO.

c:\bmstyli-pw\splacko__j2design\057307\TT0372_SS_Landscape_LD01.dgn
OpenRoads_Imperial 4:49:28 PM 5/6/2026 MCDOT_TYLIN_PRINT.tbl TYLI_GN_bwpdf.pltcfg

F.H.W.A. REGION	STATE	PROJECT NO.	SHEET NO.	TOTAL SHEETS	RECORD DRAWING
9	AZ	TT0372	196	224	

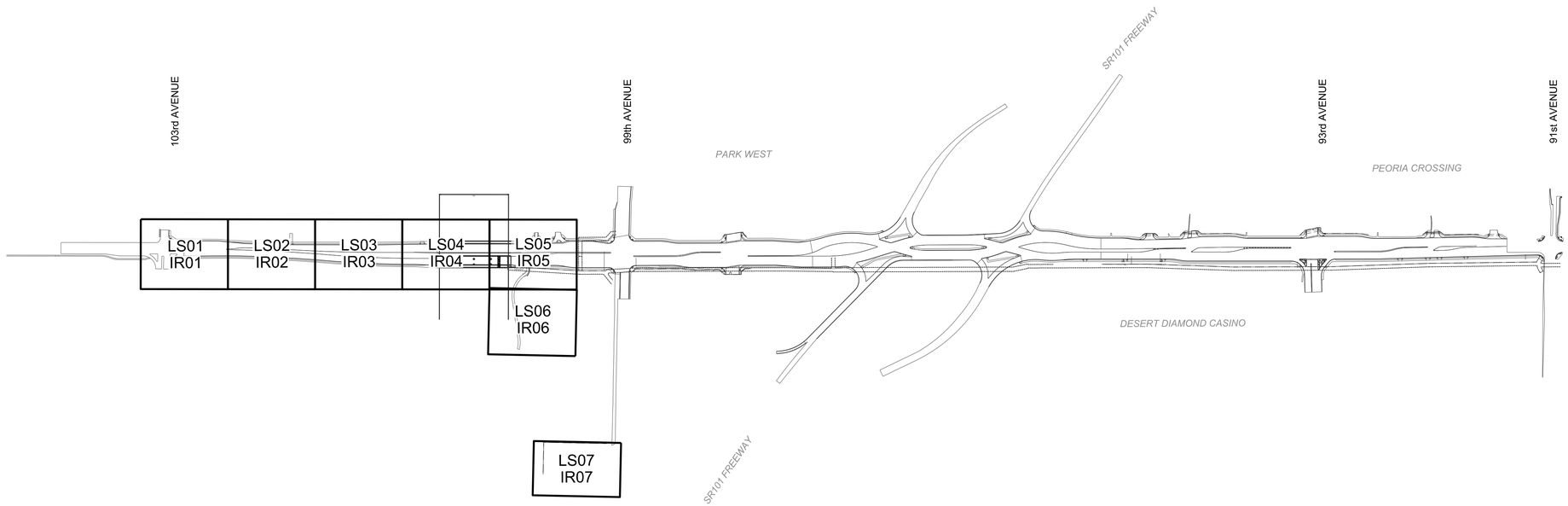

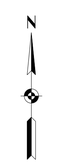

KEYMAP
N.T.S.

NO.	REVISION	BY	DATE
3			
2			
1			

MARICOPA COUNTY

NORTHERN PARKWAY
103RD AVENUE TO 91ST AVENUE - PHASE 1
PROJECT NO. TT0372

	BY	DATE
DESIGNED	DM/EN/AL	5/6/2026
DRAWN	J2CAD	5/6/2026
CHECKED	SP	5/6/2026

Registered Landscape Architect
CERTIFICATE NO.
34191
J. SETH
PLACKO
Date Signed December 10, 2025

J2 Design

LANDSCAPE SHEET KEYMAP

SHEET
LD02

TRACS NO.

TYLI_GN_bwpdf.pltcfg
MCDOT_TYLIN_PRINT.tbl
4:49:36 PM 5/6/2026
OpenRoads_Imperial
c:\bmstyli-pw\splacko__j2design\d0573077\TT0372_SS_Landscape_LD02.dgn

F.H.W.A. REGION	STATE	PROJECT NO.	SHEET NO.	TOTAL SHEETS	RECORD DRAWING
9	AZ	TT0372	197	224	

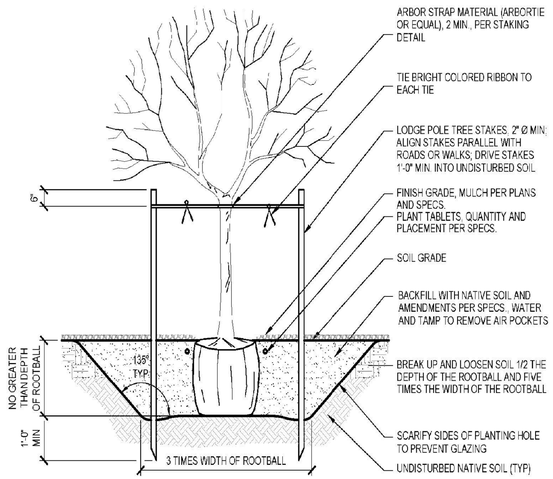

NOTES:

1. WHEN TREE PITS ARE DUG, WATER TEST PITS BY COMPLETELY FILLING WITH WATER AND ALLOWING TO DRAIN FOR 48 HOURS. IF WATER DOES NOT DRAIN, REFER TO OWNER'S REPRESENTATIVE AND PERFORM MEASURES IDENTIFIED IN THE IMPERMEABLE SOILS TREE PLANTING DETAIL
2. POSITION PLANT FOR "BEST SIDE" VIEW AND ORIENT SUN-BURN SUSCEPTIBLE PLANTS PER ORIGINAL ROTATION
3. SCORE THE ROOTBALL. MAKE A VERTICAL CUT 1/4 TO 1/2 INCH DEEP AT FOUR QUADRANTS AROUND SIDES AND TWICE ACROSS
4. TOP OF ROOTBALL SHALL BE FLUSH WITH OR UP TO 1" ABOVE SOIL GRADE. DO NOT BURY ROOT CROWN OF PLANT. MAINTAIN MULCH AWAY FROM TRUNK AND ROOT CROWN
5. DO NOT STAKE SALVAGED TREES OR ANY TREE WITH A LARGER THAN 2" DIAMETER TRUNK
6. TREE TIES SHALL BE ARBOR STRAP TREE STAKING AND GUYING MATERIAL (ARBORTIE OR EQUAL)
7. TREE STAKES SHALL BE 2" DIAMETER LODGE POLES, LENGTH AS REQUIRED (10' MINIMUM), DRIVEN OUTSIDE OF ROOTBALL INTO SUBGRADE (12" MINIMUM)
8. ARRANGE STAKES AROUND TREE CANOPY TO PREVENT ABRASION WOUNDS TO BRANCHES
9. INSTALL TREE GUARD (ARBOR GUARD OR EQUAL) ON TREES LOCATED IN TURF
10. SCARIFY SIDES OF PLANTING HOLE AND SLICE ROOTBALL TO PROMOTE OUTWARD TREE GROWTH.

1 TREE PLANTING

NTS

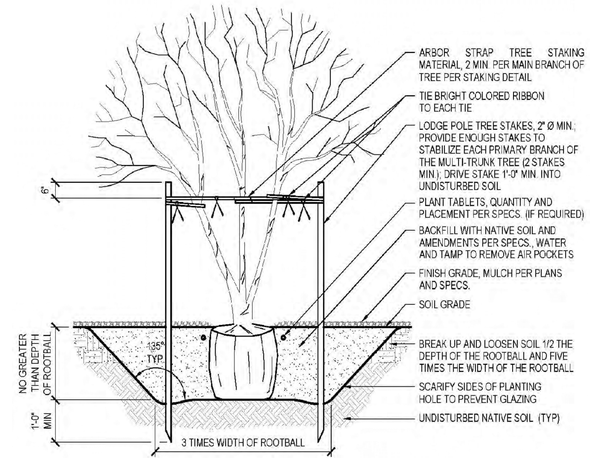

NOTES:

1. WHEN TREE PITS ARE DUG, WATER TEST PITS BY COMPLETELY FILLING WITH WATER AND ALLOWING TO DRAIN FOR 48 HOURS. IF WATER DOES NOT DRAIN, REFER TO OWNER'S REPRESENTATIVE AND PERFORM MEASURES IDENTIFIED IN THE IMPERMEABLE SOILS TREE PLANTING DETAIL
2. POSITION PLANT FOR "BEST SIDE" VIEW AND ORIENT SUN-BURN SUSCEPTIBLE PLANTS PER ORIGINAL ROTATION
3. SCORE THE ROOTBALL. MAKE A VERTICAL CUT 1/4 TO 1/2 INCH DEEP AT 4 QUADRANTS AROUND SIDES AND TWICE ACROSS THE BOTTOM
4. TOP OF ROOTBALL SHALL BE FLUSH WITH OR UP TO 1" ABOVE SOIL GRADE. DO NOT BURY ROOT CROWN OF PLANT. MAINTAIN MULCH AWAY FROM TRUNK AND ROOT CROWN
5. DO NOT STAKE SALVAGED TREES
6. PROVIDE SUPPLEMENTAL STAKING IF REQUIRED TO PROPERLY SUPPORT THE PLANT MATERIAL PER TREE STAKING DETAILS
7. TREE TIES SHALL BE AN ARBOR STRAP MATERIAL (ARBORTIE TREE STAKING AND GUYING MATERIAL OR EQUAL)
8. TREE STAKES SHALL BE 2" DIAMETER LODGE POLES, LENGTH AS REQUIRED (10' MINIMUM), DRIVEN OUTSIDE OF ROOTBALL INTO SUBGRADE (12" MINIMUM), ARRANGE STAKES AND TIE WIRES AROUND TREE CANOPY TO PREVENT ABRASION WOUNDS TO BRANCHES
9. INSTALL TREE GUARD (ARBOR GUARD OR EQUAL) ON TREES LOCATED IN TURF
10. SCARIFY SIDES OF PLANTING HOLE AND SLICE ROOTBALL TO PROMOTE OUTWARD TREE GROWTH.

2 MULTI-TRUNK TREE PLANTING

NTS

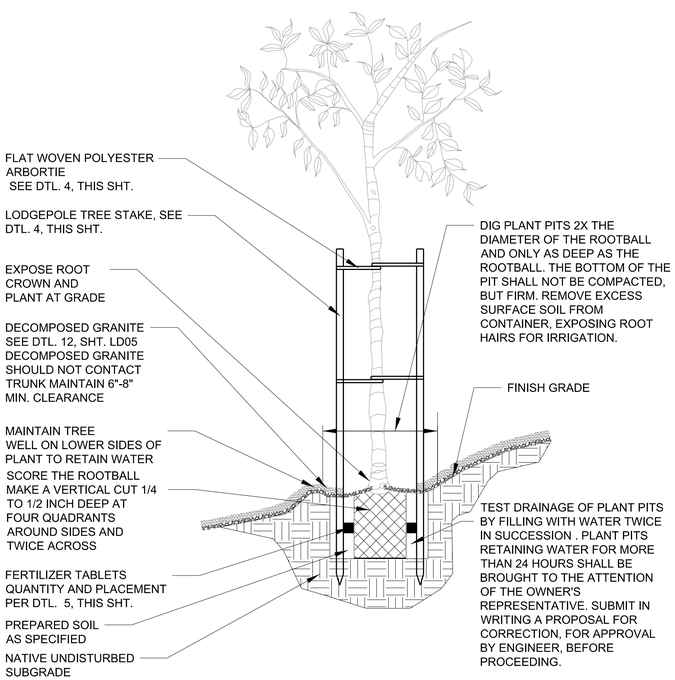

3 TREE PLANTING ON SLOPE

NTS

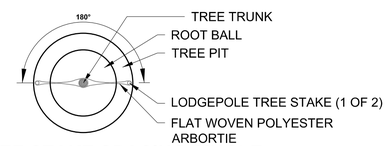

TREE STAKE SPACING SINGLE TRUNK TREES

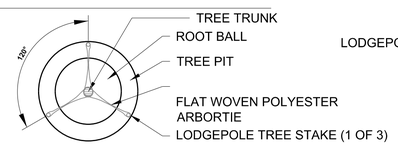

TREE STAKE SPACING MULTI TRUNK TREES

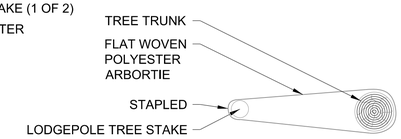

TYP. WIRE ATTACHENT

TREE STAKING NOTES:

1. END OF FLAT WOVEN POLYESTER ARBORTIE STAPLED TO LODGEPOLE TREE STAKE. PLACE TOP TIE FOR MAXIMUM SUPPORT ABOVE LOWEST SCAFFOLD BRANCHES. BOTTOM TIE PLACED HALFWAY BETWEEN TOP TIE AND GRADE, OR AS DIRECTED BY CITY OF PEORIA ARBORIST.
2. LODGE POLE TREE STAKES TO BE 2" DIA. BY LENGTH VARIES. DRIVEN MINIMUM OF 12" INTO UNDISTURBED SOIL AT OUTER FACE OF PLANTING PIT, DO NOT PENETRATE ROOTBALL. LODGE POLE TO BE CUT OFF AT 6" ABOVE TOP ARBORTIE.
3. PLANTS DELIVERED WITH CRACKED OR BROKEN CONTAINERS, NOT ROOTED IN CAN, OR ROOT BOUND WILL BE REJECTED.
4. TREE TRUNK SHALL BE CAPABLE OF MOVEMENT IN ALL DIRECTIONS, AVOID RIGID RESTRAINT OF TREE- COORDINATE INSPECTION WITH CITY OF PEORIA ARBORIST.

4 TREE STAKING

NTS

FERTILIZER TABLETS

CONTAINER SIZE	APPLICATION RATES
1 GAL. / 3 GAL.	1 TABLET
5 GAL.	2 TABLET
15 GAL. / 16" BOX	4 TABLET
24" BOX	6 TABLET
30" BOX	8 TABLET
36" BOX	10 TABLET
48" BOX	12 TABLET
≥ 60" BOX	16 TABLET

FERTILIZER TABLET NOTES:

1. FERTILIZER TABLETS SHALL BE "SLOW RELEASE" AGRIFORM 21 GRAM WITH 20-10-5 ANALYSIS, TYP.
2. INSTALL FERTILIZER TABLETS HALFWAY DOWN ALONG ROOTBALL, AND 1 INCH FROM EDGE OF ROOBTALL

5 FERTILIZER TABLETS

NTS

Contact Arizona 811 Two Working Days Before You Dig
Call 811 or Click Arizona811.com

NO.	REVISION	BY	DATE
3			
2			
1			

MARICOPA COUNTY

NORTHERN PARKWAY
103RD AVENUE TO 91ST AVENUE - PHASE 1
PROJECT NO. TT0372

Registered Landscape Architect CERTIFICATE NO. 34191 J. SETH PLACKO Date Signed 5/6/2026 ARIZONA U.S.A.

	BY	DATE
DESIGNED	DM/EN/AL	5/6/2026
DRAWN	J2CAD	5/6/2026
CHECKED	SP	5/6/2026

J2 Design

NORTHERN AVENUE
LANDSCAPE DETAILS

SHEET LD03

TRACS NO.

OpenRoads_Imperial 4:49:43 PM 5/6/2026 MCDOT_TYLIN_PRINT.tbl TYLI_GN_bwpdf.pltcfg
c:\bmstyli-pw\placko__j2design\d0573077\TT0372_SD_Landscape_LD03.dgn

SHRUB PLANTING NOTES:

1. SCARIFY GLAZED PERIMETER OF PLANT PIT.

2. TEST PLANT PITS FOR DRAINAGE.

3. CONSTRUCT AN EXAMPLE OF IRRIGATION SAUCER FOR REVIEW AND APPROVAL BY CITY OF PEORIA REPRESENTATIVE PRIOR TO PLACING DECOMPOSED GRANITE.

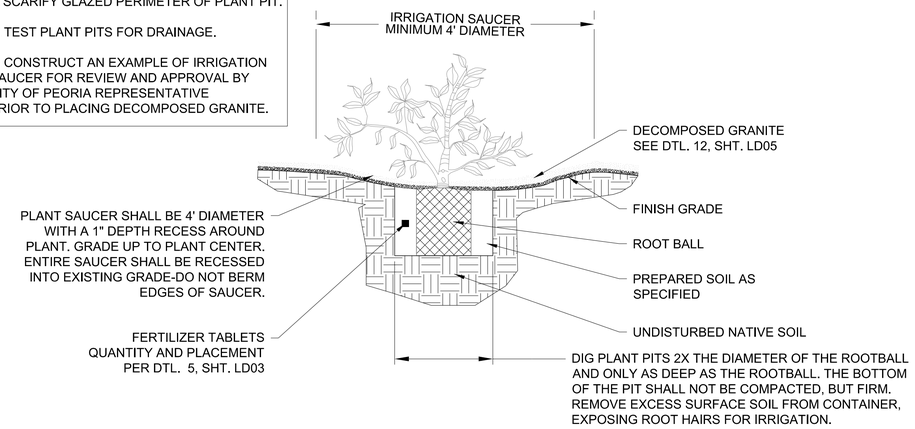

6 SHRUB PLANTING

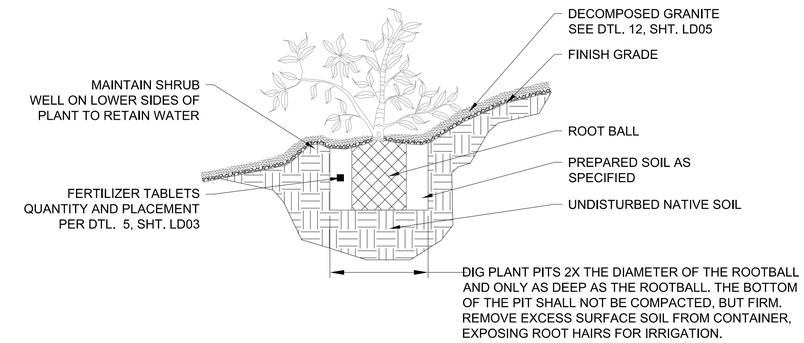

7 SHRUB PLANTING ON SLOPE

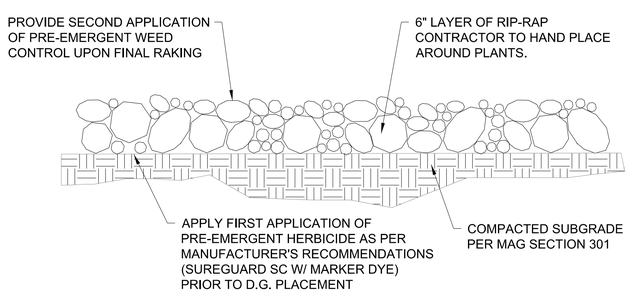

NOTES:
1. CONTRACTOR TO PROVIDE ONE FIVE (5) GALLON BUCKET OF PROPOSED RIP-RAP. SAMPLE TO CITY OF PEORIA REPRESENTATIVE FOR REVIEW AND APPROVAL PRIOR TO ORDERING AND INSTALLATION.
2. CONTRACTOR SHALL PROVIDE WRITTEN RECORD FOR EACH OF THE TWO (2) APPLICATIONS OF PRE-EMERGENT INCLUDING; DATE AND TIME OF APPLICATION, PRODUCT USED, APPLICATION RATE, COMPANY NAME AND EMPLOYEE NAME.

8 RIP-RAP

NTS

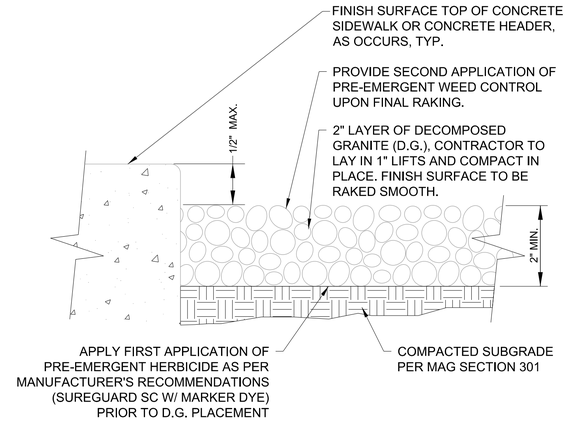

GRADATION TABLE

	DECOMPOSED GRANITE 1" SCREENED	
SIEVE	% RET	% PASS
4"	0	100
3"	0	100
2"	0	100
1½"	0	100
1¼"	0	100
1"	11	89
¾"	67	33
½"	95	5
⅜"	97	3
¼"	99	1
#4	99	1
#8	99	1
#10		
#16		
#30	99	1
#40		
#50		
#100		
#200	99.5	0.5

NOTES:
1. CONTRACTOR TO PROVIDE ONE FIVE (5) GALLON BUCKET OF PROPOSED DECOMPOSED GRANITE SAMPLE TO CITY OF PEORIA REPRESENTATIVE FOR REVIEW AND APPROVAL PRIOR TO ORDERING AND INSTALLATION.
2. CONTRACTOR SHALL PROVIDE WRITTEN RECORD FOR EACH OF THE TWO (2) APPLICATIONS OF PRE-EMERGENT INCLUDING; DATE AND TIME OF APPLICATION, PRODUCT USED, APPLICATION RATE, COMPANY NAME AND EMPLOYEE NAME.

9 DECOMPOSED GRANITE AND GRADATION TABLE

NTS

Contact Arizona 811 Two Working Days Before You Dig
Call 811 or Click Arizona811.com

NO.	REVISION	BY	DATE
3			
2			
1			

MARICOPA COUNTY

NORTHERN PARKWAY
103RD AVENUE TO 91ST AVENUE - PHASE 1
PROJECT NO. TT0372

	BY	DATE
DESIGNED	DM/EN/AL	5/6/2026
DRAWN	J2CAD	5/6/2026
CHECKED	SP	5/6/2026

Registered Landscape Architect CERTIFICATE NO. 34191 J. SETH PLACKO Date Signed 05/06/26 ARIZONA, U.S.A.

J2 Design

NORTHERN AVENUE
LANDSCAPE DETAILS

SHEET LD04

TRACS NO.

OpenRoads_Imperial 4:49:51 PM 5/6/2026 MCDOT_TYLIN_PRINT.tbl TYLI_GN_bwpdf.pltcfg
c:\bmstyl\i-pw\splacko__j2design\d0573077\TT0372_SD_Landscape_LD04.dgn

F.H.W.A. REGION	STATE	PROJECT NO.	SHEET NO.	TOTAL SHEETS	RECORD DRAWING
9	AZ	TT0372	199	224	

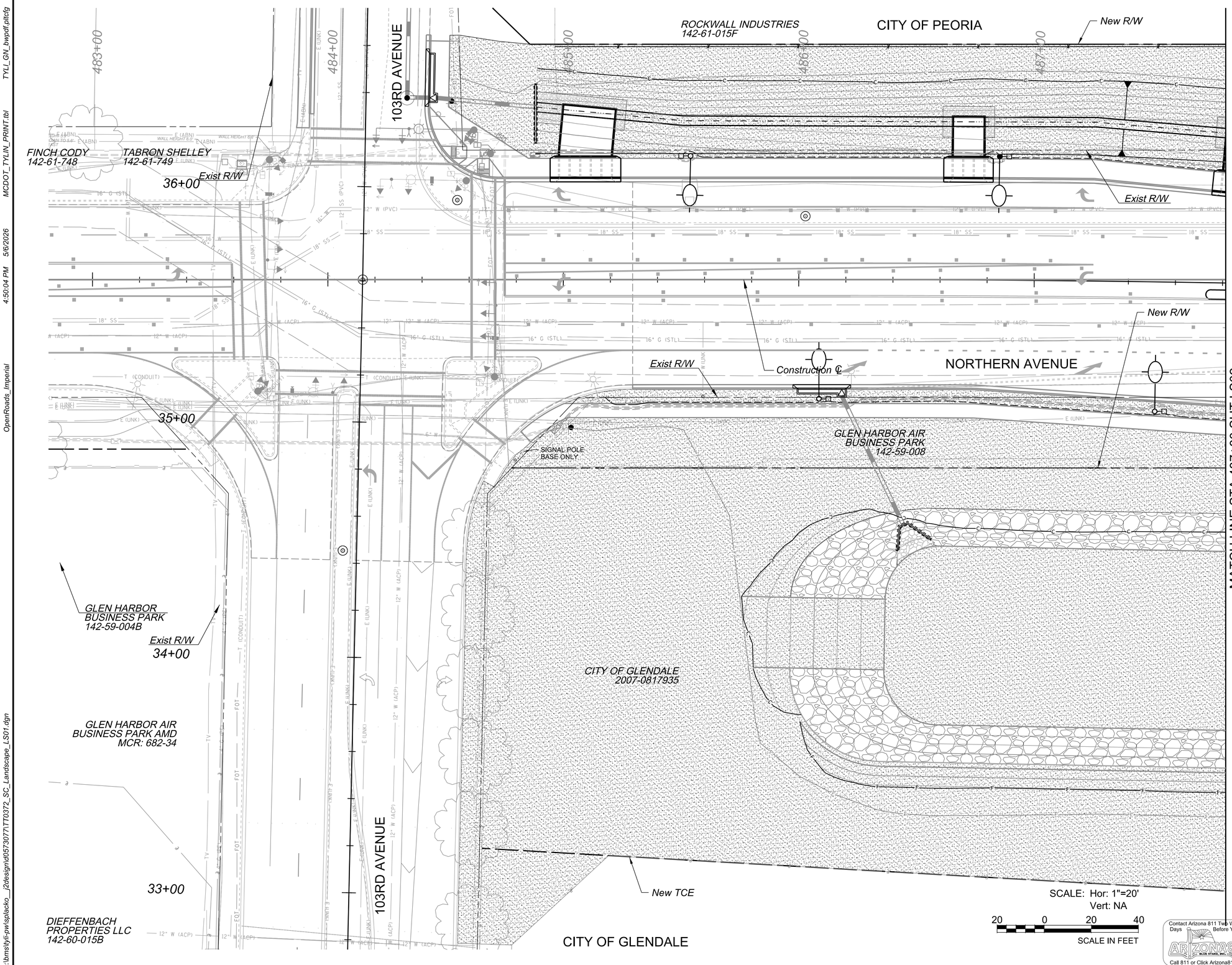

SCALE: Hor: 1"=20'
Vert: NA

20 0 20 40
SCALE IN FEET

Contact Arizona 811 Two Working Days Before You Dig
ARIZONA811 BLUE STAKE, INC.
Call 811 or Click Arizona811.com

LANDSCAPE LEGEND

Symbol	Botanical / Common Name	Quantity	
	TREES		
	Acacia aneura Mulga	0	EA
	Caesalpinia mexicana Mexican Bird of Paradise	0	EA
	Chilopsis linearis 'Art's Seedless' Seedless Desert Willow	0	EA
	Existing Tree - Protect in Place		N/A
	SHRUBS		
	Caesalpinia pulcherrima Red Bird of Paradise	0	EA
	ACCENTS		
	Asclepias subulata Desert Milkweed	0	EA
	Dasylirion wheeleri Desert Spoon	0	EA
	Euphorbia antisyphilitica Candelilla	0	EA
	Hesperaloe funifera Giant Hesperaloe	0	EA
	Hesperaloe x Perfu Pink Parade Hesperaloe	0	EA

SURFACE MATERIALS LEGEND

Symbol	Description	Quantity	
	Decomposed Granite, 2" Depth 1" Screened Color: Gold	7,965	SY
	Decomposed Granite, 2" Depth Match Existing Size & Color	0	SY
	Rip Rap D50 = 6 in (6" Depth)	130	CY

NO.	REVISION	BY	DATE
3			
2			
1			

MARICOPA COUNTY

NORTHERN PARKWAY
103RD AVENUE TO 91ST AVENUE - PHASE 1
PROJECT NO. TT0372

	BY	DATE
DESIGNED	DM/EN/AL	5/6/2026
DRAWN	J2CAD	5/6/2026
CHECKED	SP	5/6/2026

Registered Landscape Architect CERTIFICATE NO. 34191 J. SETH PLACKO Date Signed 05/06/26 Expires 12/31/27 U.S.A.

J2 Design

NORTHERN AVENUE - LANDSCAPE PLAN
STA 482+80 TO 487+80

SHEET LS01

TRACS NO.

TYLI_GN_bwpdf.pltcfg MCDOT_TYLIN_PRINT.tbl 5/6/2026 4:50:04 PM OpenRoads_Imperial

c:\bmstyli-pw\splacko__j2design\057307\TT0372_SC_Landscape_LS01.dgn

F.H.W.A. REGION	STATE	PROJECT NO.	SHEET NO.	TOTAL SHEETS	RECORD DRAWING
9	AZ	TT0372	200	224	

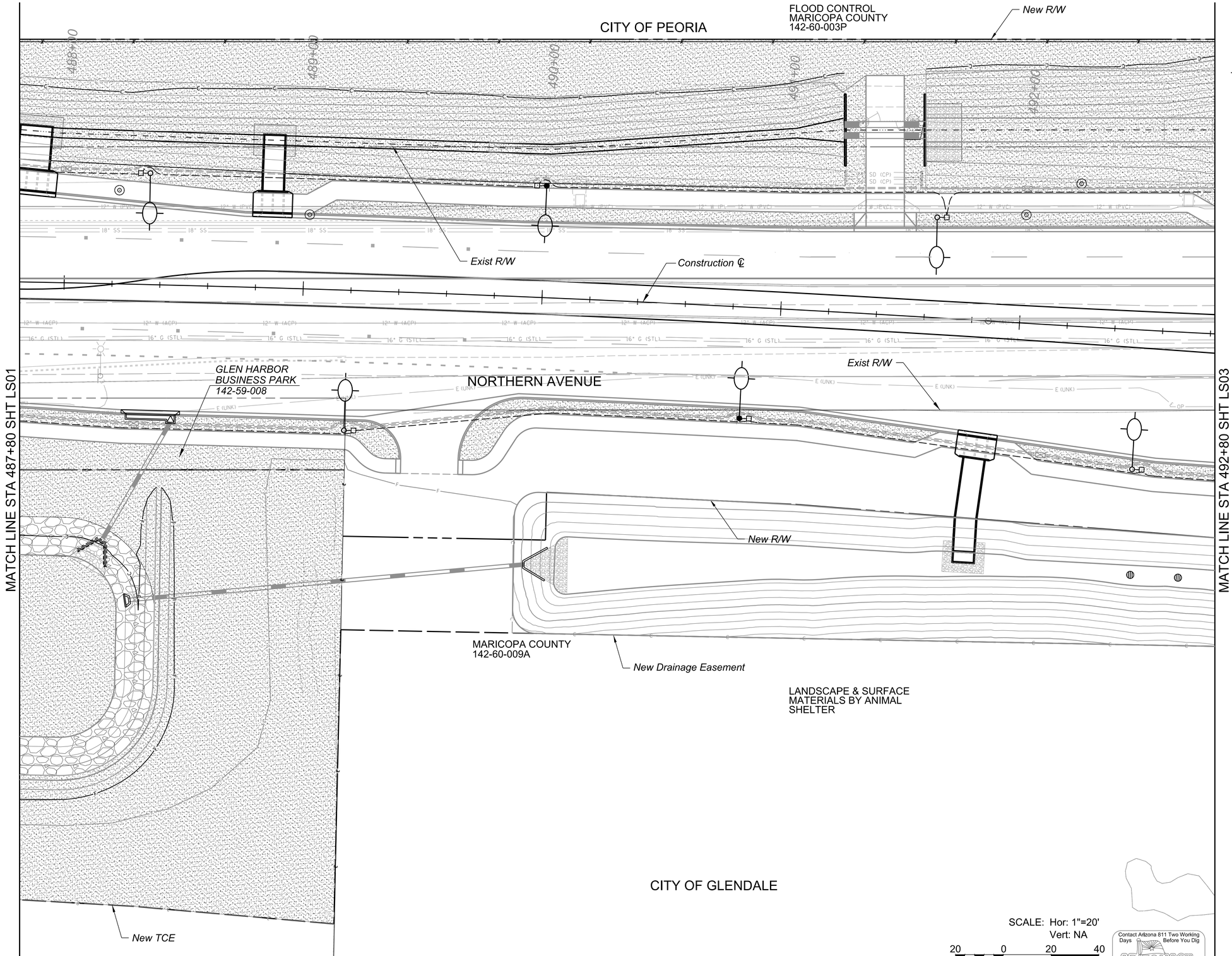

LANDSCAPE LEGEND

Symbol	Botanical / Common Name	Quantity	
	TREES		
	Acacia aneura Mulga	0	EA
	Caesalpinia mexicana Mexican Bird of Paradise	0	EA
	Chilopsis linearis 'Art's Seedless' Seedless Desert Willow	0	EA
	Existing Tree - Protect in Place		N/A
	SHRUBS		
	Caesalpinia pulcherrima Red Bird of Paradise	0	EA
	ACCENTS		
	Asclepias subulata Desert Milkweed	0	EA
	Dasylirion wheeleri Desert Spoon	0	EA
	Euphorbia antisyphilitica Candelilla	0	EA
	Hesperaloe funifera Giant Hesperaloe	0	EA
	Hesperaloe x Perfu Pink Parade Hesperaloe	0	EA

SURFACE MATERIALS LEGEND

Symbol	Description	Quantity	
	Decomposed Granite, 2" Depth 1" Screened Color: Gold	6,105	SY
	Decomposed Granite, 2" Depth Match Existing Size & Color	0	SY
	Rip Rap D50 = 6 in (6" Depth)	45	CY

Contact Arizona 811 Two Working Days Before You Dig
ARIZONA811 BLUE STAKE, INC.
Call 811 or Click Arizona811.com

NO.	REVISION	BY	DATE
3			
2			
1			

MARICOPA COUNTY

NORTHERN PARKWAY
103RD AVENUE TO 91ST AVENUE - PHASE 1
PROJECT NO. TT0372

Registered Landscape Architect
CERTIFICATE NO.
34191
J. SETH
PLACKO
Date Signed 05/06/26
ARIZONA U.S.A.

	BY	DATE
DESIGNED	DM/EN/AL	5/6/2026
DRAWN	J2CAD	5/6/2026
CHECKED	SP	5/6/2026

J2 Design

NORTHERN AVENUE - LANDSCAPE PLAN
STA 487+80 TO 492+80

SHEET LS02

TRACS NO.

TYLI_GN_bwpdf.pltcfg
MCDOT_TYLIN_PRINT.tbl
4:50:17 PM 5/6/2026
OpenRoads_Imperial
c:\bmstyl\-pw\splacko__j2design\d0573071\TT0372_SC_Landscape_LS02.dgn

F.H.W.A. REGION	STATE	PROJECT NO.	SHEET NO.	TOTAL SHEETS	RECORD DRAWING
9	AZ	TT0372	201	224	

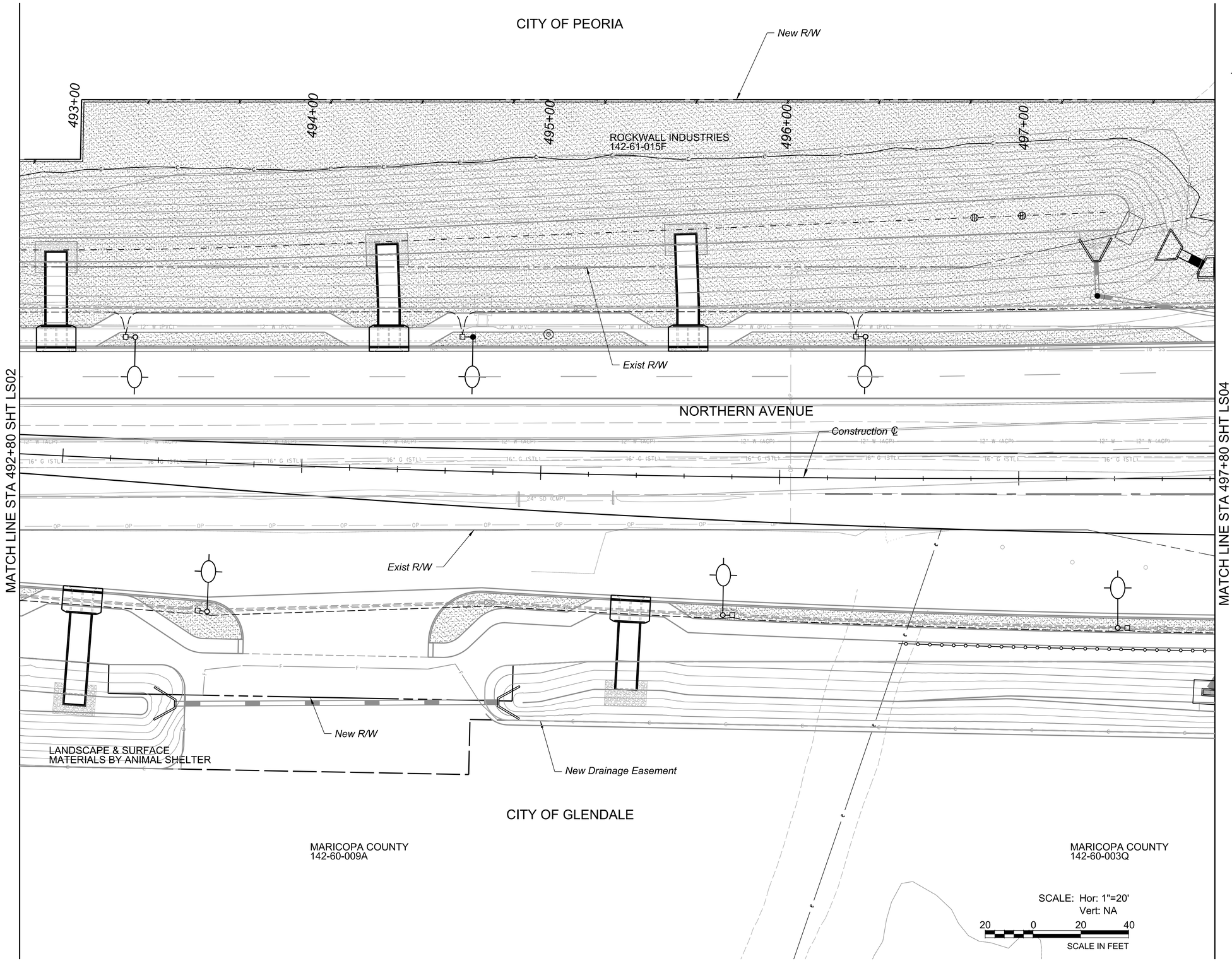

LANDSCAPE LEGEND

Symbol	Botanical / Common Name	Quantity	
	TREES		
	Acacia aneura *Mulga*	0	EA
	Caesalpinia mexicana *Mexican Bird of Paradise*	0	EA
	Chilopsis linearis 'Art's Seedless' *Seedless Desert Willow*	0	EA
	Existing Tree - Protect in Place		N/A
	SHRUBS		
	Caesalpinia pulcherrima *Red Bird of Paradise*	0	EA
	ACCENTS		
	Asclepias subulata *Desert Milkweed*	0	EA
	Dasylirion wheeleri *Desert Spoon*	0	EA
	Euphorbia antisyphilitica *Candelilla*	0	EA
	Hesperaloe funifera *Giant Hesperaloe*	0	EA
	Hesperaloe x Perfu *Pink Parade Hesperaloe*	0	EA

SURFACE MATERIALS LEGEND

Symbol	Description	Quantity	
	Decomposed Granite, 2" Depth *1" Screened* *Color: Gold*	5,297	SY
	Decomposed Granite, 2" Depth *Match Existing Size & Color*	0	SY
	Rip Rap *D50 = 6 in (6" Depth)*	0	CY

Contact Arizona 811 Two Working Days Before You Dig
ARIZONA811 BLUE STAKE, INC.
Call 811 or Click Arizona811.com

NO.	REVISION	BY	DATE
3			
2			
1			

MARICOPA COUNTY

NORTHERN PARKWAY
103RD AVENUE TO 91ST AVENUE - PHASE 1
PROJECT NO. TT0372

	BY	DATE
DESIGNED	DM/EN/AL	5/6/2026
DRAWN	J2CAD	5/6/2026
CHECKED	SP	5/6/2026

Registered Landscape Architect
CERTIFICATE NO.
34191
J. SETH
PLACKO
Date Signed 05/06/26
ARIZONA, U.S.A.

J2 Design

NORTHERN AVENUE - LANDSCAPE PLAN
STA 492+80 TO 497+80

SHEET
LS03

TRACS NO.

c:\bmsi\tylj-pw\splacko__j2design\d0573071\TT0372_SC_Landscape_LS03.dgn
OpenRoads_Imperial 4:50:34 PM 5/6/2026 MCDOT_TYLIN_PRINT.tbl TYLI_GN_bwpdf.pltcfg

F.H.W.A. REGION	STATE	PROJECT NO.	SHEET NO.	TOTAL SHEETS	RECORD DRAWING
9	AZ	TT0372	202	224	

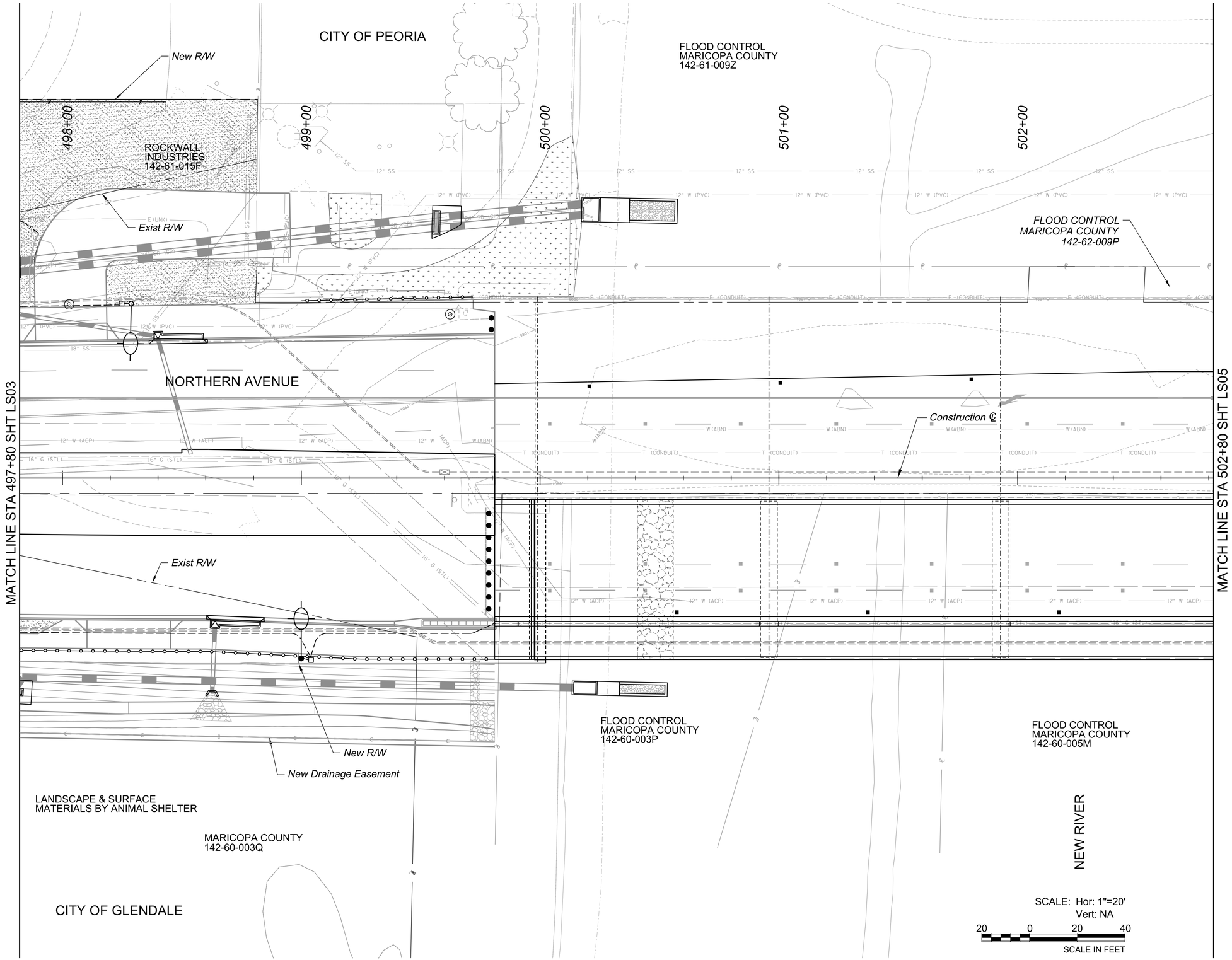

LANDSCAPE LEGEND

Symbol	Botanical / Common Name	Quantity	
TREES			
	Acacia aneura *Mulga*	0	EA
	Caesalpinia mexicana *Mexican Bird of Paradise*	0	EA
	Chilopsis linearis 'Art's Seedless' *Seedless Desert Willow*	0	EA
	Existing Tree - Protect in Place		N/A
SHRUBS			
	Caesalpinia pulcherrima *Red Bird of Paradise*	0	EA
ACCENTS			
	Asclepias subulata *Desert Milkweed*	0	EA
	Dasylirion wheeleri *Desert Spoon*	0	EA
	Euphorbia antisyphilitica *Candelilla*	0	EA
	Hesperaloe funifera *Giant Hesperaloe*	0	EA
	Hesperaloe x Perfu *Pink Parade Hesperaloe*	0	EA

SURFACE MATERIALS LEGEND

Symbol	Description	Quantity	
	Decomposed Granite, 2" Depth *1" Screened* *Color: Gold*	617	SY
	Decomposed Granite, 2" Depth *Match Existing Size & Color*	417	SY
	Rip Rap *D50 = 6 in (6" Depth)*	0	CY

Contact Arizona 811 Two Working Days Before You Dig
Call 811 or Click Arizona811.com

NO.	REVISION	BY	DATE
3			
2			
1			

MARICOPA COUNTY

NORTHERN PARKWAY
103RD AVENUE TO 91ST AVENUE - PHASE 1
PROJECT NO. TT0372

	BY	DATE
DESIGNED	DM/EN/AL	5/6/2026
DRAWN	J2CAD	5/6/2026
CHECKED	SP	5/6/2026

Registered Landscape Architect CERTIFICATE NO. 34191 J. SETH PLACKO Date Signed 05/06/26 ARIZONA, U.S.A.

J2 Design

NORTHERN AVENUE - LANDSCAPE PLAN
STA 497+80 TO 502+80

SHEET LS04

TRACS NO.

c:\bmsltyl\-pw\splacko__j2design\057307\TT0372_SC_Landscape_LS04.dgn
OpenRoads_Imperial 4:50:51 PM 5/6/2026 MCDOT_TYLIN_PRINT.tbl TYLI_GN_bwpdf.pltcfg

F.H.W.A. REGION	STATE	PROJECT NO.	SHEET NO.	TOTAL SHEETS	RECORD DRAWING
9	AZ	TT0372	203	224	

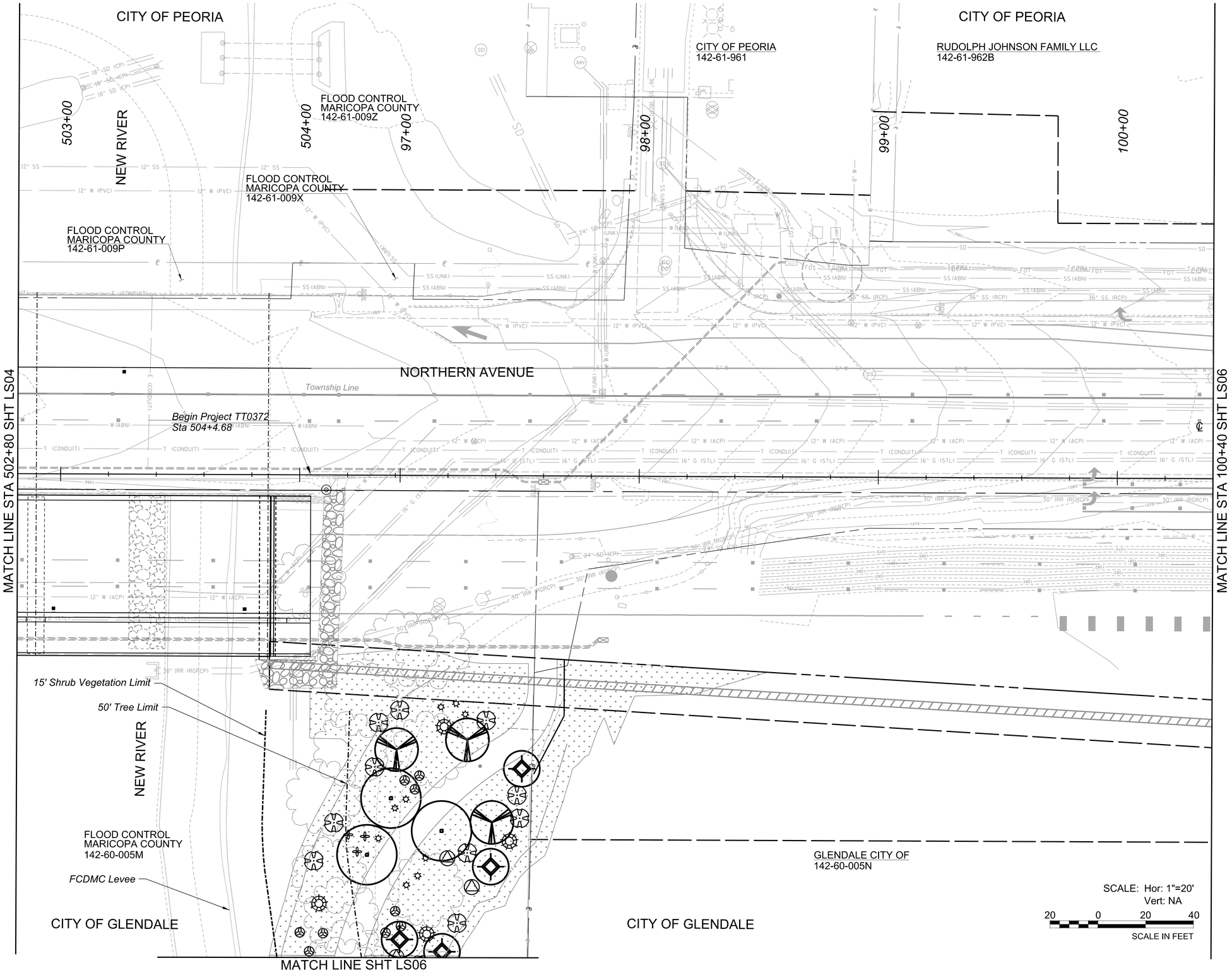

LANDSCAPE LEGEND

Symbol	Botanical / Common Name	Quantity	
TREES			
	Acacia aneura *Mulga*	3	EA
	Caesalpinia mexicana *Mexican Bird of Paradise*	4	EA
	Chilopsis linearis 'Art's Seedless' *Seedless Desert Willow*	3	EA
	Existing Tree - Protect in Place		N/A
SHRUBS			
	Caesalpinia pulcherrima *Red Bird of Paradise*	9	EA
ACCENTS			
	Asclepias subulata *Desert Milkweed*	3	EA
	Dasylirion wheeleri *Desert Spoon*	4	EA
	Euphorbia antisyphilitica *Candelilla*	9	EA
	Hesperaloe funifera *Giant Hesperaloe*	2	EA
	Hesperaloe x Perfu *Pink Parade Hesperaloe*	9	EA

SURFACE MATERIALS LEGEND

Symbol	Description	Quantity	
	Decomposed Granite, 2" Depth *1" Screened* *Color: Gold*	0	SY
	Decomposed Granite, 2" Depth *Match Existing Size & Color*	1,312	SY
	Rip Rap *D50 = 6 in (6" Depth)*	0	CY

Contact Arizona 811 Two Working Days Before You Dig
ARIZONA811 BLUE STAKE, INC.
Call 811 or Click Arizona811.com

NO.	REVISION	BY	DATE
3			
2			
1			

MARICOPA COUNTY

NORTHERN PARKWAY
103RD AVENUE TO 91ST AVENUE - PHASE 1
PROJECT NO. TT0372

	BY	DATE
DESIGNED	DM/EN/AL	5/6/2026
DRAWN	J2CAD	5/6/2026
CHECKED	SP	5/6/2026

Registered Landscape Architect
CERTIFICATE NO.
34191
J. SETH PLACKO
Date Signed 05/06/26
ARIZONA, U.S.A.

J2 Design

NORTHERN AVENUE - LANDSCAPE PLAN
STA 502+80 TO 100+40

SHEET LS05

TRACS NO.

TYLI_GN_bwpdf.pltcfg
MCDOT_TYLIN_PRINT.tbl
5/6/2026
4:51:02 PM
OpenRoads_Imperial
c:\bmsl\tyli-pw\splacko__j2design\d0573071\TT0372_SC_Landscape_LS05.dgn

F.H.W.A. REGION	STATE	PROJECT NO.	SHEET NO.	TOTAL SHEETS	RECORD DRAWING
9	AZ	TT0372	204	224	

MATCH LINE SHT LS05

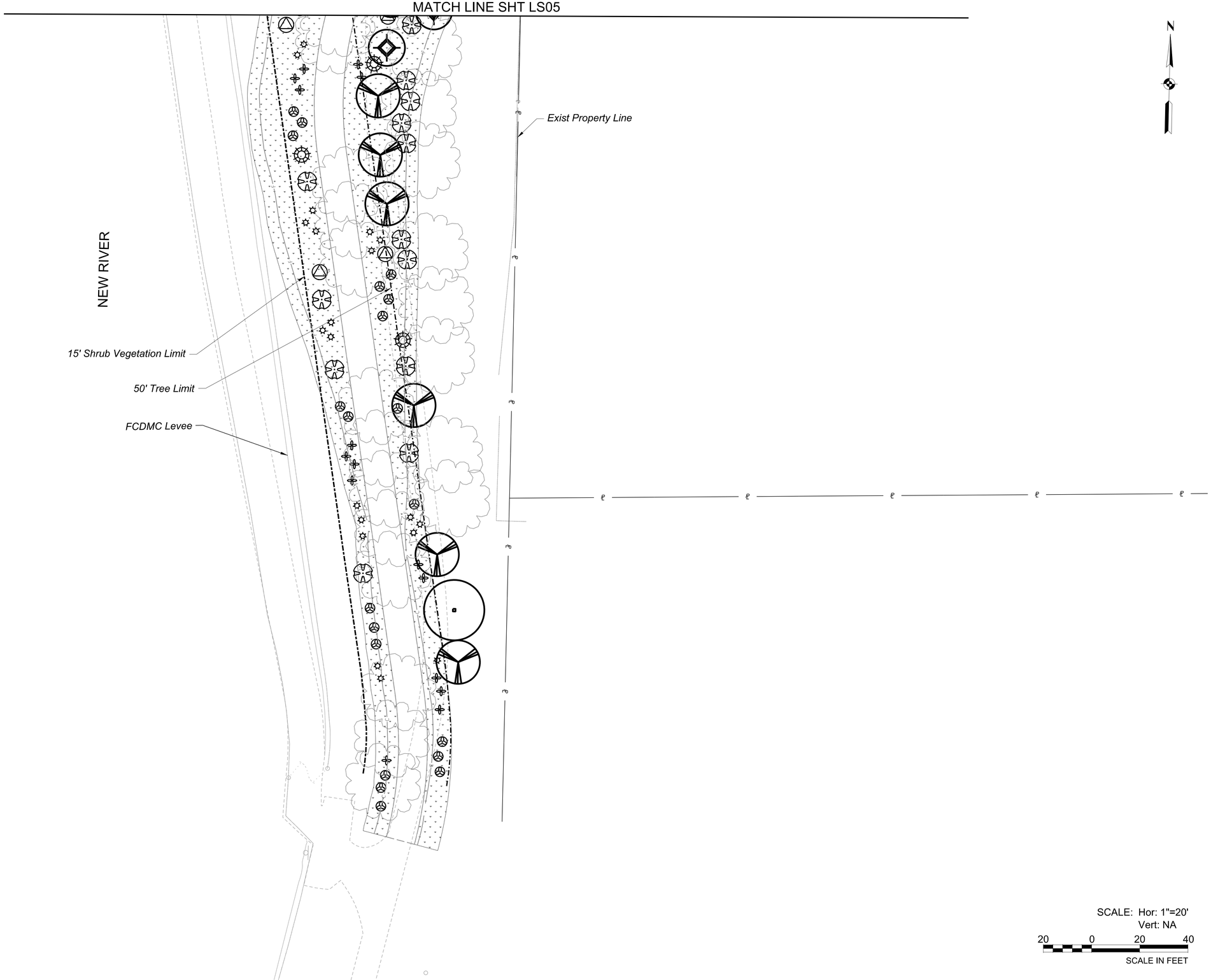

SCALE: Hor: 1"=20'
Vert: NA

20 0 20 40
SCALE IN FEET

LANDSCAPE LEGEND

Symbol	Botanical / Common Name	Quantity	
TREES			
	Acacia aneura Mulga	6	EA
	Caesalpinia mexicana Mexican Bird of Paradise	1	EA
	Chilopsis linearis 'Art's Seedless' Seedless Desert Willow	1	EA
	Existing Tree - Protect in Place		N/A
SHRUBS			
	Caesalpinia pulcherrima Red Bird of Paradise	0	EA
ACCENTS			
	Asclepias subulata Desert Milkweed	15	EA
	Dasylirion wheeleri Desert Spoon	3	EA
	Euphorbia antisyphilitica Candelilla	20	EA
	Hesperaloe funifera Giant Hesperaloe	2	EA
	Hesperaloe x Perfu Pink Parade Hesperaloe	20	EA

SURFACE MATERIALS LEGEND

Symbol	Description	Quantity	
	Decomposed Granite, 2" Depth 1" Screened Color: Gold	0	SY
	Decomposed Granite, 2" Depth Match Existing Size & Color	1,280	SY
	Rip Rap D50 = 6 in (6" Depth)	0	CY

Contact Arizona 811 Two Working Days Before You Dig
Call 811 or Click Arizona811.com

NO.	REVISION	BY	DATE
3			
2			
1			

MARICOPA COUNTY

NORTHERN PARKWAY
103RD AVENUE TO 91ST AVENUE - PHASE 1
PROJECT NO. TT0372

	BY	DATE
DESIGNED	DM/EN/AL	5/6/2026
DRAWN	J2CAD	5/6/2026
CHECKED	SP	5/6/2026

Registered Landscape Architect CERTIFICATE NO. 34191 J. SETH PLACKO Date Signed 5/6/26 Not valid until signed

J2 Design

NORTHERN AVENUE - LANDSCAPE PLAN
STA 95+40 TO 100+40

SHEET LS06

TRACS NO.

c:\bmstyli-pw\splacko__j2design\d0573077\TT0372_SC_Landscape_LS06.dgn
OpenRoads_Imperial 4:51:11 PM 5/6/2026 MCDOT_TYLIN_PRINT.tbl TYLI_GN_bwpdf.pltcfg

F.H.W.A. REGION	STATE	PROJECT NO.	SHEET NO.	TOTAL SHEETS	RECORD DRAWING
9	AZ	TT0372	205	224	

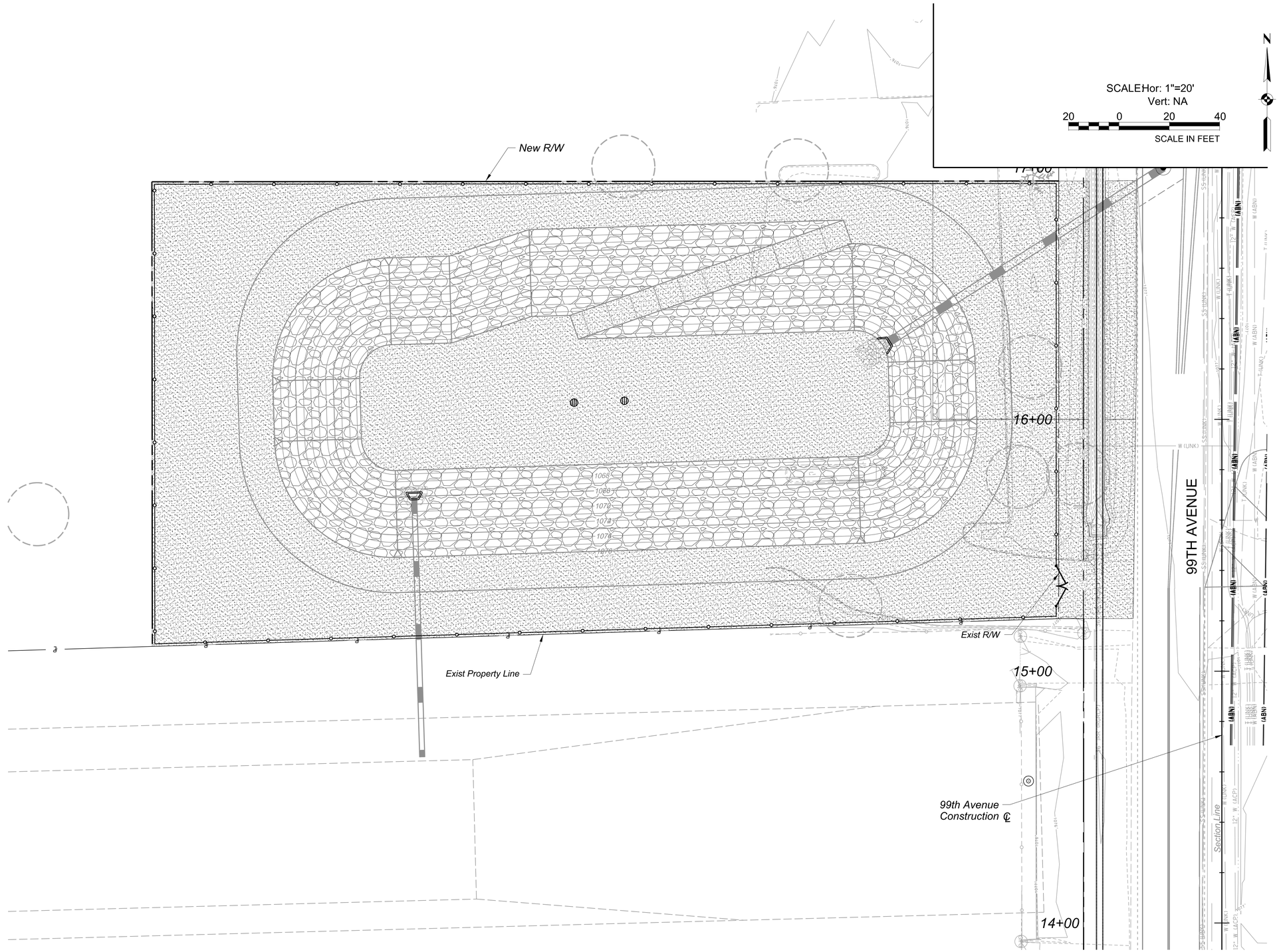

LANDSCAPE LEGEND

Symbol	Botanical / Common Name	Quantity	
	TREES		
	Acacia aneura *Mulga*	0	EA
	Caesalpinia mexicana *Mexican Bird of Paradise*	0	EA
	Chilopsis linearis 'Art's Seedless' *Seedless Desert Willow*	0	EA
	Existing Tree - Protect in Place		N/A
	SHRUBS		
	Caesalpinia pulcherrima *Red Bird of Paradise*	0	EA
	ACCENTS		
	Asclepias subulata *Desert Milkweed*	0	EA
	Dasylirion wheeleri *Desert Spoon*	0	EA
	Euphorbia antisyphilitica *Candelilla*	0	EA
	Hesperaloe funifera *Giant Hesperaloe*	0	EA
	Hesperaloe x Perfu *Pink Parade Hesperaloe*	0	EA

SURFACE MATERIALS LEGEND

Symbol	Description	Quantity	
	Decomposed Granite, 2" Depth *1" Screened* *Color: Gold*	5,344	SY
	Decomposed Granite, 2" Depth *Match Existing Size & Color*	0	SY
	Rip Rap *D50 = 6 in (6" Depth)*	385	CY

Contact Arizona 811 Two Working Days Before You Dig
ARIZONA811 BLUE STAKE, INC.
Call 811 or Click Arizona811.com

NO.	REVISION	BY	DATE
3			
2			
1			

MARICOPA COUNTY

NORTHERN PARKWAY
103RD AVENUE TO 91ST AVENUE - PHASE 1
PROJECT NO. TT0372

	BY	DATE
DESIGNED	DM/EN/AL	5/6/2026
DRAWN	J2CAD	5/6/2026
CHECKED	SP	5/6/2026

Registered Landscape Architect CERTIFICATE NO. 34191 J. SETH PLACKO Date Signed 05/06/26 ARIZONA U.S.A.

J2 Design

99TH AVENUE - LANDSCAPE PLAN
STA 13+90 TO 16+00

SHEET LS07

TRACS NO.

Contact Arizona 811 Two Working Days Before You Dig
ARIZONA811 BLUE STAKE, INC.
Call 811 or Click Arizona811.com

c:\bmstyl\i-pw\splacko__j2design\057307\TT0372_SC_Landscape_LS07.dgn
OpenRoads_Imperial 4:51:20 PM 5/6/2026 MCDOT_TYLIN_PRINT.tbl TYLI_GN_bwpdf.pltcfg

F.H.W.A. REGION	STATE	PROJECT NO.	SHEET NO.	TOTAL SHEETS	RECORD DRAWING
9	AZ	TT0372	206	224	

PEORIA GENERAL IRRIGATION NOTES:

1. ALL IRRIGATION EQUIPMENT TO BE INSTALLED PER IRRIGATION DETAILS AND PER MANUFACTURER'S SPECIFICATIONS.
2. ALL ITEMS TO BE BID AS NOTED OR AS AN APPROVED EQUAL. NO SUBSTITUTIONS SHALL BE ALLOWED UNLESS PRIOR APPROVAL IS OBTAINED IN WRITING FROM THE OWNER'S REPRESENTATIVE.
3. ALL VALVE BOXES SHALL INCLUDE STAINLESS STEEL BOLT-DOWN OR LOCKABLE T-STYLE COVERS WITH EMBOSSED LETTERS AS NOTED IN DETAILS (EXCEPT EMITTER BOXES). VALVE BOXES AND COVERS SHALL BE TAN COLOR.
4. CONTRACTOR TO INSTALL TRACER WIRE ON ALL IRRIGATION MAINLINE.
5. EXISTING ON-SITE IRRIGATION SYSTEM SHALL REMAIN PROTECTED IN PLACE UNLESS OTHERWISE NOTED OTHERWISE ON PLANS.

PEORIA EMITTER NOTES

1. SEE 'EMITTER SCHEDULE FOR EMITTER FLOWS & QUANTITIES PER PLANT. SEE EMITTER DETAILS FOR REQUIRED LAYOUT.
2. DO NOT SUBSTITUTE SINGLE PORT EMITTERS FOR MULTI PORT EMITTERS. INSTALL EMITTERS PER EMITTER SCHEDULE ONLY.
3. LOCATE ALL EMITTERS UPHILL OF PLANT WHEN ON A SLOPE.
4. ALL TREE EMITTER (DISTRIBUTION) TUBES SHALL BE VISIBLE AND CUT 1" MINIMUM TO 2" MAXIMUM ABOVE FINISH GRADE OF DECOMPOSED GRANITE AS SHOWN PER DETAIL.
5. ALL SHRUB / ACCENT SINGLE EMITTERS SHALL BE VISIBLE WITH EMITTER INSTALLED ABOVE FINISH GRADE OF DECOMPOSED GRANITE AS SHOWN PER DETAIL.
6. ALL MULTI-PORT EMITTERS ARE TO BE INSTALLED IN EMITTER BOXES TO ALLOW FUTURE SERVICE. DO NOT KINK EMITTER TUBES.

IRRIGATION RESTORATION AREA NOTE:

THE CONTRACTOR SHALL CUT & CAP, RECONNECT, REROUTE, OR REPLACE THE EXISTING IRRIGATION SYSTEM TO ALL DISTURBED AREA DUE TO NEW CONSTRUCTION. PRIOR TO ANY CONSTRUCTION ACTIVITIES, THE GENERAL CONTRACTOR SHALL STAKE AREAS THAT ARE DESIGNATED TO BE DISTURBED. CONTRACTOR SHALL ADD ANY EQUIPMENT NECESSARY TO GUARANTEE 100% COVERAGE TO ALL EXISTING PLANT MATERIAL. THE GENERAL CONTRACTOR AND CITY REPRESENTATIVE IS TO INSPECT THE EXISTING IRRIGATION SYSTEM IS FULLY FUNCTIONAL PRIOR TO ANY CONSTRUCTION. IF THE IRRIGATION SYSTEM IS DEEMED FAULTY OR INSUFFICIENT, A MEETING ON SITE WITH CITY OR ADOT STAFF, AND THE CONTRACTOR WILL BE HELD TO EVALUATE THE SPECIFIC CONDITION. THE GENERAL CONTRACTOR SHALL BE REQUIRED TO REPAIR AND OR REPLACE ALL DISTURBED OR DAMAGED IRRIGATION COMPONENTS RETURNING THEIR OPERATION TO 100%. GENERAL CONTRACTOR SHALL ENSURE THAT ALL RECONNECTIONS (WATER & POWER) HAVE BEEN TESTED AND APPROVED BY THE CITY PRIOR TO BACKFILLING. PRIOR TO FINAL ACCEPTANCE AND DURING THE MAINTENANCE PERIOD SPECIFIED THE GENERAL CONTRACTOR AND CITY FIELD ENGINEER SHALL MEET AGAIN AND ENSURE THAT EACH SYSTEM HAS BEEN RETURNED TO A FULLY OPERATIONAL AND FUNCTIONAL SYSTEM AND THAT ANY DEFICIENCIES HAVE BEEN CORRECTED. ALL WORK SHALL COMPLY WITH THESE PLANS AND SPECIAL PROVISIONS. THE COST OF THIS WORK IS CONSIDER INCLUDED IN THE COST OF LANDSCAPE AND IRRIGATION RESTORATION.

EMITTER SCHEDULE

SYM:	SPECIES:	QUANTITY / TYPE	OUTLETS / VOLUME
TREES			
	Acacia aneura Mulga	1 / MULTI	4 / 2 GPH
	Caesalpinia mexicana Mexican Bird of Paradise	1 / MULTI	4 / 2 GPH
	Chilopsis linearis 'Art's Seedless' Seedless Desert Willow	1 / MULTI	6 / 2 GPH
	Existing Tree Protect in Place	1 / MULTI	6 / 2 GPH
SHRUBS			
	Caesalpinia pulcherrima Red Bird of Paradise	1 / MULTI	2 / 1 GPH
ACCENTS			
	Asclepias subulata Desert Milkweed	1 / MULTI	1 / 1.0 GPH
	Dasylirion wheeleri Desert Spoon	1 / MULTI	1 / 1.0 GPH
	Euphorbia antisyphilitica Candelilla	1 / MULTI	1 / 0.5 GPH
	Hesperaloe funifera Giant Hesperaloe	1 / MULTI	1 / 1.0 GPH
	Hesperaloe x Perfu Pink Parade Hesperaloe	1 / MULTI	1 / 1.0 GPH

IRRIGATION LEGEND

DETAIL:	SYMBOL:	DESCRIPTION:	PROJECT QUANTITIES:
	M	EXISTING WATER METER PROTECT IN PLACE	N/A
	B	EXISTING BACKFLOW ASSEMBLY PROTECT IN PLACE	N/A
	M	RELOCATED WATER METER - RELOCATE AND INSTALL WATER METERS PER CITY OF GLENDALE STD DTL 642- SEE SHEET IR05 FOR NEW WATER METER LOCATION AND SHEET IR06 FOR EXISTING WATER METER LOCATION.	RELOC 1.5" = 1
1 ID02 / 2 ID02	B	NEW GLENDALE BACKFLOW PREVENTER ASSEMBLY (1.5")- INSTALL PER CITY OF GLENDALE STD DTL G-669 & G-673	1.5" = 1
	NOT SHOWN	HUNTER NODE-200 2-STATION BATTERY OPERATED CONTROLLER. WIRE TO EXISTING VALVE USING 3M DIRECT BURY SPLICE KIT DBR/Y-6 WIRE CONNECTORS.	2 EA
3 ID02		DRIP REMOTE CONTROL VALVE ASSEMBLY (COP): 1" RAINBIRD DRIP CONTROL ZONE KIT #XCZ-100-PRB-LC WITH FLOW RANGE OF 0.3 - 20 GPM = 1" PEB SERIES VALVE WITH GLASS FILLED NYLON GLOBE STYLE BODY; 1" PRESSURE REGULATING BASKET SET TO 40 PSI WITH 200 MESH STAINLESS STEEL SCREN; SPEARS #2000 INDUSTRIAL SERIES PVC TRUE UNION FULL PORT BALL VALVE WITH SxS CONNECTIONS RATED TO 235 PSI; CHRISTY'S MAXI YELLOW SINGLE SIDED ID TAG WITH CONTROLLER LETTER-STATION #-VALVE TYPE INFO WRITTEN ON SIDE BY CONTRACTOR; CONTROL WIRES TO MATCH EXISTING WIRES. WIRE CONNECTORS TO BE 3M DBR/Y; INSTALL GLENDALE VALVES IN CARSON #1324 SUPER JUMBO TAN COLOR VALVE BOX WITH BOLT DOWN T-COVER; INSTALL PEORIA VALVE IN RAINBIRD STANDARD SERIES GOLF VALVE BOX WITH BOLT DOWN LID. EMBOSSED WITH SAME CONTROLLER LETTER-STATION #-VALVE TYPES INFO AS ON ID TAG	1.0" AC = 2 EA
		EXISTING REMOTE CONTROL VALVE ASSEMBLY: PROTECT IN PLACE	N/A
4 ID02	NOT SHOWN	SINGLE-OUTLET EMITTER (COP): HUNTER SINGLE PORT PRESSURE COMPENSATING EMITTER #HEB-05-BR BLUE COLOR 0.5 GPH FLOW OR #HBE-10-BR BLACK COLOR 1.0 GPH FLOW WITH 1/2" FPT INLET; DIRECT BURY INSTALLED ON 1/2" PVC FLEX RISER (NO EMITTER TUBE) - LOCATE PER DETAIL (SEE 'EMITTER SCHEDULE' THIS SHEET FOR REQ'D FLOWS TO EACH PLANT SPECIES)	112 EA
5 ID03	NOT SHOWN	MULTI-OUTLET EMITTER (COP & COG): HUNTER SIX PORT PRESSURE COMPENSATING EMITTER #MPE-20 RED COLOR 2.0 GPH FLOW EACH OUTLET WITH 1/2" FPT INLET; INSTALL ON 1/2" PVC FLEX RISER; INSTALL IN NDS #107BC 6" ROUND SAND COLOR EMITTER BOX; EMITTER (DISTRIBUTION) TUBES SHALL BE VINYL	18 EA
6 ID03		DRIP LATERAL FLUSH END CAP ASSEMBLY (COP & COG): 3/4" FLEX RISER WITH PVC SCH 40 MALE ADAPTER (3/4 MHT x 3/4 SLIP) WITH 3/4" SCH 40 PVC FHT THREADED CAP; IN 10" ROUND CARSON #910 TAN COLOR VALVE BOX WITH BOLT DOWN T-COVER - TWO FLUSH CAPS MAY SHARE SAME VALVE BOX IF LOCATED IN SAME VICINITY	N/A
7 ID03	X"C	IRRIGATION MAINLINE PIPE (COP & COG): WHITE COLOR SCHEDULE 40 PVC SOLVENT WELD WITH SCHEDULE 80 PVC FITTINGS , SIZE PER PLAN	1.5" = 1,317 LF
	S	SHRUB / ACCENT DRIP LATERAL PIPE (COG): 3/4" STANDARD WHITE COLOR SCHEDULE 40 PVC SOLVENT WELD WITH SCHEDULE 40 PVC FITTINGS	935 LF
	T	TREE DRIP LATERAL PIPE (COP, COG & MAG): 3/4" STANDARD WHITE COLOR SCHEDULE 40 PVC SOLVENT WELD WITH SCHEDULE 40 PVC FITTINGS	543 LF
8 ID03	PS #	PIPE SLEEVES (PS): 3" & 6" SLEEVES SHALL BE STANDARD WHITE COLOR SCHEDULE 40 PVC, 12" SLEEVE TO BE CORREGATED HDPE WITH SMOOTH INSIDE SURFACE. INSTALL AT DEEPEST PIPE DEPTH WITHIN TRENCH OR AT 36" MINIMUM COVER WHEN UNDER VEHICULAR DRIVING SURFACE- SEE SLEEVE SUMMARY SHEET ID31 FOR SLEEVE MATERIAL & SIZE	3" = 14 LF 6" = 340 LF

NOTES:
1. INSTALL NEW CONTROL WIRES AT 18" MINIMUM COVER WITH 3" WIDE WHITE COLOR DETECTABLE MARKING TAPE AT 12"-15" DEPTH.

VALVE KEY LEGEND:

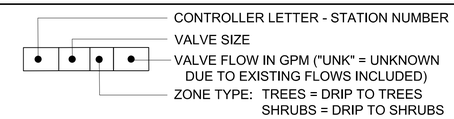

COP = CITY OF PEORIA
COG = CITY OF GLENDALE

NO.	REVISION	BY	DATE
3			
2			
1			

MARICOPA COUNTY

NORTHERN PARKWAY
103RD AVENUE TO 91ST AVENUE - PHASE 1
PROJECT NO. TT0372

Registered Landscape Architect CERTIFICATE NO. 34191 J. SETH PLACKO Date Signed 4/9/26 Expires 12/31/27 ARIZONA U.S.A.

	BY	DATE
DESIGNED	DM/EN/AL	5/6/2026
DRAWN	J2CAD	5/6/2026
CHECKED	SP	5/6/2026

J2 Design

NORTHERN AVENUE
IRRIGATION NOTES & EMITTER SCHEDULE

SHEET ID01

TRACS NO.

c:\bmstlyli-pw\splacko__j2design\d0573076\TT0372_SS_Landscape_Irrigation_ID01.dgn
OpenRoads_Imperial 4:40:37 PM 5/6/2026 MCDOT_TYLIN_PRINT.tbl TYLI_GN_bwpdf.pltcfg

F.H.W.A. REGION	STATE	PROJECT NO.	SHEET NO.	TOTAL SHEETS	RECORD DRAWING
9	AZ	TT0372	207	224	

GENERAL NOTES

1. CONTACT CITY OF GLENDALE CROSS CONNECTION CONTROL FOR LATEST LIST OF APPROVED BACKFLOW PREVENTION ASSEMBLIES OR CERTIFIED TESTERS.
2. BACKFLOW PREVENTERS MUST BE TESTED BY A CERTIFIED TESTER BEFORE A CERTIFICATE OF OCCUPANCY IS ISSUED, SEE CROSS CONNECTION WEBSITE FOR APPROVED TESTING COMPANIES.
3. COPPER FITTINGS SHALL BE CONNECTED WITH LEAD FREE SOLDER JOINTS.
4. SEE C.O.G. STD. DETAIL G-673 FOR METAL CAGE DETAILS.
5. CALL FOR UNDERGROUND INSPECTION BEFORE BACKFILLING TRENCH .
6. BACKFLOW PREVENTERS SHALL BE PAINTED TAN, ROYAL BLUE OR THE COLOR TO MATCH THE BUILDING. DO NOT PAINT NAME PLATE.

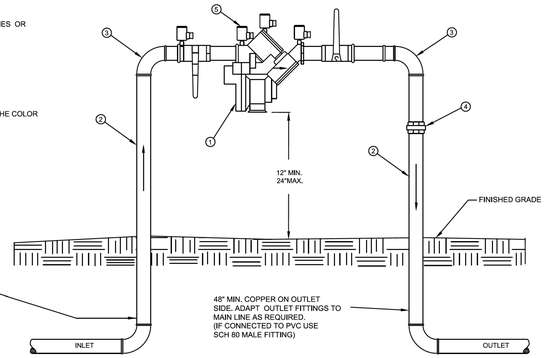

LIST OF MATERIALS

1. APPROVED REDUCED PRESSURE PRINCIPLE BACKFLOW PREVENTION ASSEMBLY, BALL VALVES INCLUDED.
2. PIPE SPOOL, TYPE "K" HARD COPPER, 3/4" THRU 2 1/2".
3. 90° ELL, COPPER, 3/4" THRU 2 1/2".
4. PIPE UNION, BRASS OR COPPER.
5. TEST COCKS WITH BRASS PLUGS OR ADAPTER WITH CAPS INSTALLED (4 REQUIRED).

CITY OF GLENDALE STANDARD DETAIL	REDUCED PRESSURE PRINCIPLE BACKFLOW PREVENTION ASSEMBLY 2-1/2 INCHES AND LESS	
APPROVED BY: CITY ENGINEER David D. Beard, P.E.	DATE : 9/15/2014 REVISED: MARCH 2014	DETAIL NO. G-669

1 REDUCED PRESSURE BACKFLOW PREVENTOR (COG)

NTS

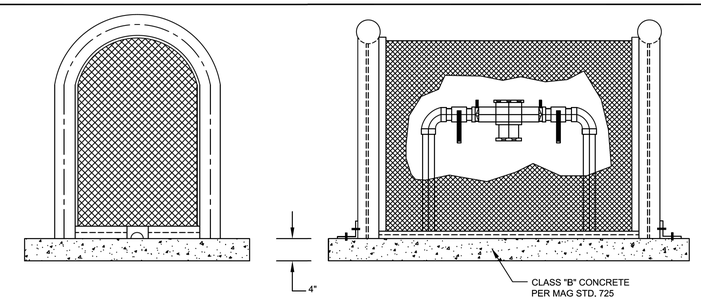

1. SET EYEBOLT WITH BOTTOM OF CIRCLE FLUSH WITH CONCRETE BASE, THEN EYEBOLT CANNOT BE TURNED WHEN BRACKET IS IN PLACE.
2. BOLT BRACKETS TO ENCLOSURE ON ENDS OR BOTH SIDES. USE 1/4" x 1 1/4" TAMPER-PROOF BOLTS WITH HEX NUTS AND WASHERS PROVIDED.
3. PAD DIMENSIONS SHALL ALLOW 6" MIN. CLEARANCE FROM ANY DRILLED ANCHOR BOLTS TO EDGE OF CONCRETE PAD.
4. CAGE SHALL BE PAINTED TO MATCH COLOR OF NEAREST WALL OR BE PAINTED GREEN.
5. ALL BFPU'S (DOMESTIC OR LANDSCAPE) SHALL BE CAGED.

CITY OF GLENDALE STANDARD DETAIL	METAL CAGE FOR REDUCED PRESSURE PRINCIPLE BACKFLOW PREVENTION ASSEMBLY 2 1/2" OR LESS	
APPROVED BY: CITY ENGINEER David D. Beard, P.E.	DATE : 9/15/2014 REVISED: MARCH 2014	DETAIL NO. G-673

2 PRESSURE BACKFLOW PREVENTOR CAGE (COG)

NTS

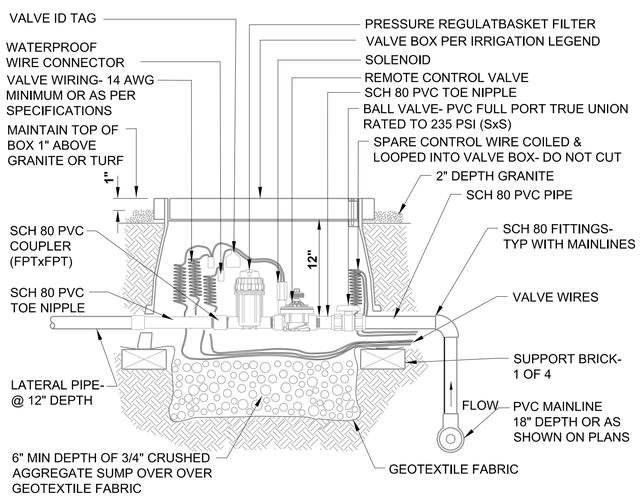

NOTES:
1. PROVIDE EQUIPMENT PER IRRIGATION SUMMARY.
2. PROVIDE EXPANSION COILS AT EACH IN VALVE BOX (WRAP AROUND 1/2" PIPE 15 TIMES).
3. EMBOSS COVER OF VALVE BOX WITH 2" LETTERS/NUMBERS OF CONTROLLER LETTER - VALVE STATION NO. - VALVE TYPE (IE: A-1-T).
4. FOR MAINLINE PIPE SIZES 4" AND LARGER, INSTALL DEEP BELL DUCTILE IRON GASKETED SERVICE TEE FOR MAINLINE CONNECTIONS.
5. VALVE BOX TO BE TAN IN GRANITE, GREEN IN TURF, OR PURPLE WHEN USED WITH NON-POTABLE WATER SUPPLY.
6. ALL GEOTEXTILE FABRIC SHALL BE NON-WOVEN CLASS 'B' PER MAG SECTION 796.2.2.

3 DRIP REMOTE CONTROL VALVE ASSEMBLY (COP)

NTS

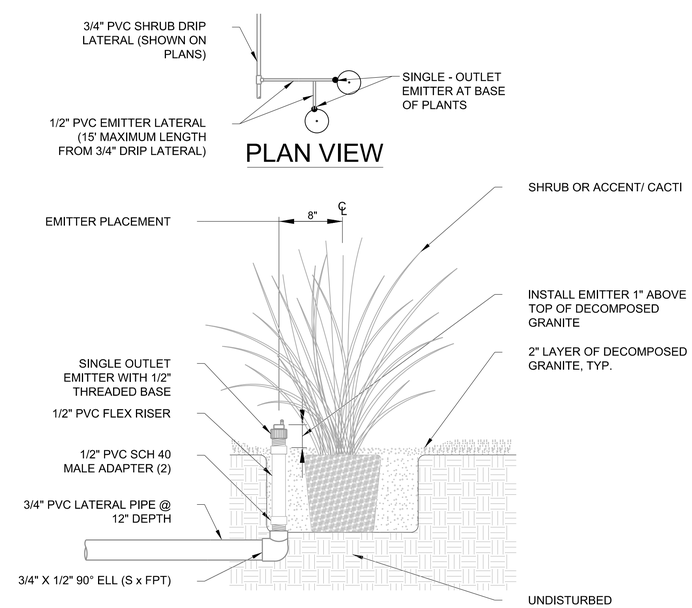

NOTES:
1. SEE 'EMITTER SCHEDULE' FOR QUANTITY OF EMITTERS AND VOLUME FOR EACH SHRUB AND ACCENT/CACTI.
2. PLACE EMITTERS WITHIN 8 INCHES OF THE ROOTBALL.

4 SINGLE OUTLET EMITTER ASSEMBLY (COP)

NTS

Contact Arizona 811 Two Working Days Before You Dig
Call 811 or Click Arizona811.com

NO.	REVISION	BY	DATE
3			
2			
1			

MARICOPA COUNTY

NORTHERN PARKWAY
103RD AVENUE TO 91ST AVENUE - PHASE 1
PROJECT NO. TT0372

	BY	DATE
DESIGNED	DM/EN/AL	5/6/2026
DRAWN	J2CAD	5/6/2026
CHECKED	SP	5/6/2026

Registered Landscape Architect CERTIFICATE NO. 34191 J. SETH PLACKO Date Signed 05/06/26 ARIZONA U.S.A.

J2 Design

NORTHERN AVENUE
LANDSCAPE IRRIGATION DETAILS

SHEET ID02

TRACS NO.

c:\bmstyli-pw\splacko___j2design\0573076\TT0372_SD_Landscape_Irrigation_ID02.dgn
c:\bmstyli-pw\splacko___j2design\0573076\TT0372_SD_Landscape_Irrigation_ID02.dgn
OpenRoads_Imperial 4:40:46 PM 5/6/2026 MCDOT_TYLIN_PRINT.tbl TYLI_GN_bwpdf.pltcfg

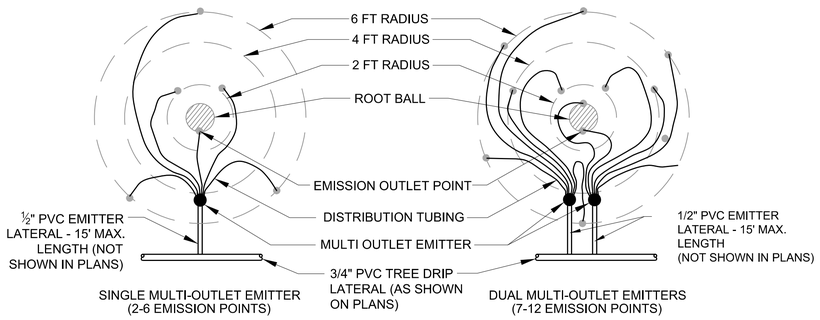

EMISSION POINT LAYOUT PLAN VIEW

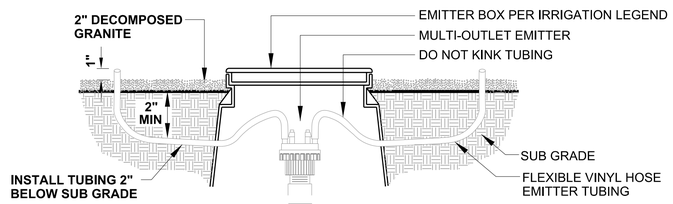

NOTES:
1. EMITTER TUBING EMISSION POINTS SHALL BE EQUALLY SPACED AND LOCATED TO DIRECT WATER FLOW PER LAYOUT DETAIL ABOVE.
2. NUMBER OF OPENINGS AND EMITTER TUBES REQUIRED IS BASED ON PLANT TYPE - SEE 'EMITTER SCHEDULE'.
3. MAXIMUM EMITTER TUBING LENGTH = 10'.
4. LOCATE EMISSION POINTS UPHILL OF PLANT ROOTBALL WHEN ON SLOPES.
5. BURY ALL EMITTER TUBING 2" BELOW FINISH SUBGRADE.

5 MULTI-OUTLET EMITTER ASSEMBLY (COP, COG & MAG)

NTS

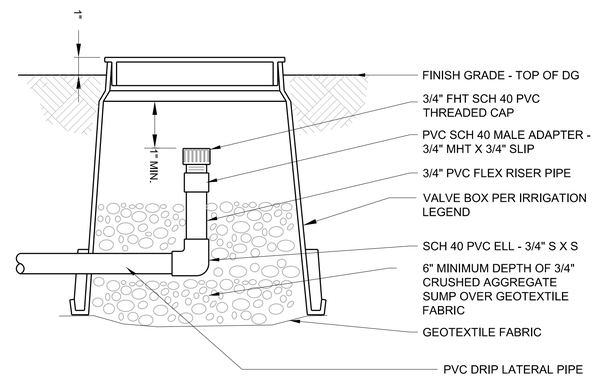

NOTES:
1. EMBOSS COVER WITH "FC" IN 2-INCH HIGH STENCIL LETTERS USING HEAT-BRAND
2. ALL GEOTEXTILE FABRIC SHALL BE NON-WOVEN CLASS 'B' PER MAG SECTION 796.2.2.

6 DRIP LATERAL FLUSH END CAP ASSEMBLY (COP & COG)

NTS

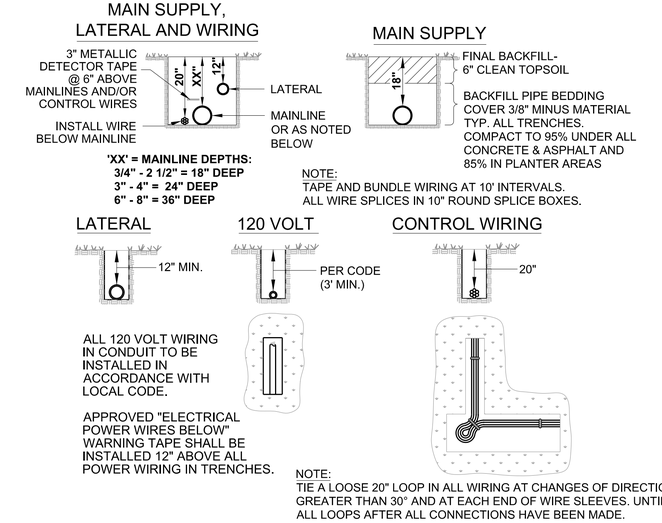

NOTES:
1. NO TRENCH TO BE CLOSER THAN 18" TO CONCRETE SIDEWALK, CURBS, ELECTRIC POLES, J-BOXES, ELECTRIC CABINETS, STREET SIGNALS, SIGNS, ETC.
2. WHEN MULTIPLE MAIN OR LATERAL LINES RUN IN THE SAME TRENCH MAINTAIN 3" HORIZONTAL CLEARANCE BETWEEN PIPES.

7 TRENCHING DETAIL (COP, COG & MAG)

NTS

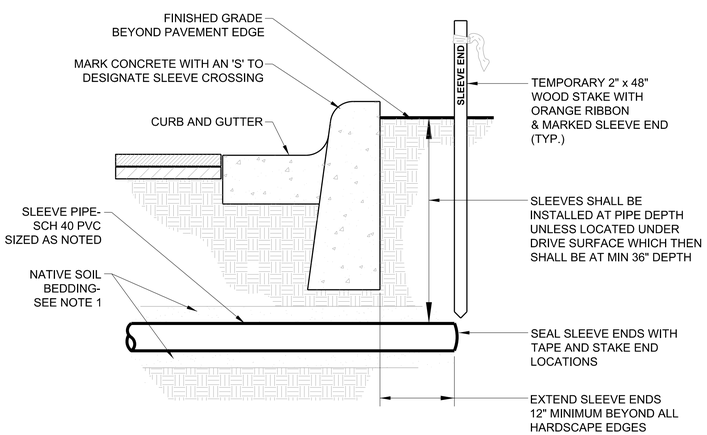

NOTES:
1. BACKFILL TRENCH WITH NATIVE SOIL BEDDING 3" UNDER SLEEVE AND 3" ABOVE SLEEVE. BEDDING MATERIAL SHALL NOT HAVE ANY ROCKS LARGER THAN 1/4" DIA.
2. WHEN INSTALLING A NEW IRRIGATION SLEEVE UNDER PROPOSED CONCRETE CURB AND SIDEWALK, THE CONTRACTOR SHALL STAMP A 4" TALL X 1/4" DEEP "S" INTO THE FRESHLY POURED CONCRETE TO DESIGNATE AN IRRIGATION SLEEVE CROSSING.

8 SLEEVE INSTALLATION (COP, COG & MAG)

NTS

Contact Arizona 811 Two Working Days Before You Dig
Call 811 or Click Arizona811.com

NO.	REVISION	BY	DATE
3			
2			
1			

MARICOPA COUNTY

NORTHERN PARKWAY
103RD AVENUE TO 91ST AVENUE - PHASE 1
PROJECT NO. TT0372

	BY	DATE
DESIGNED	DM/EN/AL	5/6/2026
DRAWN	J2CAD	5/6/2026
CHECKED	SP	5/6/2026

Registered Landscape Architect CERTIFICATE NO. 34191 J. SETH PLACKO Date Signed 05/06/26 Not valid until signed. ARIZONA, U.S.A.

J2 Design

NORTHERN AVENUE
LANDSCAPE IRRIGATION DETAILS

SHEET ID03

TRACS NO.

TYLI_GN_bwpdf.pltcfg
MCDOT_TYLIN_PRINT.tbl
4:40:57 PM 5/6/2026
OpenRoads_Imperial
c:\bmsl\tyli-pw\splacko__j2design\d0573076\TT0372_SD_Landscape_Irrigation_ID03.dgn

F.H.W.A. REGION	STATE	PROJECT NO.	SHEET NO.	TOTAL SHEETS	RECORD DRAWING
9	AZ	TT0372	209	224	

NOTE:
THE ZEROS IN PARENTHESES (0, 0.0 & 0.000) INDICATE THE DIMENSIONAL PRECISION FOR THAT COLUMN

NOTE:
PIPE OPTIONS SELECTED ARE THOSE REQUIRED TO MEET MINIMUM SERVICE LIFE.
ALLOWABLE PIPE OPTIONS ARE INDICATED WITH THE LETTER 'X' IN THE SPACE. BLANK SPACES ARE NOT ALLOWABLE ALTERNATES.

CSP - CORRUGATED STEEL PIPE
CAP - CORRUGATED ALUMINUM PIPE
BSP - BLACK STEEL PIPE
CHDPEP - CORRUGATED HIGH-DENSITY POLYETHYLENE PIPE

| DESCRIPTION | | |

F.H.W.A. REGION	STATE	PROJECT NO.	SHEET NO.	TOTAL SHEETS	RECORD DRAWING
9	AZ	TT0372	210	224	

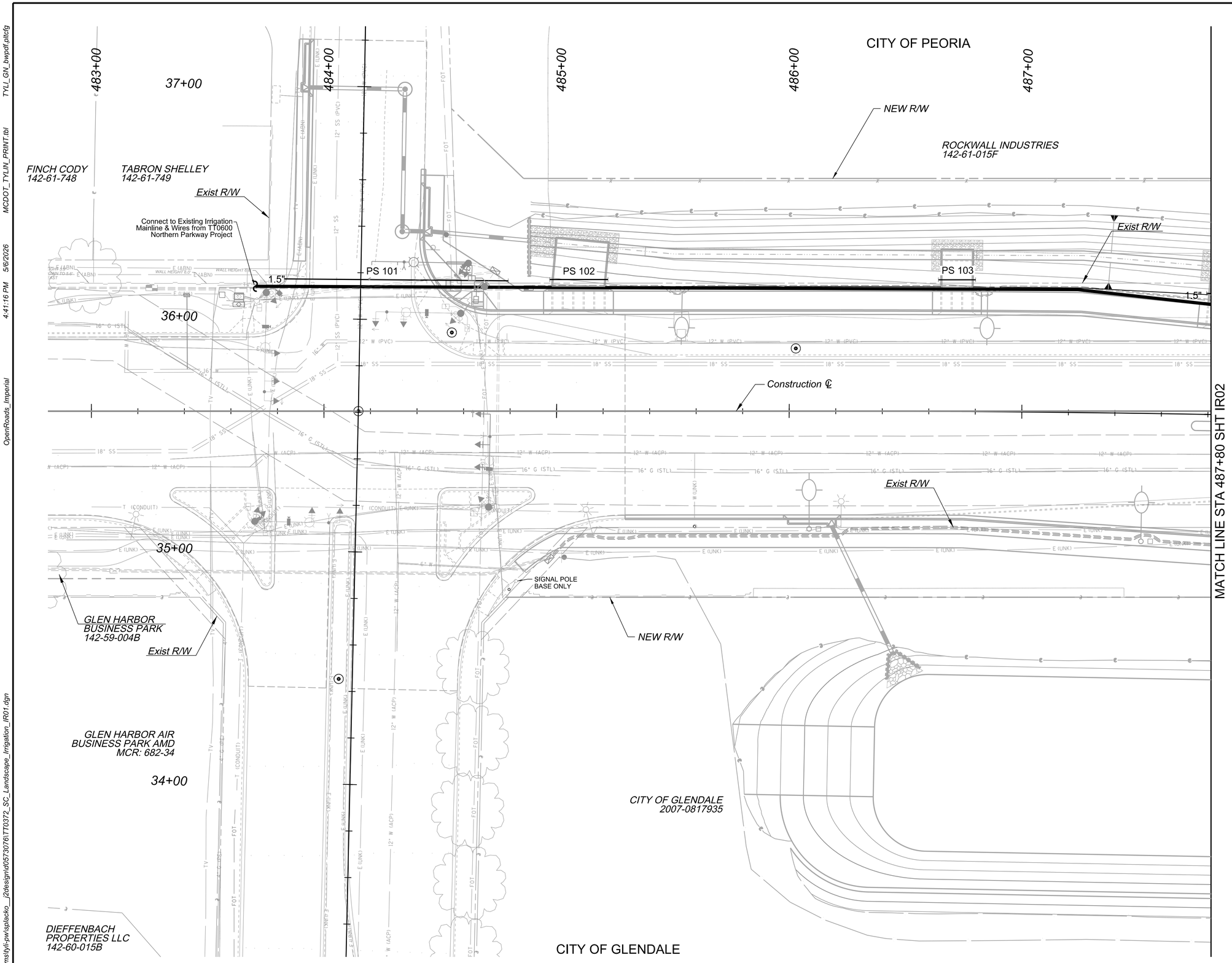

MATCH LINE STA 487+80 SHT IR02

IRRIGATION LEGEND

SYMBOL	DESCRIPTION
M	RELOCATED WATER METER
B	REDUCE PRESSURE BACKFLOW PREVENTER ASSEMBLY
NOT SHOWN	BATTERY OPERATED CONTROLLER
	EXISTING DRIP REMOTE CONTROL VALVE ASSEMBLY- PROTECT IN PLACE
	CITY DRIP REMOTE CONTROL VALVE ASSEMBLY
NOT SHOWN	MULTI-OUTLET EMITTER ASSEMBLY
	SINGLE-OUTLET EMITTER ASSEMBLY
	CITY DRIP LATERAL FLUSH END CAP ASSEMBLY
X"	CITY MAINLINE PIPE: (AS NOTED)
	SHRUB/ACCENT DRIP LATERAL PIPE: 3/4" SCH 40 PVC
	TREE DRIP LATERAL PIPE: 3/4" SCH 40 PVC
PS#	PIPE SLEEVES (PS)

SCALE: Hor: 1"=20'
Vert: N/A

20 0 20 40
SCALE IN FEET

Contact Arizona 811 Two Working Days Before You Dig
Call 811 or Click Arizona811.com

NO.	REVISION	BY	DATE
3			
2			
1			

MARICOPA COUNTY

NORTHERN PARKWAY
103RD AVENUE TO 91ST AVENUE - PHASE 1
PROJECT NO. TT0372

	BY	DATE
DESIGNED	DM/EN/AL	5/6/2026
DRAWN	J2CAD	5/6/2026
CHECKED	SP	5/6/2026

Registered Landscape Architect
CERTIFICATE NO.
34191
J. SETH PLACKO
Date Signed 05/06/26
ARIZONA U.S.A.

J2 Design

NORTHERN AVENUE - IRRIGATION PLAN
STA 482+80 TO 487+80

SHEET IR01

TRACS NO.

c:\bmstyl\j-pw\splacko__j2design\057306\TT0372_SC_Landscape_Irrigation_IR01.dgn
OpenRoads_Imperial 4:41:16 PM 5/6/2026 MCDOT_TYLIN_PRINT.tbl TYLI_GN_bwpdf.pltcfg

F.H.W.A. REGION	STATE	PROJECT NO.	SHEET NO.	TOTAL SHEETS	RECORD DRAWING
9	AZ	TT0372	211	224	

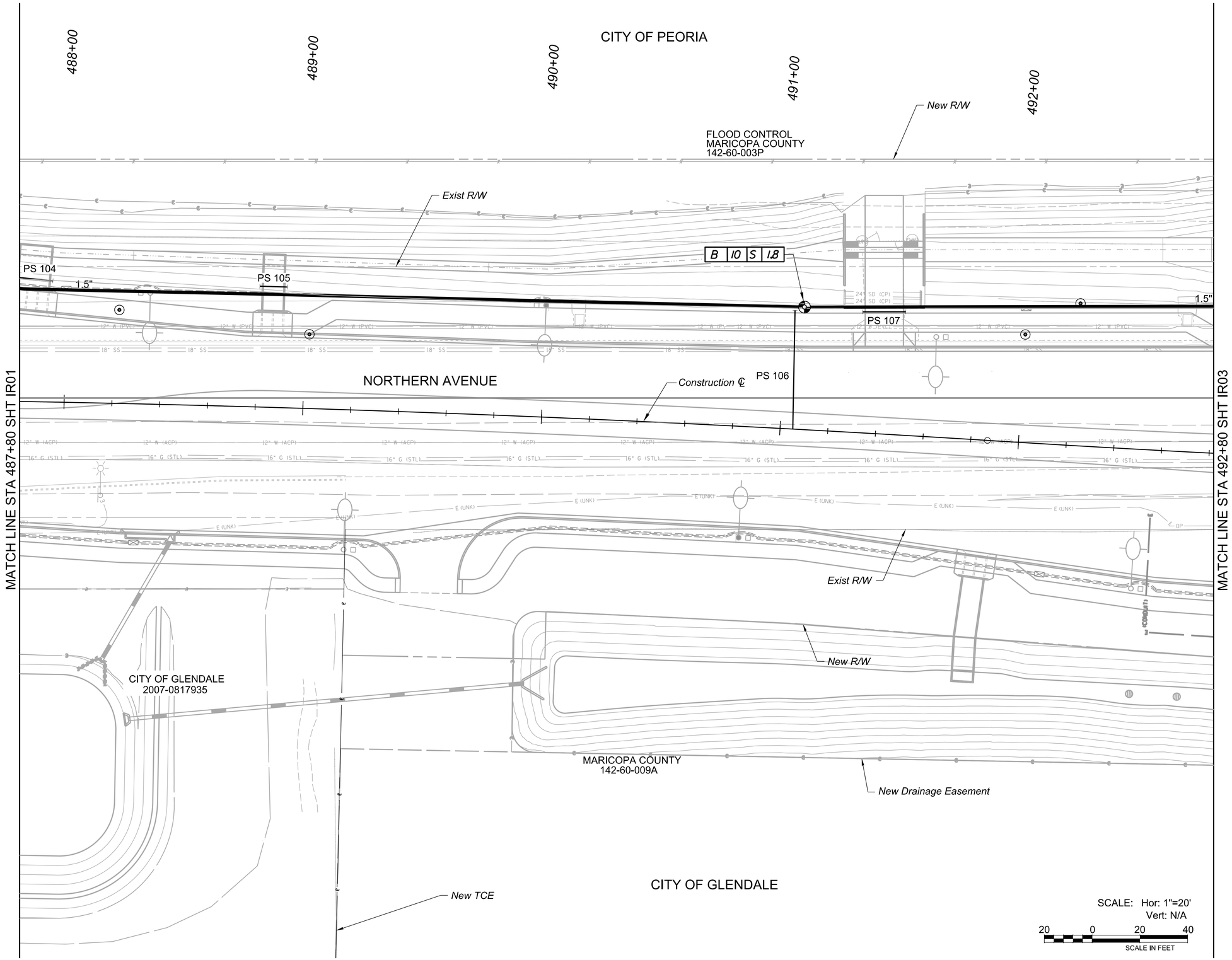

IRRIGATION LEGEND

SYMBOL	DESCRIPTION
M	RELOCATED WATER METER
B	REDUCE PRESSURE BACKFLOW PREVENTER ASSEMBLY
NOT SHOWN	BATTERY OPERATED CONTROLLER
	EXISTING DRIP REMOTE CONTROL VALVE ASSEMBLY- PROTECT IN PLACE
	CITY DRIP REMOTE CONTROL VALVE ASSEMBLY
NOT SHOWN	MULTI-OUTLET EMITTER ASSEMBLY
	SINGLE-OUTLET EMITTER ASSEMBLY
	CITY DRIP LATERAL FLUSH END CAP ASSEMBLY
X"	CITY MAINLINE PIPE: (AS NOTED)
	SHRUB/ACCENT DRIP LATERAL PIPE: 3/4" SCH 40 PVC
	TREE DRIP LATERAL PIPE: 3/4" SCH 40 PVC
PS#	PIPE SLEEVES (PS)

Contact Arizona 811 Two Working Days Before You Dig
Call 811 or Click Arizona811.com

NO.	REVISION	BY	DATE
3			
2			
1			

MARICOPA COUNTY

NORTHERN PARKWAY
103RD AVENUE TO 91ST AVENUE - PHASE 1
PROJECT NO. TT0372

	BY	DATE
DESIGNED	DM/EN/AL	5/6/2026
DRAWN	J2CAD	5/6/2026
CHECKED	SP	5/6/2026

Registered Landscape Architect CERTIFICATE NO. 34191 J. SETH PLACKO Date Signed 5/6/26 ARIZONA U.S.A.

J2 Design

NORTHERN AVENUE - IRRIGATION PLAN
STA 487+80 TO 492+80

SHEET IR02

TRACS NO.

c:\bmstyli-pw\splacko__j2design\d0573076\TT0372_SC_Landscape_Irrigation_IR02.dgn
OpenRoads_Imperial 4:41:29 PM 5/6/2026 MCDOT_TYLIN_PRINT.tbl TYLI_GN_bwpdf.pltcfg

F.H.W.A. REGION	STATE	PROJECT NO.	SHEET NO.	TOTAL SHEETS	RECORD DRAWING
9	AZ	TT0372	212	224	

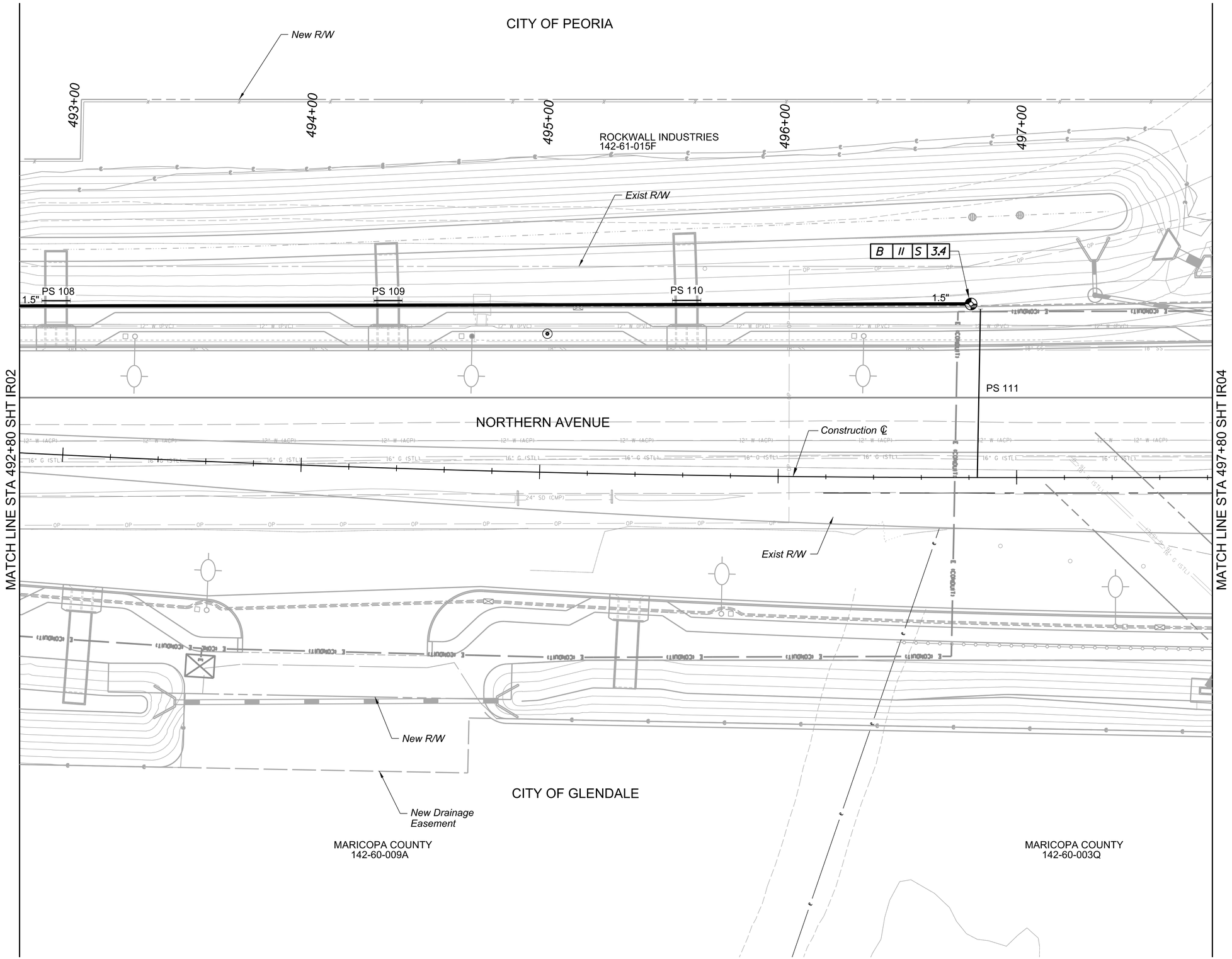

IRRIGATION LEGEND

SYMBOL	DESCRIPTION
M	RELOCATED WATER METER
B	REDUCE PRESSURE BACKFLOW PREVENTER ASSEMBLY
NOT SHOWN	BATTERY OPERATED CONTROLLER
	EXISTING DRIP REMOTE CONTROL VALVE ASSEMBLY- PROTECT IN PLACE
	CITY DRIP REMOTE CONTROL VALVE ASSEMBLY
NOT SHOWN	MULTI-OUTLET EMITTER ASSEMBLY
	SINGLE-OUTLET EMITTER ASSEMBLY
	CITY DRIP LATERAL FLUSH END CAP ASSEMBLY
X"	CITY MAINLINE PIPE: (AS NOTED)
	SHRUB/ACCENT DRIP LATERAL PIPE: 3/4" SCH 40 PVC
	TREE DRIP LATERAL PIPE: 3/4" SCH 40 PVC
PS#	PIPE SLEEVES (PS)

SCALE: Hor: 1"=20'
Vert: N/A

20 0 20 40
SCALE IN FEET

Contact Arizona 811 Two Working Days Before You Dig
Call 811 or Click Arizona811.com

NO.	REVISION	BY	DATE
3			
2			
1			

MARICOPA COUNTY

NORTHERN PARKWAY
103RD AVENUE TO 91ST AVENUE - PHASE 1
PROJECT NO. TT0372

Registered Landscape Architect
CERTIFICATE NO.
34191
J. SETH PLACKO
Date Signed 5/6/2026
ARIZONA U.S.A.

	BY	DATE
DESIGNED		5/6/2026
DRAWN		5/6/2026
CHECKED		5/6/2026

J2 Design

NORTHERN AVENUE - IRRIGATION PLAN
STA 492+80 TO 497+80

SHEET IR03

TRACS NO.

c:\bmstyli-pw\placko__j2design\d0573076\TT0372_SC_Landscape_Irrigation_IR03.dgn
OpenRoads_Imperial 4:41:38 PM 5/6/2026 MCDOT_TYLIN_PRINT.tbl TYLI_GN_bwpdf.pltcfg

F.H.W.A. REGION	STATE	PROJECT NO.	SHEET NO.	TOTAL SHEETS	RECORD DRAWING
9	AZ	TT0372	213	224	

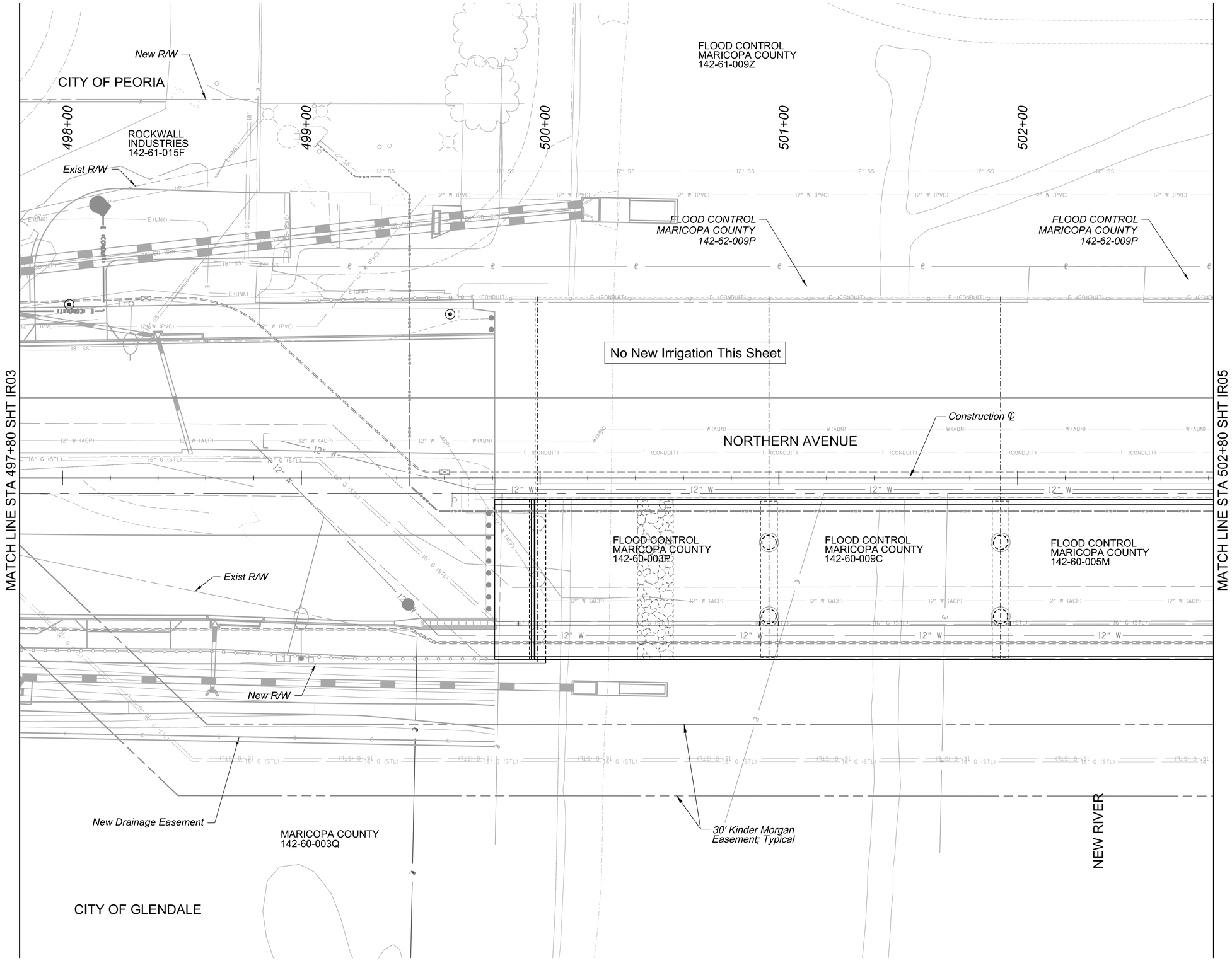

IRRIGATION LEGEND

SYMBOL	DESCRIPTION
M	RELOCATED WATER METER
B	REDUCE PRESSURE BACKFLOW PREVENTER ASSEMBLY
NOT SHOWN	BATTERY OPERATED CONTROLLER
	EXISTING DRIP REMOTE CONTROL VALVE ASSEMBLY- PROTECT IN PLACE
	CITY DRIP REMOTE CONTROL VALVE ASSEMBLY
NOT SHOWN	MULTI-OUTLET EMITTER ASSEMBLY
	SINGLE-OUTLET EMITTER ASSEMBLY
	CITY DRIP LATERAL FLUSH END CAP ASSEMBLY
X"	CITY MAINLINE PIPE: (AS NOTED)
	SHRUB/ACCENT DRIP LATERAL PIPE: 3/4" SCH 40 PVC
	TREE DRIP LATERAL PIPE: 3/4" SCH 40 PVC
PS#	PIPE SLEEVES (PS)

SCALE: Hor: 1"=20'
Vert: N/A

20 0 20 40
SCALE IN FEET

Contact Arizona 811 Two Working Days Before You Dig
Call 811 or Click Arizona811.com

NO.	REVISION	BY	DATE
3			
2			
1			

MARICOPA COUNTY

NORTHERN PARKWAY
103RD AVENUE TO 91ST AVENUE - PHASE 1
PROJECT NO. TT0372

	BY	DATE
DESIGNED		5/6/2026
DRAWN		5/6/2026
CHECKED		5/6/2026

Registered Landscape Architect CERTIFICATE NO. 34191 J. SETH PLACKO Date Signed 5/6/26 ARIZONA U.S.A.

J2 Design

NORTHERN AVENUE - IRRIGATION PLAN
STA 497+80 TO 502+80

SHEET IR04

TRACS NO.

c:\bms\tyli-pw\splacko__j2design\0573076\TT0372_SC_Landscape_Irrigation_IR04.dgn
OpenRoads_Imperial 4:41:49 PM 5/6/2026 MCDOT_TYLIN_PRINT.tbl TYLI_GN_bwpdf.pltcfg

F.H.W.A. REGION	STATE	PROJECT NO.	SHEET NO.	TOTAL SHEETS	RECORD DRAWING
9	AZ	TT0372	214	224	

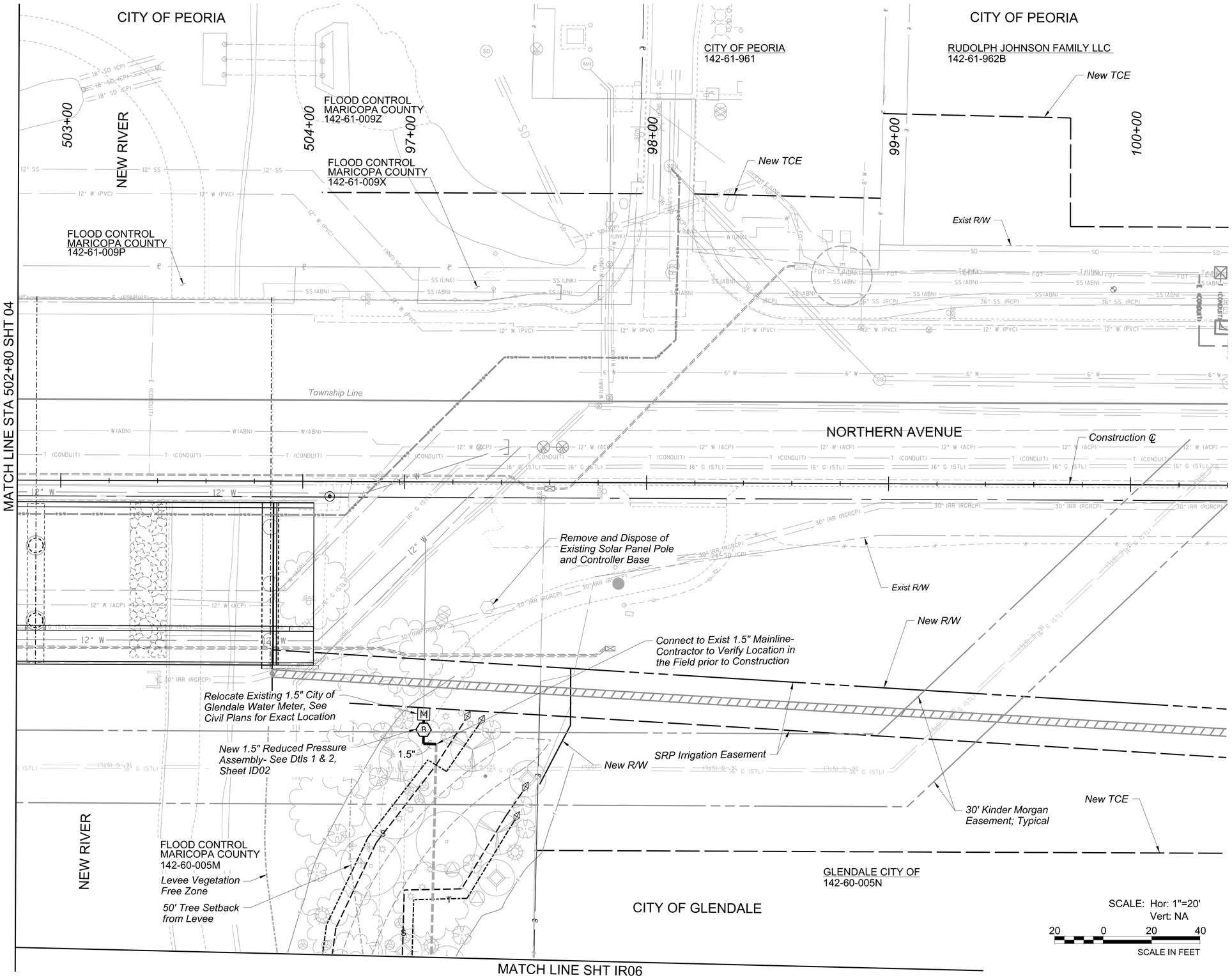

IRRIGATION LEGEND

SYMBOL	DESCRIPTION
M	RELOCATED WATER METER
B	REDUCE PRESSURE BACKFLOW PREVENTER ASSEMBLY
NOT SHOWN	BATTERY OPERATED CONTROLLER
	EXISTING DRIP REMOTE CONTROL VALVE ASSEMBLY- PROTECT IN PLACE
	CITY DRIP REMOTE CONTROL VALVE ASSEMBLY
NOT SHOWN	MULTI-OUTLET EMITTER ASSEMBLY
	SINGLE-OUTLET EMITTER ASSEMBLY
	CITY DRIP LATERAL FLUSH END CAP ASSEMBLY
X"	CITY MAINLINE PIPE: (AS NOTED)
	SHRUB/ACCENT DRIP LATERAL PIPE: 3/4" SCH 40 PVC
	TREE DRIP LATERAL PIPE: 3/4" SCH 40 PVC
PS#	PIPE SLEEVES (PS)

New Water & Electric Meter Chart

Utility	User	Meter Type	Address
Glendale Water	Glendale	Relocate Water Meter 96167592	9991 W. Northern Ave.

Contact Arizona 811 Two Working Days Before You Dig
Call 811 or Click Arizona811.com

NO.	REVISION	BY	DATE
3			
2			
1			

MARICOPA COUNTY

NORTHERN PARKWAY
103RD AVENUE TO 91ST AVENUE - PHASE 1
PROJECT NO. TT0372

	BY	DATE
DESIGNED	DM/EN/AL	5/6/2026
DRAWN	J2CAD	5/6/2026
CHECKED	SP	5/6/2026

Registered Landscape Architect
CERTIFICATE NO. 34191
J. SETH PLACKO
Date Signed 05/06/26
ARIZONA U.S.A.

J2 Design

NORTHERN AVENUE - IRRIGATION PLAN
STA 502+80TO 100+40

SHEET IR05

TRACS NO.

c:\bmstyl\i-pw\splacko__j2design\0573076\TT0372_SC_Landscape_Irrigation_IR05.dgn OpenRoads_Imperial 4:41:58 PM 5/6/2026 MCDOT_TYLIN_PRINT.tbl TYLI_GN_bwpdf.pltcfg

F.H.W.A. REGION	STATE	PROJECT NO.	SHEET NO.	TOTAL SHEETS	RECORD DRAWING
9	AZ	TT0372	215	224	

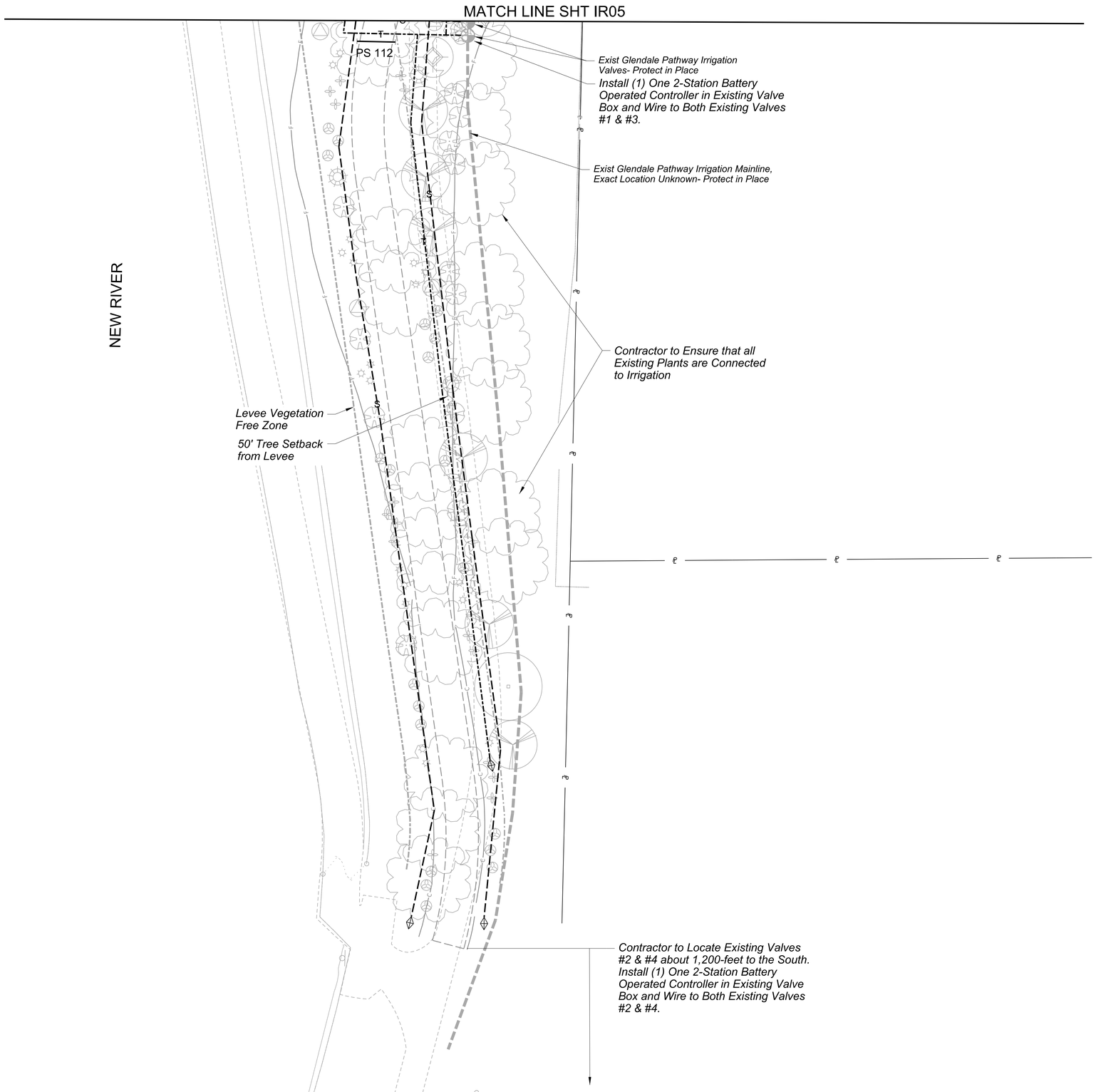

N

IRRIGATION LEGEND

SYMBOL	DESCRIPTION
M	RELOCATED WATER METER
B	REDUCE PRESSURE BACKFLOW PREVENTER ASSEMBLY
NOT SHOWN	BATTERY OPERATED CONTROLLER
	EXISTING DRIP REMOTE CONTROL VALVE ASSEMBLY- PROTECT IN PLACE
	CITY DRIP REMOTE CONTROL VALVE ASSEMBLY
NOT SHOWN	MULTI-OUTLET EMITTER ASSEMBLY
	SINGLE-OUTLET EMITTER ASSEMBLY
	CITY DRIP LATERAL FLUSH END CAP ASSEMBLY
X"	CITY MAINLINE PIPE: (AS NOTED)
	SHRUB/ACCENT DRIP LATERAL PIPE: 3/4" SCH 40 PVC
	TREE DRIP LATERAL PIPE: 3/4" SCH 40 PVC
PS#	PIPE SLEEVES (PS)

SCALE: Hor: 1"=20'
Vert: NA

20 0 20 40
SCALE IN FEET

Contact Arizona 811 Two Working Days Before You Dig
Call 811 or Click Arizona811.com

NO.	REVISION	BY	DATE
3			
2			
1			

MARICOPA COUNTY

NORTHERN PARKWAY
103RD AVENUE TO 91ST AVENUE - PHASE 1
PROJECT NO. TT0372

	BY	DATE
DESIGNED	DM/EN/AL	5/6/2026
DRAWN	J2CAD	5/6/2026
CHECKED	SP	5/6/2026

Registered Landscape Architect CERTIFICATE NO. 34191 J. SETH PLACKO Date Signed 5/6/26 Expires 12/31/27 ARIZONA U.S.A.

J2 Design

NORTHERN AVENUE - IRRIGATION PLAN
STA 95+40 TO 100+40

SHEET IR06

TRACS NO.

c:\bmsltyli-pw\splacko__j2design\d0573076\TT0372_SC_Landscape_Irrigation_IR06.dgn
OpenRoads_Imperial 4:42:07 PM 5/6/2026 MCDOT_TYLIN_PRINT.tbl TYLI_GN_bwpdf.pltcfg

F.H.W.A. REGION	STATE	PROJECT NO.	SHEET NO.	TOTAL SHEETS	RECORD DRAWING
9	AZ	TT0372	216	224	

IRRIGATION LEGEND

SYMBOL	DESCRIPTION
M	RELOCATED WATER METER
B	REDUCE PRESSURE BACKFLOW PREVENTER ASSEMBLY
NOT SHOWN	BATTERY OPERATED CONTROLLER
	EXISTING DRIP REMOTE CONTROL VALVE ASSEMBLY- PROTECT IN PLACE
	CITY DRIP REMOTE CONTROL VALVE ASSEMBLY
NOT SHOWN	MULTI-OUTLET EMITTER ASSEMBLY
	SINGLE-OUTLET EMITTER ASSEMBLY
	CITY DRIP LATERAL FLUSH END CAP ASSEMBLY
X"	CITY MAINLINE PIPE: (AS NOTED)
	SHRUB/ACCENT DRIP LATERAL PIPE: 3/4" SCH 40 PVC
	TREE DRIP LATERAL PIPE: 3/4" SCH 40 PVC
PS#	PIPE SLEEVES (PS)

No New Irrigation This Sheet

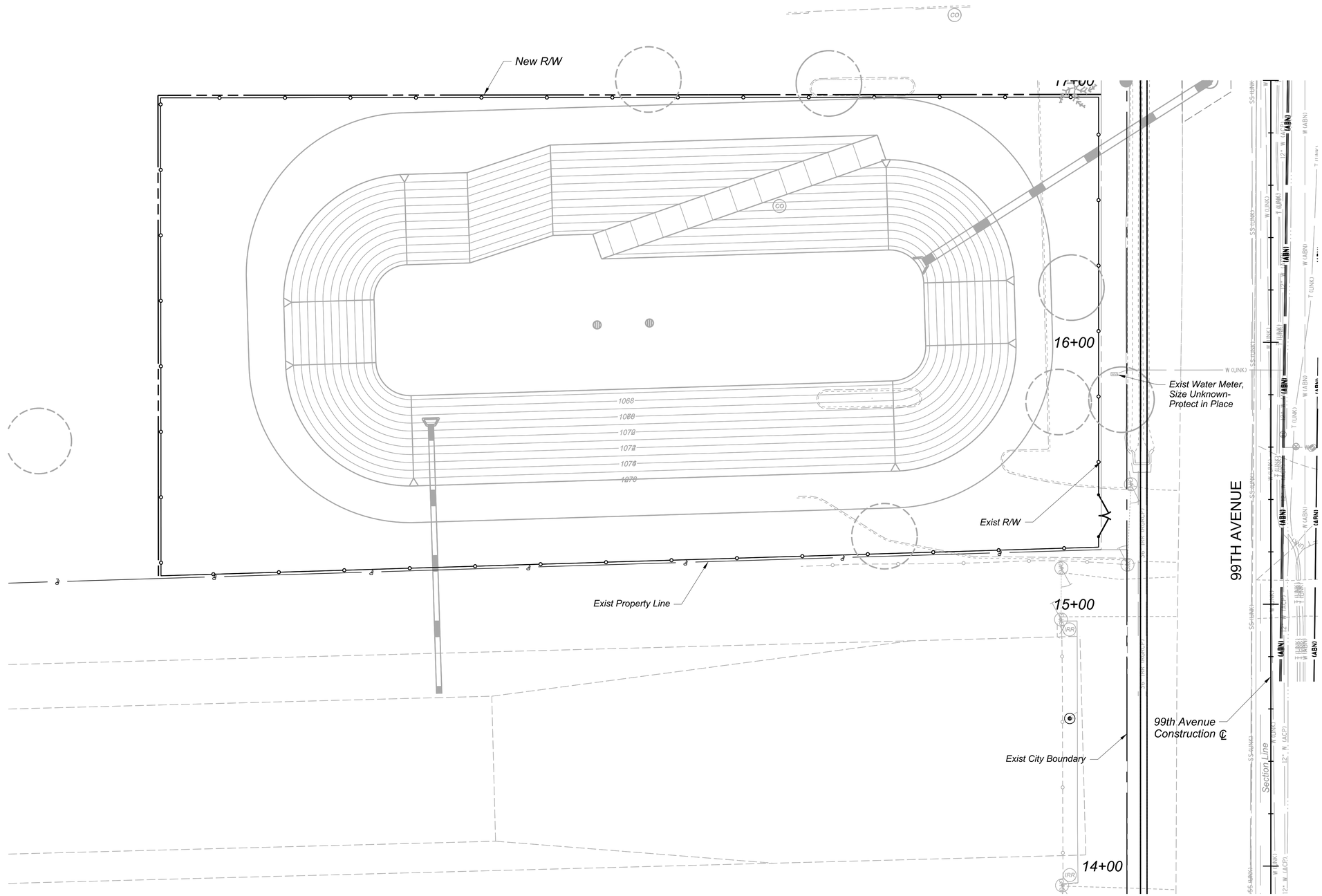

SCALE Hor: 1"=20'
Vert: NA

20 0 20 40
SCALE IN FEET

Contact Arizona 811 Two Working Days Before You Dig
Call 811 or Click Arizona811.com

NO.	REVISION	BY	DATE
3			
2			
1			

MARICOPA COUNTY

NORTHERN PARKWAY
103RD AVENUE TO 91ST AVENUE - PHASE 1
PROJECT NO. TT0372

Registered Landscape Architect
CERTIFICATE NO.
34191
J. SETH
PLACKO
Date Signed 05/06/26
ARIZONA U.S.A.

	BY	DATE
DESIGNED	DM/EN/AL	5/6/2026
DRAWN	J2CAD	5/6/2026
CHECKED	SP	5/6/2026

J2 Design

99TH AVENUE - IRRIGATION PLAN
STA 13+90 TO 16+00

SHEET IR07

TRACS NO.

c:\bmstyli-pw\splacko__j2\design\057307\6\TT0372_SC_Landscape_Irrigation_IR07.dgn
OpenRoads_Imperial 4:42:22 PM 5/6/2026 MCDOT_TYLIN_PRINT.tbl TYLI_GN_bwpdf.pltcfg

F.H.W.A. REGION	STATE	PROJECT NO.	SHEET NO.	TOTAL SHEETS	RECORD DRAWING
9	AZ	TT0372	217	224	

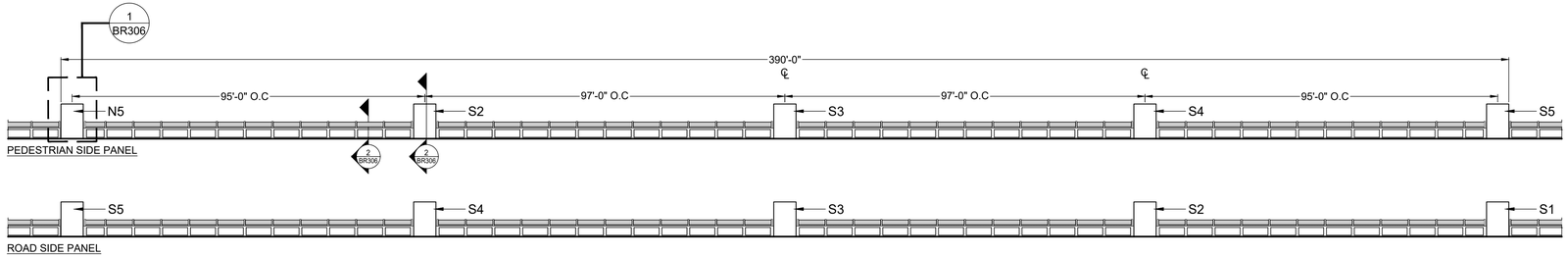

1 NORTH VEHICULAR BARRIER ELEVATIONS

SCALE: 1" = 20'-0"

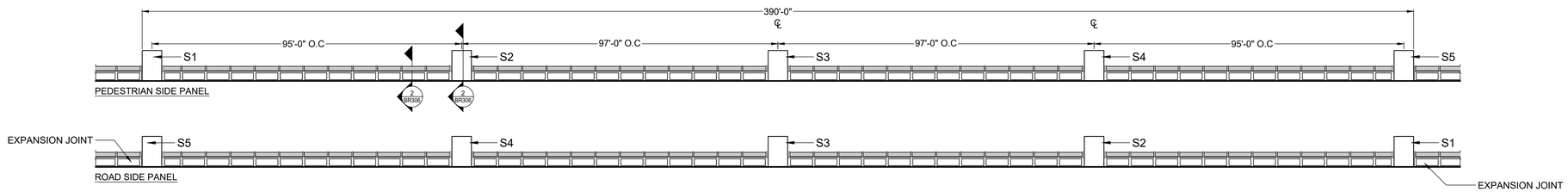

2 SOUTH VEHICULAR BARRIER ELEVATIONS

SCALE: 1" = 20'-0"

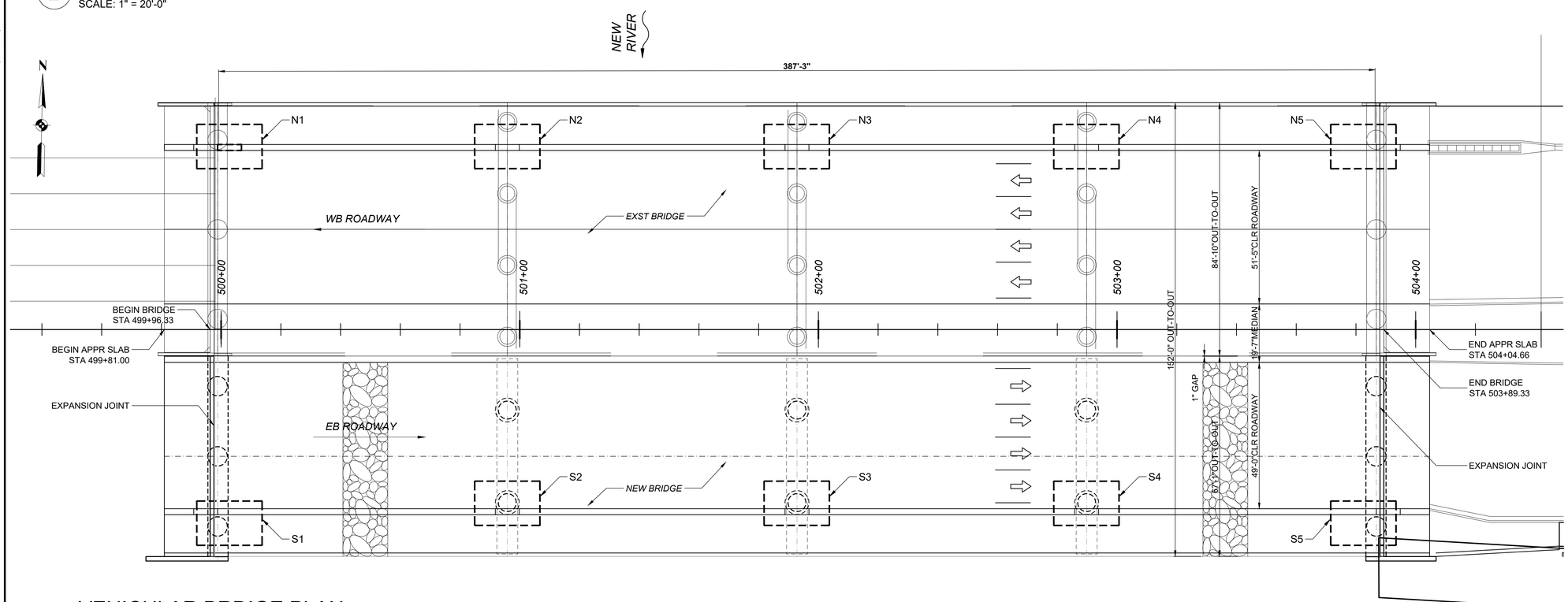

3 VEHICULAR BRDIGE PLAN

SCALE: 1" = 20'-0"

COLUMN LEGEND

DESIGNATION	COLUMN TYPE	DETAIL
N1	WAVE	DTL 1 / BR302
N2	PINE	DTL 2 / BR302
N3	WILLOW	DTL 3 / BR302
N4	IRONWOOD	DTL 4 / BR302
N5	WAVE	DTL 1 / BR302
S1	WAVE	DTL 1 / BR302
S2	ACACIA	DTL 1 / BR303
S3	MESQUITE	DTL 2 / BR303
S4	PALO VERDE	DTL 3 / BR303
S5	WAVE	DTL 1 / BR302

WELDING NOTES:

1. CONTRACTOR SHALL SUBMIT SHOP DRAWINGS AND SUBMITTALS OF ALL HARDWARE, STEEL MEMBERS, AND INFILL PANELS TO CITY OF PEORIA REPRESENTATIVE FOR REVIEW AND APPROVAL PRIOR TO FABRICATION.
2. ALL METAL MEMBERS AND WELDS SHALL BE GROUND SMOOTH/ROUNDED TO BE FREE OF ANY SHARP EDGES, CORNERS, AND BURRS.
3. ALL WELDS SHALL CONFORM TO AWS D1.1 LATEST EDITION. ALL FIELD WELDS SHALL BE TESTED BY NON-DESTRUCTIVE METHOD.

STEEL NOTES:

1. STRUCTURAL TUBING SHALL BE ASTM A500 GRADE B
2. STEEL BARS SHALL BE ASTM A 36

PAINTING NOTES:

1. ALL STEEL COMPONENTS SHALL HAVE SURFACE PREPARATION OF SSPC SP10. PRIME COAT SHALL BE ONE COAT OF REINFORCED INORGANIC ZINC PRIMER AS SPECIFICED AT 3-5 MILS DFT. TOP COAT WITH ONE COAT OF ALIPHATIC ACRYLIC URETHANE AS SPECIFICED AT 3-5 MILS DFT.
2. ALL STEEL MEMBERS INCLUDING POSTS, RAILS, ANGLE IRON FRAMING WELDED WIRE MESH, AND DECORATIVE PANELS TO RECEIVE A TOP COAT, REFER TO PLANS FOR COLOR

REINFORCING NOTES:

FOR STRUCTURE REINFORCING REQUIREMENTS REFER TO STRUCTURAL PLANS & DETAILS.

Contact Arizona 811 Two Working Days Before You Dig
ARIZONA811 BLUE STAKE, INC.
Call 811 or Click Arizona811.com

NO.	REVISION	BY	DATE
3			
2			
1			

MARICOPA COUNTY
DEPARTMENT OF TRANSPORTATION

NORTHERN PARKWAY
99TH AVENUE TO 87TH AVENUE
PROJECT NO. TT0372

95% PLANS

PRELIMINARY NOT FOR CONSTRUCTION

	BY	DATE
DESIGNED	AH	05/30/25
DRAWN	KZ	05/30/25
CHECKED	AH	05/30/25

J2 Design

VEHICULAR BRIDGE DETAILS

SHEET BR301

TRACS NO.

$PLTDRVS$ $PENTBLS$ $DATE$ $TIME$ $USER$ $NAME$ $FILE$

\\VR-FILE\Project Data\21410.001\L2Cad\Sheets\Bridge - New River - BR300.dwg

F.H.W.A. REGION	STATE	PROJECT NO.	SHEET NO.	TOTAL SHEETS	RECORD DRAWING
9	AZ	TT0372	218	224	

NOTES:

1. GRAPHICS SHOWN FOR REFERENCE ONLY. SEE SHT BR 304 & BR305 FOR COLUMN DETAILS.
2. SEE BR 308 FOR MATERIAL COLORS.
3. ALL INFORMATIVE TEXT, COLOR PRINT SHOULD BE REVIEWED AND APPROVED AT SHOP DRAWING STAGE.

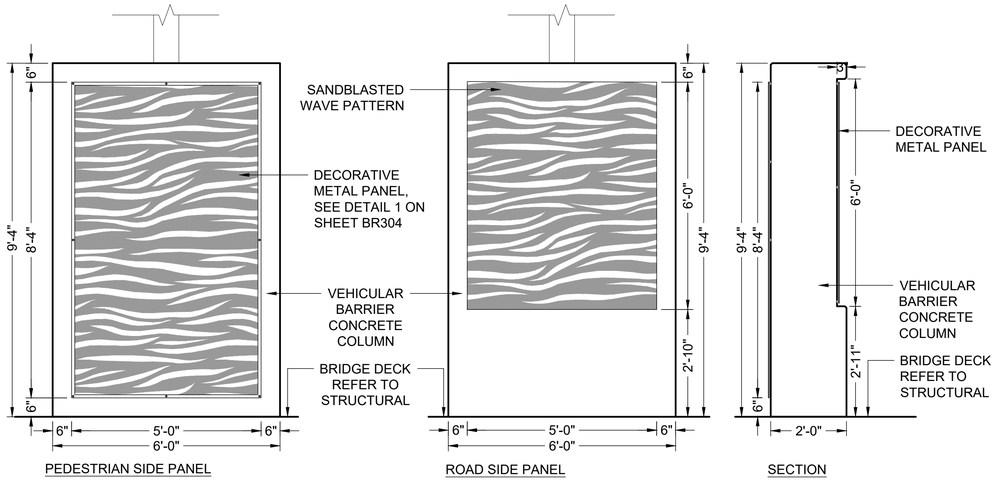

1 WAVE PATTERN COLUMN PANELS (N1, N5, S1 & S5)

SCALE: NTS

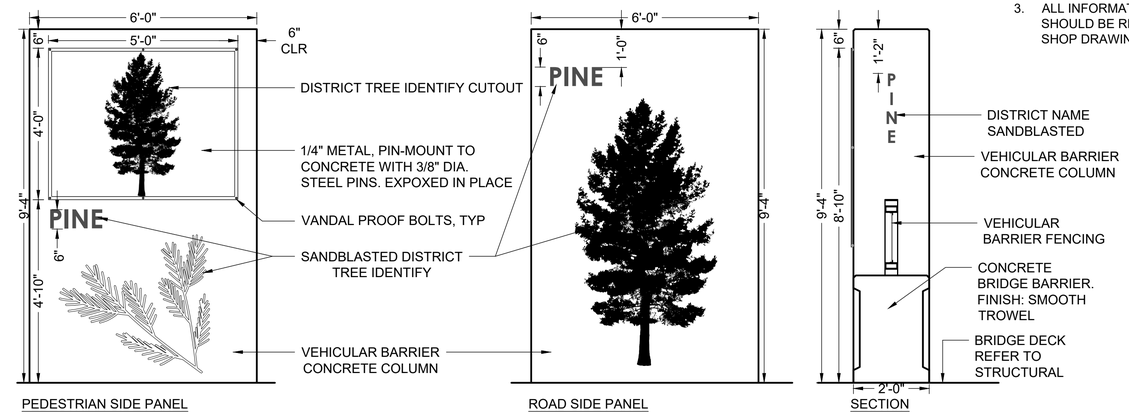

2 DISTRICT COLUMN PANEL - PINE (N2)

SCALE: NTS

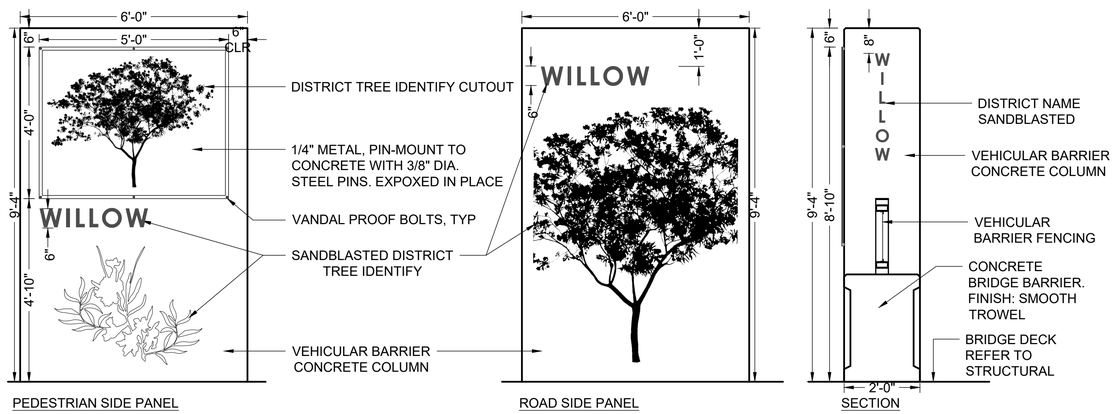

3 DISTRICT COLUMN PANEL - WILLOW (N3)

SCALE: NTS

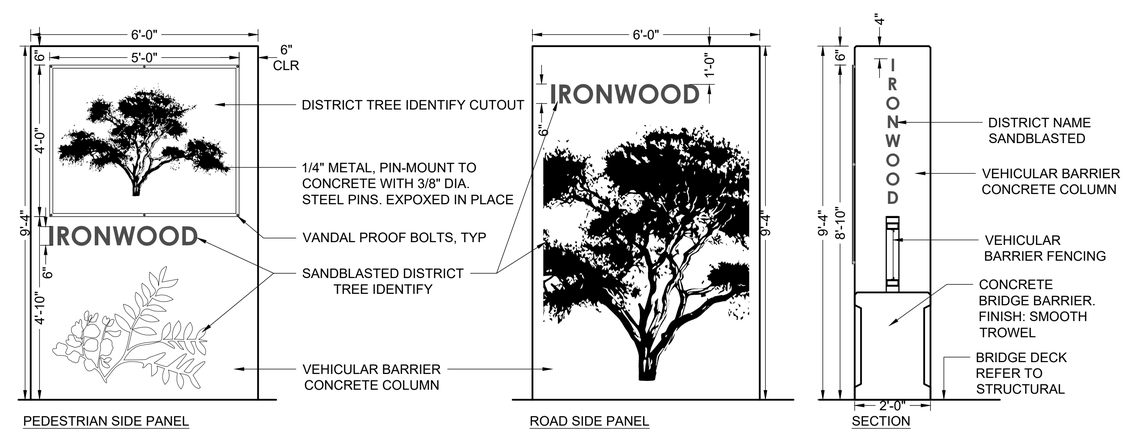

4 DISTRICT COLUMN PANEL - IRONWOOD (N4)

SCALE: NTS

Contact Arizona 811 Two Working Days Before You Dig
Call 811 or Click Arizona811.com

NO.	REVISION	BY	DATE
3			
2			
1			

MARICOPA COUNTY
DEPARTMENT OF TRANSPORTATION

NORTHERN PARKWAY
99TH AVENUE TO 87TH AVENUE
PROJECT NO. TT0372

95% PLANS

PRELIMINARY NOT FOR CONSTRUCTION

	BY	DATE
DESIGNED	AH	05/30/25
DRAWN	KZ	05/30/25
CHECKED	AH	05/30/25

J2 Design

VEHICULAR BRIDGE DETAILS

SHEET BR302

TRACS NO. _____

$PLTDRVS$ $PENTBLS$ $DATE$ $TIME$ $USER$ $NAME$ $FILE$

\\VR-FILE\Project\Data\211470.001\J2cad\Sheets\Bridge - New River - BR300.dwg

F.H.W.A. REGION	STATE	PROJECT NO.	SHEET NO.	TOTAL SHEETS	RECORD DRAWING
9	AZ	TT0372	219	224	

NOTES:

1. GRAPHICS SHOWN FOR REFERENCE ONLY. SEE SHT BR 304 & BR305 FOR COLUMN DETAILS.
2. SEE BR 308 FOR MATERIAL COLORS.
3. ALL INFORMATIVE TEXT, COLOR PRINT SHOULD BE REVIEWED AND APPROVED AT SHOP DRAWING STAGE.

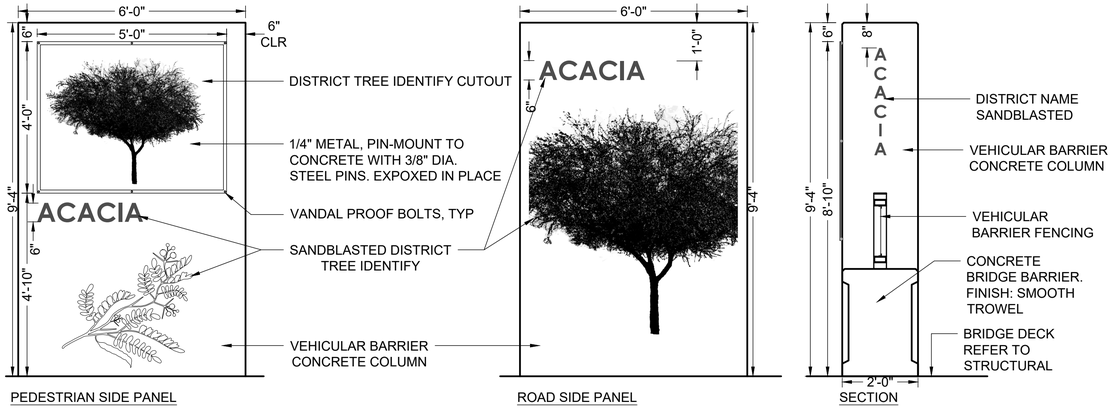

1 DISTRICT COLUMN PANEL - ACACIA (S2)

SCALE: 1/2" = 1'-0"

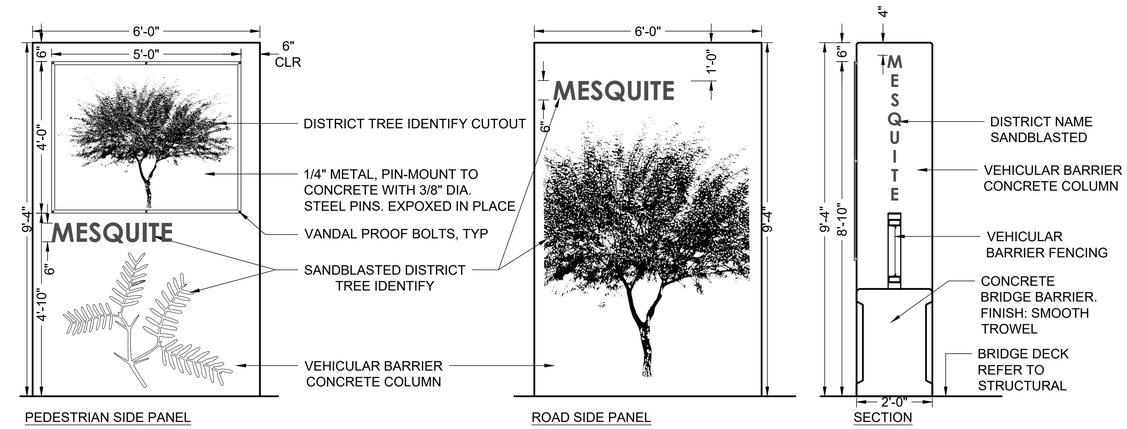

2 DISTRICT COLUMN PANEL - MESQUITE (S3)

SCALE: 1/2" = 1'-0"

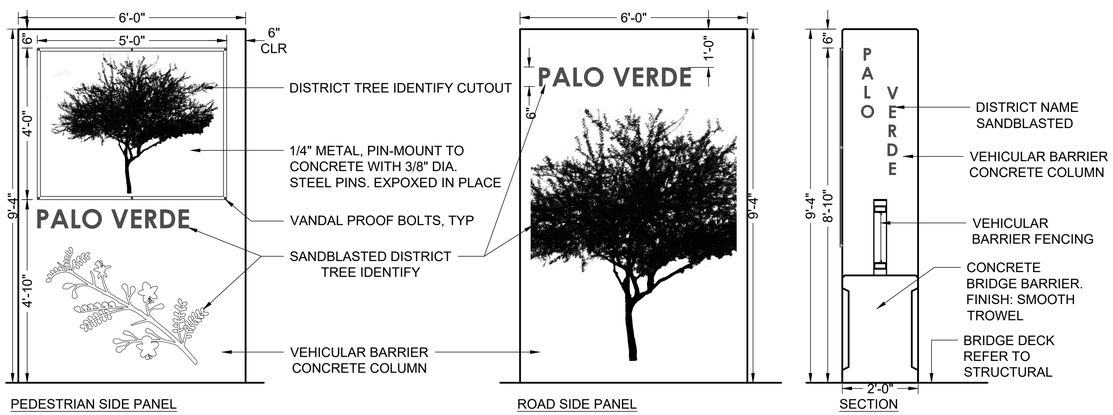

3 DISTRICT COLUMN PANEL - PALO VERDE (S4)

SCALE: 1/2" = 1'-0"

Contact Arizona 811 Two Working Days Before You Dig
Call 811 or Click Arizona811.com

NO.	REVISION	BY	DATE
3			
2			
1			

MARICOPA COUNTY
DEPARTMENT OF TRANSPORTATION

NORTHERN PARKWAY
99TH AVENUE TO 87TH AVENUE
PROJECT NO. TT0372

95% PLANS

PRELIMINARY NOT FOR CONSTRUCTION

	BY	DATE
DESIGNED	AH	05/30/25
DRAWN	KZ	05/30/25
CHECKED	AH	05/30/25

J2 Design

VEHICULAR BRIDGE DETAILS

SHEET BR303

TRACS NO. _____

$PLTDRVS$ $PENTBLS$ $DATE$ $TIME$ $USER$ $NAME$ $FILE$

\\VR-FILE\Project Data\211470.001\J2cad\Sheets\Bridge - New River - BR300.dwg

F.H.W.A. REGION	STATE	PROJECT NO.	SHEET NO.	TOTAL SHEETS	RECORD DRAWING
9	AZ	TT0372	220	224	

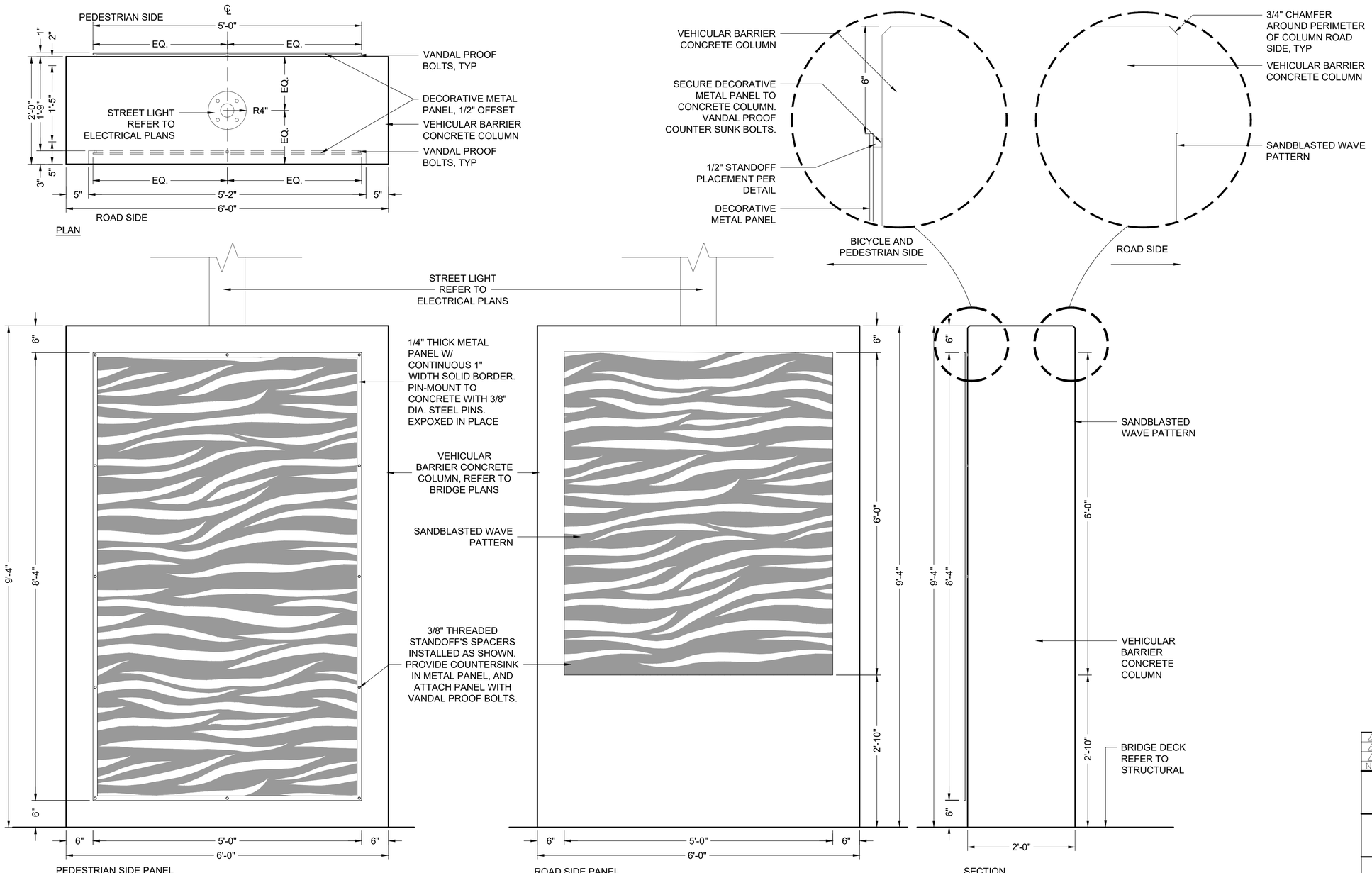

1 END COLUMN PANEL DETAIL

SCALE: 1" = 1'-0"

WELDING NOTES:

1. CONTRACTOR SHALL SUBMIT SHOP DRAWINGS AND SUBMITTALS OF ALL HARDWARE, STEEL MEMBERS, AND INFILL PANELS TO CITY OF PEORIA REPRESENTATIVE FOR REVIEW AND APPROVAL PRIOR TO FABRICATION.
2. ALL METAL MEMBERS AND WELDS SHALL BE GROUND SMOOTH/ROUNDED TO BE FREE OF ANY SHARP EDGES, CORNERS, AND BURRS.
3. ALL WELDS SHALL CONFORM TO AWS D1.1 LATEST EDITION. ALL FIELD WELDS SHALL BE TESTED BY NON-DESTRUCTIVE METHOD.

STEEL NOTES:

1. STRUCTURAL TUBING SHALL BE ASTM A500 GRADE B
2. STEEL BARS SHALL BE ASTM A 36

PAINTING NOTES:

1. ALL STEEL COMPONENTS SHALL HAVE SURFACE PREPARATION OF SSPC SP10. PRIME COAT SHALL BE ONE COAT OF REINFORCED INORGANIC ZINC PRIMER AS SPECIFICED AT 3-5 MILS DFT. TOP COAT WITH ONE COAT OF ALIPHATIC ACRYLIC URETHANE AS SPECIFICED AT 3-5 MILS DFT.
2. ALL STEEL MEMBERS INCLUDING POSTS, RAILS, ANGLE IRON FRAMING WELDED WIRE MESH, AND DECORATIVE PANELS TO RECEIVE A TOP COAT, REFER TO SHEET BR308 FOR SELECTED COLORS.

REINFORCING NOTES:

FOR STRUCTURE REINFORCING REQUIREMENTS REFER TO STRUCTURAL PLANS & DETAILS.

Contact Arizona 811 Two Working Days Before You Dig
Call 811 or Click Arizona811.com

NO.	REVISION	BY	DATE
3			
2			
1			

MARICOPA COUNTY
DEPARTMENT OF TRANSPORTATION

NORTHERN PARKWAY
99TH AVENUE TO 87TH AVENUE
PROJECT NO. TT0372

95% PLANS

PRELIMINARY NOT FOR CONSTRUCTION

	BY	DATE
DESIGNED	AH	05/30/25
DRAWN	KZ	05/30/25
CHECKED	AH	05/30/25

J2 Design

VEHICULAR BRIDGE DETAILS

SHEET BR304

TRACS NO. _____

$PLTDRVS$ $PENTBLS$ $DATE$ $TIME$ $USER$ $NAME$ $FILE$

\\VR-FILE\Project\Data\211470.001\J2cad\Sheets\Bridge - New River - BR300.dwg

F.H.W.A. REGION	STATE	PROJECT NO.	SHEET NO.	TOTAL SHEETS	RECORD DRAWING
9	AZ	TT0372	221	224	

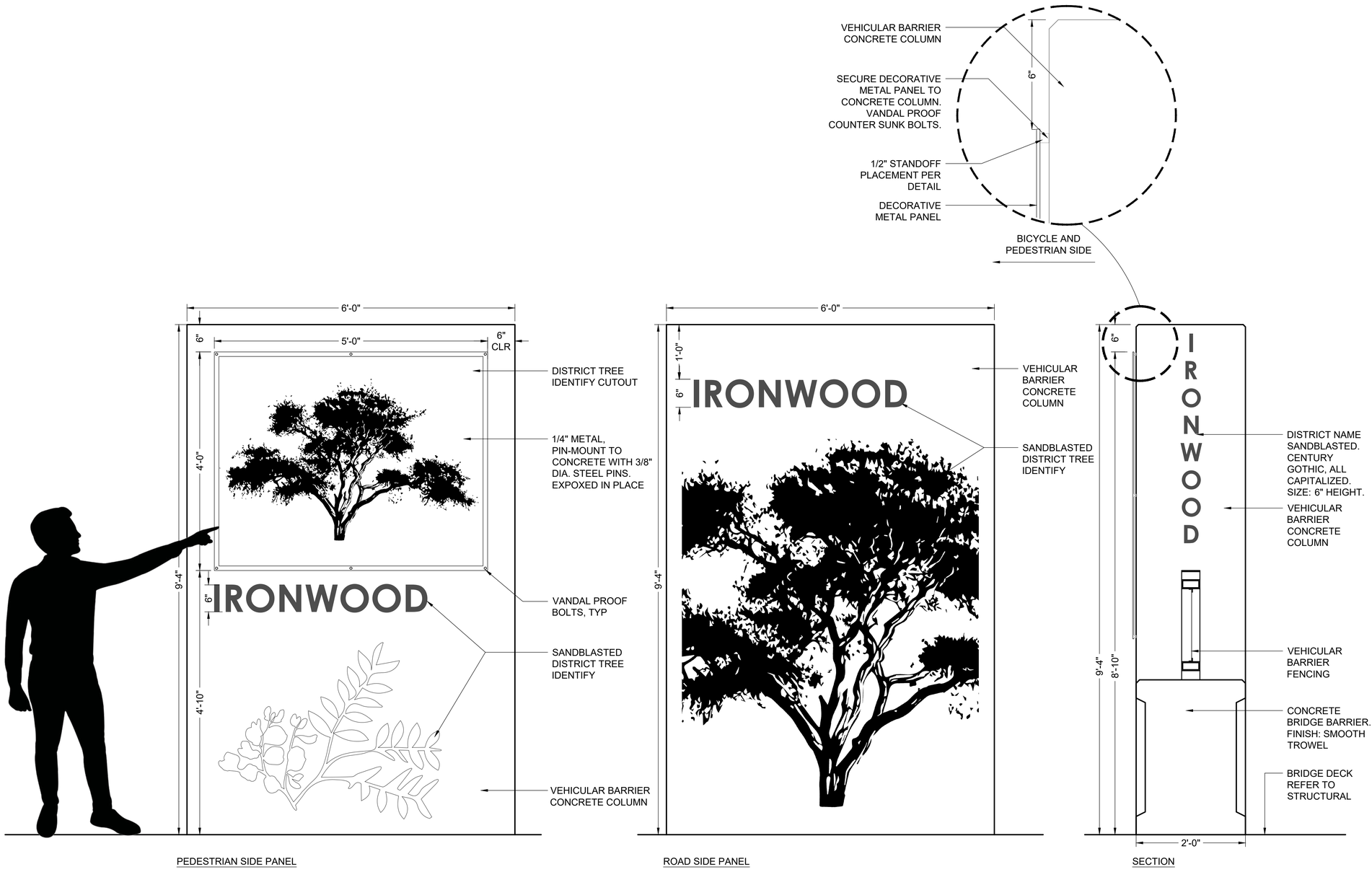

1 DISTRICT COLUMN PANEL DETAIL

SCALE: 1" = 1'-0"

WELDING NOTES:

1. CONTRACTOR SHALL SUBMIT SHOP DRAWINGS AND SUBMITTALS OF ALL HARDWARE, STEEL MEMBERS, AND INFILL PANELS TO CITY OF PEORIA REPRESENTATIVE FOR REVIEW AND APPROVAL PRIOR TO FABRICATION.
2. ALL METAL MEMBERS AND WELDS SHALL BE GROUND SMOOTH/ROUNDED TO BE FREE OF ANY SHARP EDGES, CORNERS, AND BURRS.
3. ALL WELDS SHALL CONFORM TO AWS D1.1 LATEST EDITION. ALL FIELD WELDS SHALL BE TESTED BY NON-DESTRUCTIVE METHOD.

STEEL NOTES:

1. STRUCTURAL TUBING SHALL BE ASTM A500 GRADE B
2. STEEL BARS SHALL BE ASTM A 36

PAINTING NOTES:

1. ALL STEEL COMPONENTS SHALL HAVE SURFACE PREPARATION OF SSPC SP10. PRIME COAT SHALL BE ONE COAT OF REINFORCED INORGANIC ZINC PRIMER AS SPECIFICED AT 3-5 MILS DFT. TOP COAT WITH ONE COAT OF ALIPHATIC ACRYLIC URETHANE AS SPECIFICED AT 3-5 MILS DFT.
2. ALL STEEL MEMBERS INCLUDING POSTS, RAILS, ANGLE IRON FRAMING WELDED WIRE MESH, AND DECORATIVE PANELS TO RECEIVE A TOP COAT, REFER TO SHEET BR308 FOR SELECTED COLORS.

REINFORCING NOTES:

FOR STRUCTURE REINFORCING REQUIREMENTS REFER TO STRUCTURAL PLANS & DETAILS.

Contact Arizona 811 Two Working Days Before You Dig
ARIZONA811 BLUE STAKE, INC.
Call 811 or Click Arizona811.com

NO.	REVISION	BY	DATE
3			
2			
1			

MARICOPA COUNTY
DEPARTMENT OF TRANSPORTATION

NORTHERN PARKWAY
99TH AVENUE TO 87TH AVENUE
PROJECT NO. TT0372

95% PLANS

PRELIMINARY NOT FOR CONSTRUCTION

	BY	DATE
DESIGNED	AH	05/30/25
DRAWN	KZ	05/30/25
CHECKED	AH	05/30/25

J2 Design

VEHICULAR BRIDGE DETAILS

SHEET BR305

TRACS NO.

$PLTDRVS$ $PENTBLS$ $DATE$ $TIME$ $USER$ $NAME$ $FILE$

\\VR-FILE\Projectdata\214710.001\L2Cad\Sheets\Bridge - New River - BR300.dwg

F.H.W.A. REGION	STATE	PROJECT NO.	SHEET NO.	TOTAL SHEETS	RECORD DRAWING
9	AZ	TT0372	222	224	

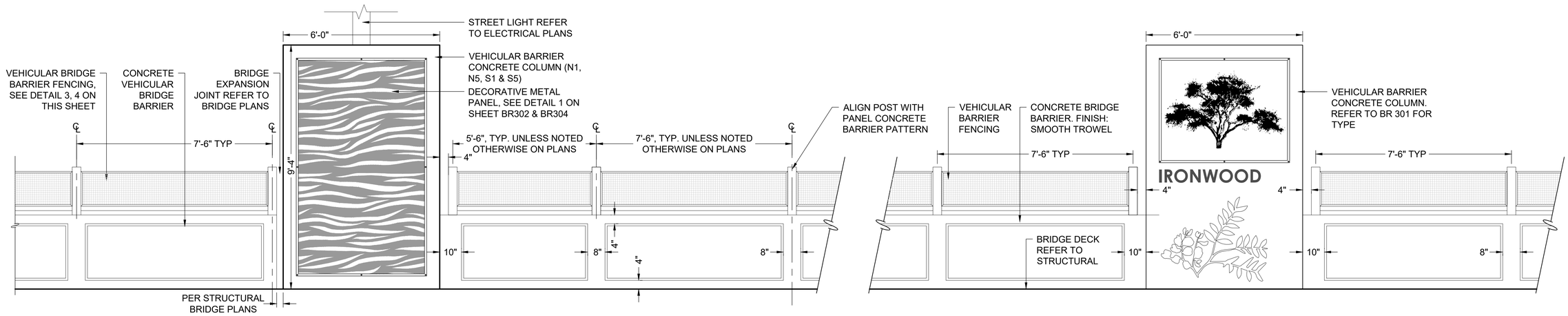

1 VEHICULAR BARRIER ELEVATION ENLARGEMENT

SCALE: 1/2" = 1'-0"

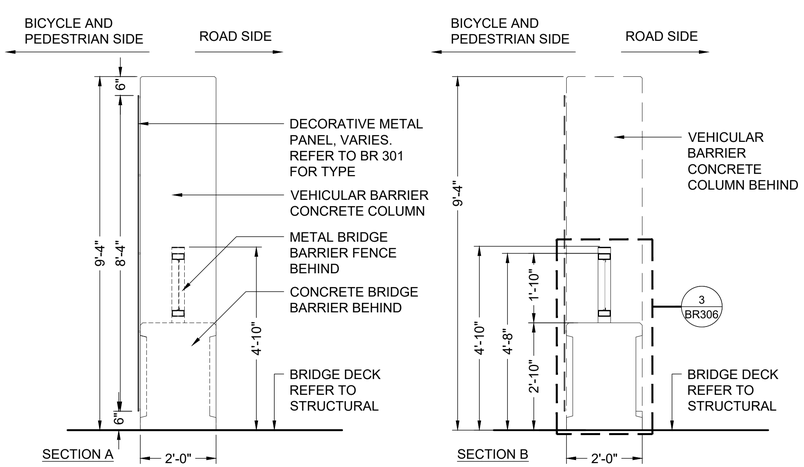

2 VEHICULAR BARRIER END ELEVATION ENLARGEMENT

SCALE: 1/2" = 1'-0"

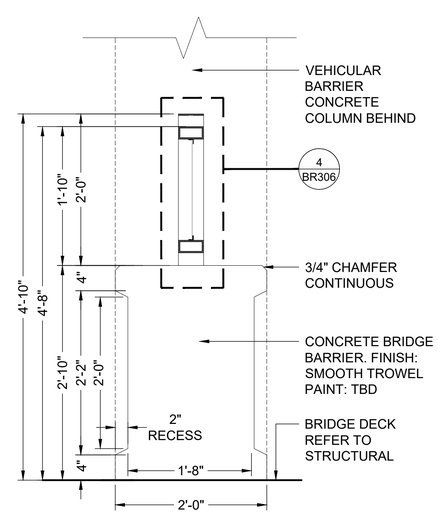

3 VEHICULAR BARRIER FENCING FENCE SIDE ELEVATION

SCALE: 1" = 1'-0"

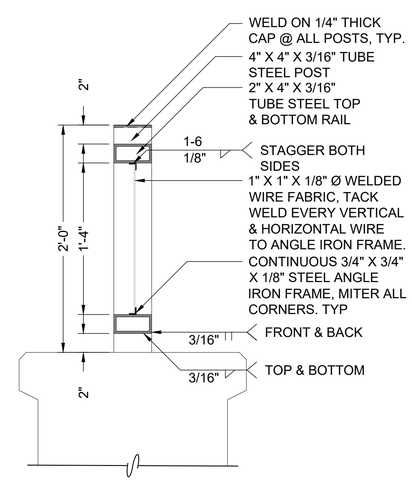

4 VEHICULAR BARRIER FENCING CROSS-SECTION

SCALE: 1 1/2" = 1'-0"

WELDING NOTES:

1. CONTRACTOR SHALL SUBMIT SHOP DRAWINGS AND SUBMITTALS OF ALL HARDWARE, STEEL MEMBERS, AND INFILL PANELS TO CITY OF PEORIA REPRESENTATIVE FOR REVIEW AND APPROVAL PRIOR TO FABRICATION.
2. ALL METAL MEMBERS AND WELDS SHALL BE GROUND SMOOTH/ROUNDED TO BE FREE OF ANY SHARP EDGES, CORNERS, AND BURRS.
3. ALL WELDS SHALL CONFORM TO AWS D1.1 LATEST EDITION. ALL FIELD WELDS SHALL BE TESTED BY NON-DESTRUCTIVE METHOD.

STEEL NOTES:

1. STRUCTURAL TUBING SHALL BE ASTM A500 GRADE B
2. STEEL BARS SHALL BE ASTM A 36

PAINTING NOTES:

1. ALL STEEL COMPONENTS SHALL HAVE SURFACE PREPARATION OF SSPC SP10. PRIME COAT SHALL BE ONE COAT OF REINFORCED INORGANIC ZINC PRIMER AS SPECIFICED AT 3-5 MILS DFT. TOP COAT WITH ONE COAT OF ALIPHATIC ACRYLIC URETHANE AS SPECIFICED AT 3-5 MILS DFT.
2. ALL STEEL MEMBERS INCLUDING POSTS, RAILS, ANGLE IRON FRAMING WELDED WIRE MESH, AND DECORATIVE PANELS TO RECEIVE A TOP COAT, REFER TO SHEET BR308 FOR SELECTED COLORS.

REINFORCING NOTES:

FOR STRUCTURE REINFORCING REQUIREMENTS REFER TO STRUCTURAL PLANS & DETAILS.

Contact Arizona 811 Two Working Days Before You Dig
Call 811 or Click Arizona811.com

NO.	REVISION	BY	DATE
3			
2			
1			

MARICOPA COUNTY
DEPARTMENT OF TRANSPORTATION

NORTHERN PARKWAY
99TH AVENUE TO 87TH AVENUE
PROJECT NO. TT0372

95% PLANS

PRELIMINARY NOT FOR CONSTRUCTION

	BY	DATE
DESIGNED	AH	05/30/25
DRAWN	KZ	05/30/25
CHECKED	AH	05/30/25

J2 Design

VEHICULAR BRIDGE DETAILS

SHEET BR306

TRACS NO.

$PLTDRVS$ $PENTBLS$ $DATE$ $TIME$ $USER$ $NAME$ $FILE$

\\VR-FILE1\Project\Data\21410.001\L2Cad\Sheets\Bridge - New River - BR300.dwg

F.H.W.A. REGION	STATE	PROJECT NO.	SHEET NO.	TOTAL SHEETS	RECORD DRAWING
9	AZ	TT0372	223	224	

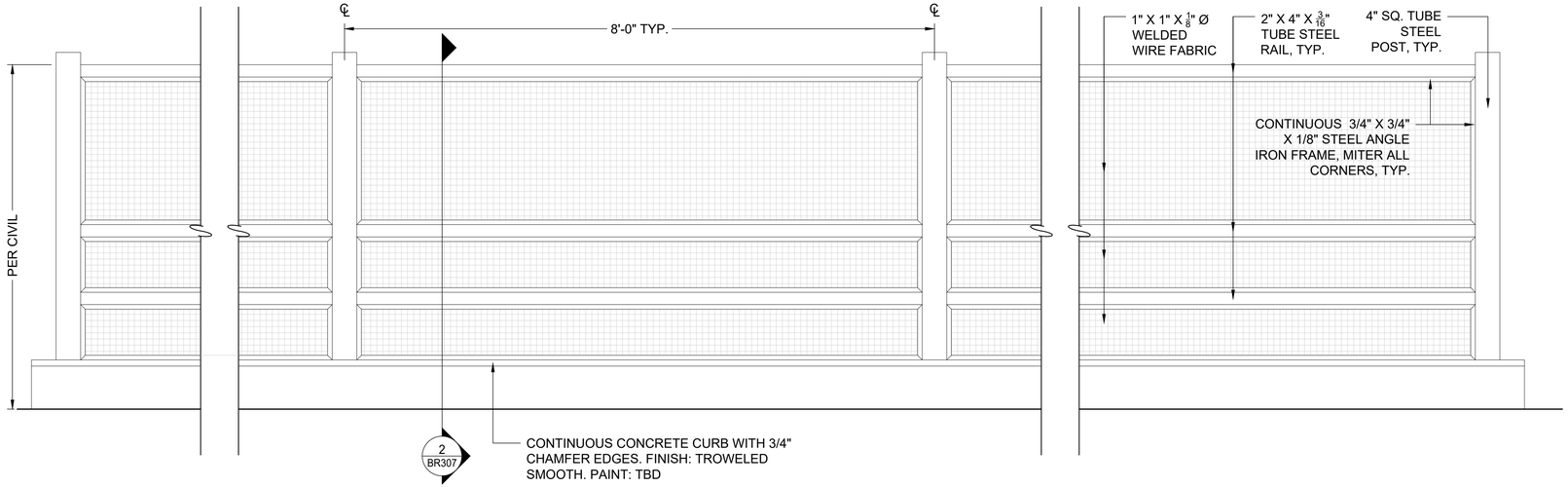

1 PEDESTRIAN BARRIER FENCING ELEVATION

SCALE: 1" = 1'-0"

WELDING NOTES:

1. CONTRACTOR SHALL SUBMIT SHOP DRAWINGS AND SUBMITTALS OF ALL HARDWARE, STEEL MEMBERS, AND INFILL PANELS TO CITY OF PEORIA REPRESENTATIVE FOR REVIEW AND APPROVAL PRIOR TO FABRICATION.
2. ALL METAL MEMBERS AND WELDS SHALL BE GROUND SMOOTH/ROUNDED TO BE FREE OF ANY SHARP EDGES, CORNERS, AND BURRS.
3. ALL WELDS SHALL CONFORM TO AWS D1.1 LATEST EDITION. ALL FIELD WELDS SHALL BE TESTED BY NON-DESTRUCTIVE METHOD.

STEEL NOTES:

1. STRUCTURAL TUBING SHALL BE ASTM A500 GRADE B
2. STEEL BARS SHALL BE ASTM A 36

PAINTING NOTES:

1. ALL STEEL COMPONENTS SHALL HAVE SURFACE PREPARATION OF SSPC SP10. PRIME COAT SHALL BE ONE COAT OF REINFORCED INORGANIC ZINC PRIMER AS SPECIFICED AT 3-5 MILS DFT. TOP COAT WITH ONE COAT OF ALIPHATIC ACRYLIC URETHANE AS SPECIFICED AT 3-5 MILS DFT.
2. ALL STEEL MEMBERS INCLUDING POSTS, RAILS, ANGLE IRON FRAMING WELDED WIRE MESH, AND DECORATIVE PANELS TO RECEIVE A TOP COAT, REFER TO SHEET BR308 FOR SELECTED COLORS.

REINFORCING NOTES:

FOR STRUCTURE REINFORCING REQUIREMENTS REFER TO STRUCTURAL PLANS & DETAILS.

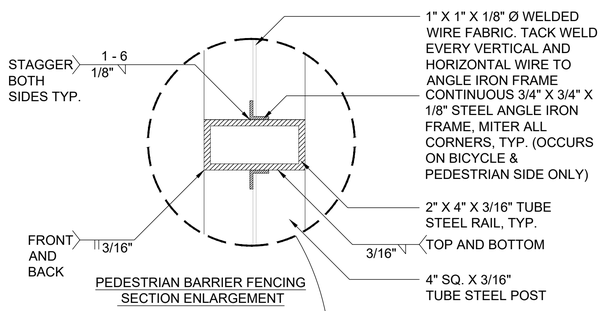

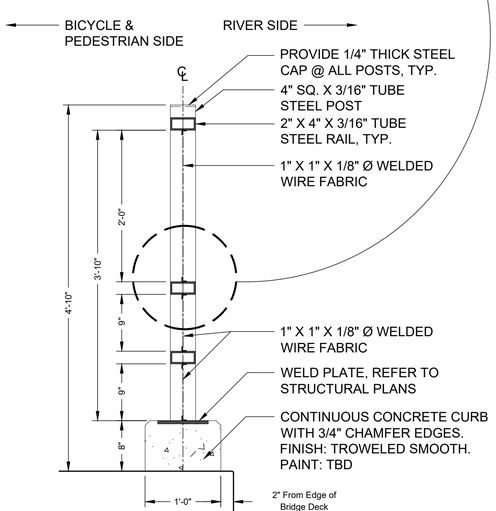

2 PEDESTRIAN BARRIER FENCING SECTION

SCALE: 1" = 1'-0"

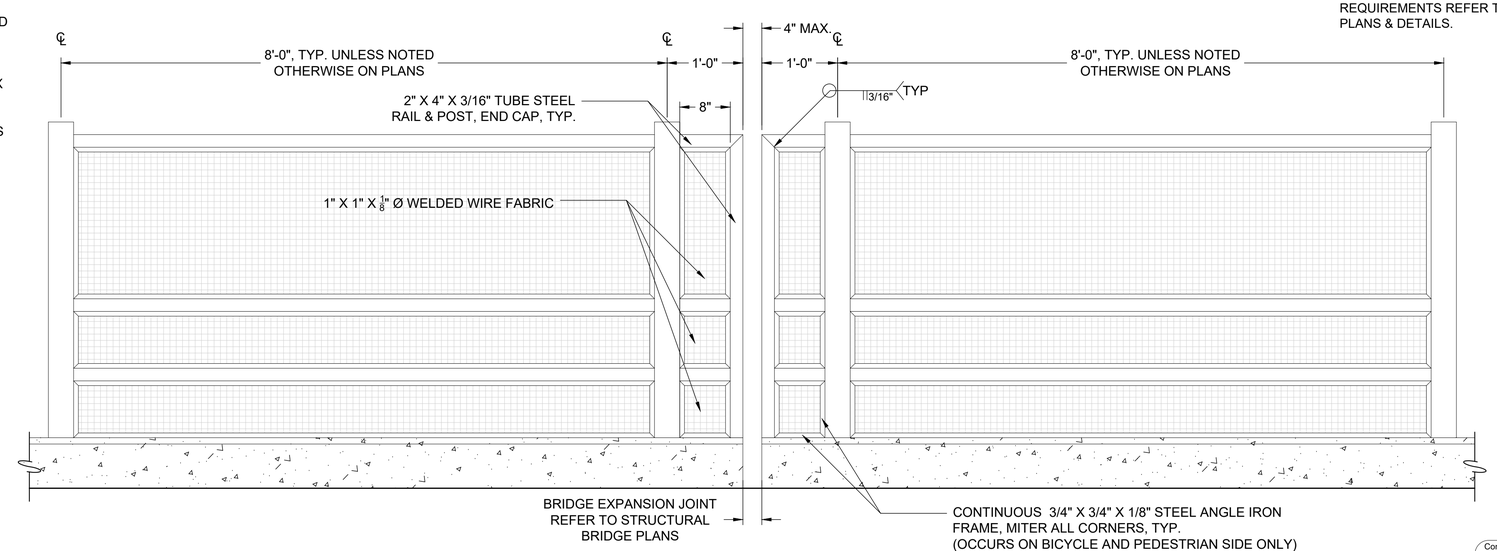

3 PEDESTRIAN BARRIER FENCING @ BRIDGE EXPANSION JOINT

SCALE: 1" = 1'-0"

Contact Arizona 811 Two Working Days Before You Dig
Call 811 or Click Arizona811.com

NO.	REVISION	BY	DATE
3			
2			
1			

MARICOPA COUNTY
DEPARTMENT OF TRANSPORTATION

NORTHERN PARKWAY
99TH AVENUE TO 87TH AVENUE
PROJECT NO. TT0372

95% PLANS

PRELIMINARY NOT FOR CONSTRUCTION

	BY	DATE
DESIGNED	AH	05/30/25
DRAWN	KZ	05/30/25
CHECKED	AH	05/30/25

J2 Design

VEHICULAR BRIDGE DETAILS

SHEET BR307

TRACS NO. _____

$PLTDRVS$ $PENTBLS$ $DATE$ $TIME$ $USER$ $NAME$ $FILES

\\VR-FILE1\Project\Data\21410.001\J2cad\Sheets\Bridge - New River - BR300.dwg

F.H.W.A. REGION	STATE	PROJECT NO.	SHEET NO.	TOTAL SHEETS	RECORD DRAWING
9	AZ	TT0372	224	224	

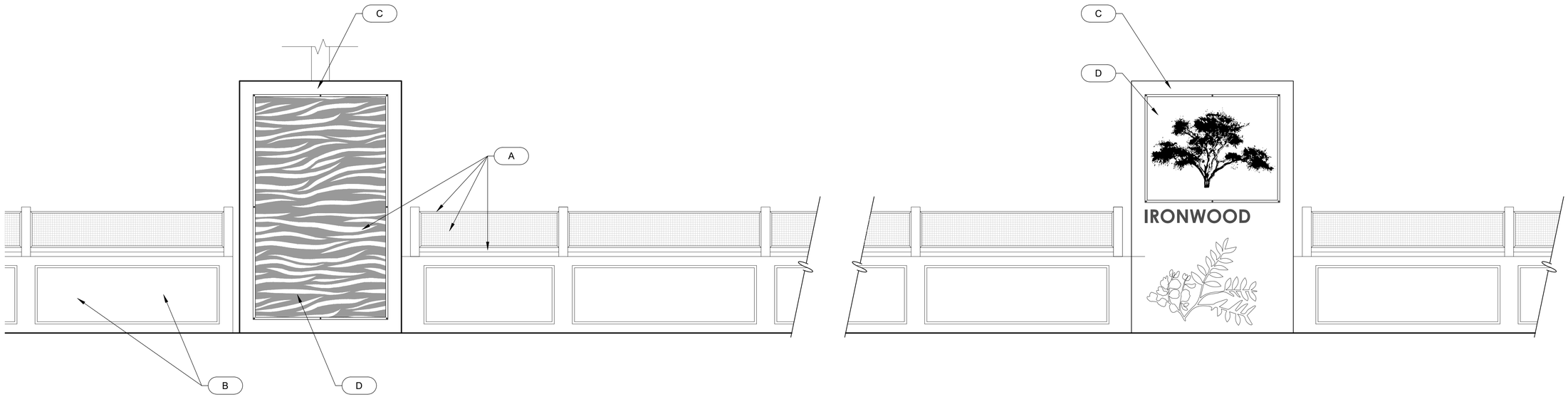

1 BRIDGE AESTHETICS PAINT COLORS

SCALE: 1/2" = 1'-0"

A

DEC761 Cochise

B

DEA164 Autumn Bark

C

DET639 Maple Brown Sugar

D

DE6042 Bear in Mind

Contact Arizona 811 Two Working Days Before You Dig

Call 811 or Click Arizona811.com

NO.	REVISION	BY	DATE
3			
2			
1			

MARICOPA COUNTY
DEPARTMENT OF TRANSPORTATION

NORTHERN PARKWAY
99TH AVENUE TO 87TH AVENUE
PROJECT NO. TT0372

95% PLANS

PRELIMINARY NOT FOR CONSTRUCTION

	BY	DATE
DESIGNED	AH	05/30/25
DRAWN	KZ	05/30/25
CHECKED	AH	05/30/25

J2 Design

VEHICULAR BRIDGE DETAILS

SHEET BR308

TRACS NO. _____

$PLTDRV$$ $PENTBL$$ $DATE$ $TIME$ $USER$ $NAME$ $FILE$

\\VR-FILE1\ProjectData\21410.001\L2CadSheets\Bridge - New River - BR300.dwg

F.H.W.A. REGION	STATE	PROJECT NO.	SHEET NO.	TOTAL SHEETS	RECORD DRAWING
9	AZ	TT0372	1	14	

MARICOPA COUNTY

EARTHWORK AND CROSS SECTION SHEETS FOR NORTHERN PARKWAY, 103RD AVENUE TO 91ST AVENUE - PHASE 1

PROJECT NO. TT0372

INDEX

1..... EARTHWORK COVER SHEET

2..... MASS DIAGRAM

3-14.... CROSS SECTIONS

PROJECT NO. TT0372

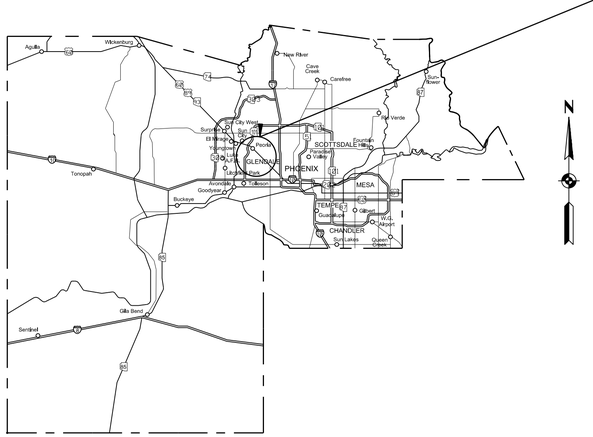

N

MARICOPA COUNTY

Not to Scale

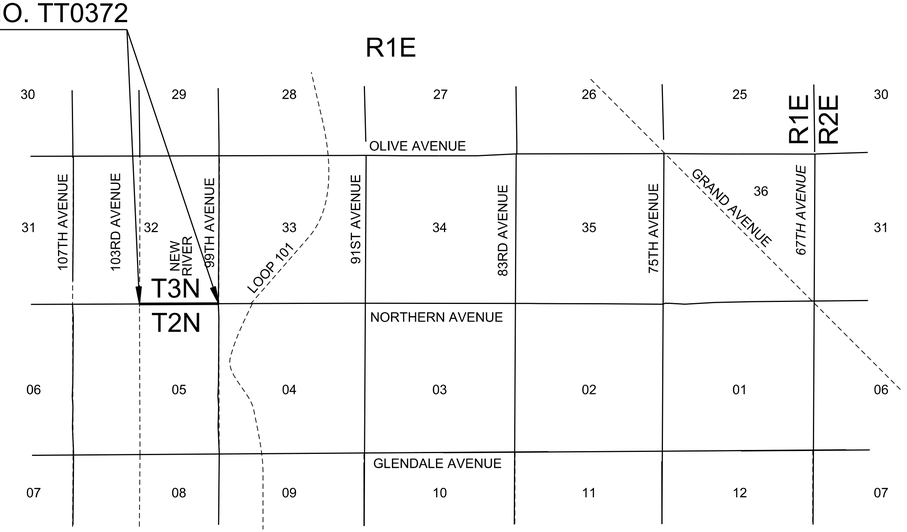

VICINITY MAP

Not to Scale

IN COOPERATION WITH:
ARIZONA DEPARTMENT OF TRANSPORTATION
CITY OF GLENDALE
CITY OF PEORIA
CITY OF EL MIRAGE

MARICOPA COUNTY DEPARTMENT OF TRANSPORTATION

RECOMMENDED FOR CONSTRUCTION:

MARCELLUS LISOTTA, P.E.
PROJECT MANAGER — DATE

ISSUED FOR CONSTRUCTION:

JESSE GUTIERREZ, P.E.
COUNTY ENGINEER/
DIRECTOR OF TRANSPORTATION — DATE

COUNTY BOARD OF SUPERVISORS

KATE BROPHY MCGEE - CHAIR

DISTRICT 1	MARK STEWART
DISTRICT 2	THOMAS GALVIN
DISTRICT 3	KATE BROPHY MCGEE
DISTRICT 4	DEBBIE LESKO
DISTRICT 5	STEVE GALLARDO

BRENAN POE
Date Signed
ARIZONA, U.S.A.

TRACS NO.

pw://tyli-pw.bentley.com:tyli-pw-01/Documents/Projects/221991.00_TT0372/600_CADD/05_Official/Dgn_PHASE 1/Sheets/TT0372_Cross Section Sheet.dgn 5:43:58 PM 3/19/2026 $PENTBLS$ $PLTDRVS$

F.H.W.A. REGION	STATE	PROJECT NO.	SHEET NO.	TOTAL SHEETS	RECORD DRAWING
9	AZ	TT0372	2	14	

MASS HAUL DIAGRAM

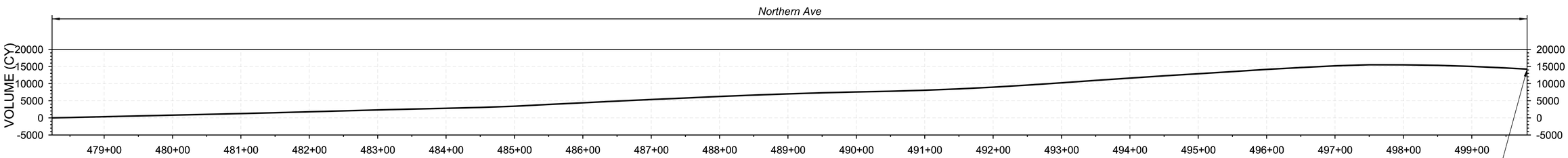

MASS HAUL DIAGRAM

14,249 CY Net Export
(Shrinkage Factors,
Pipe Excavation/Structural
Excavation not included)

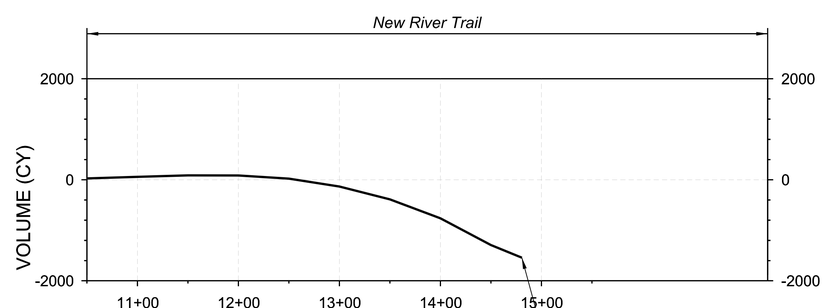

MASS HAUL DIAGRAM

1,543 CY Net Borrow
(Shrinkage Factors,
Pipe Excavation/Structural
Excavation not included)

Mass Diagram Calculation Assumptions:
1. Shrink factor (not applied to diagram): 5%

2. Ground Compaction of 0.10' feet

TRACS NO.

12:17:04 PM 8/8/2026

c:\bmsltylin_amer\d0573032\TT0372_Cross Section Mass Haul.dgn

F.H.W.A. REGION	STATE	PROJECT NO.	SHEET NO.	TOTAL SHEETS	RECORD DRAWING
9	AZ	TT0372	3	14	

SCALE: Hor: 1"=20'
Vert: 1"=1'

20 0 20 40
SCALE IN FEET

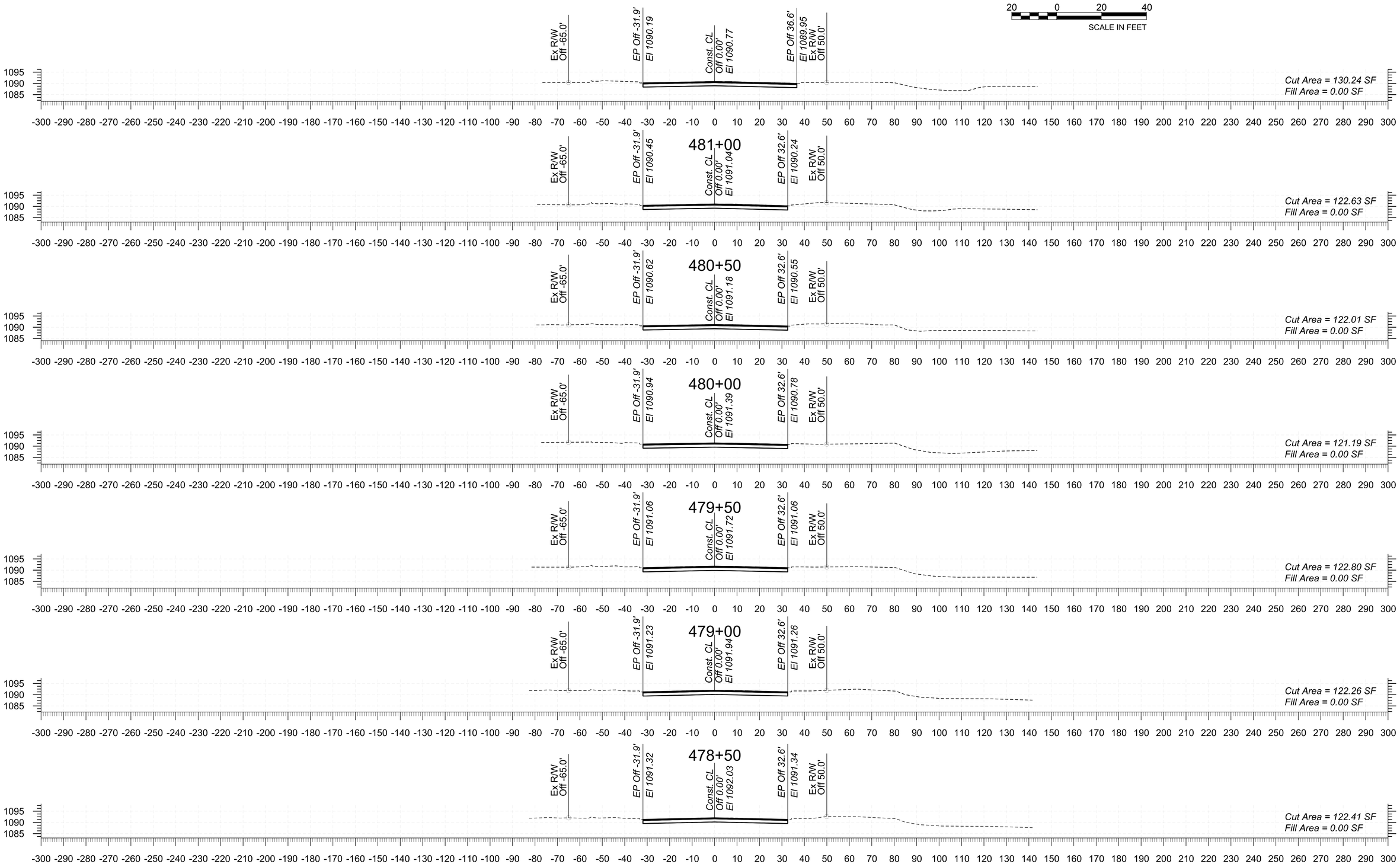

STA 478+24.00 TO STA 481+00.00

478+24

Northern Pkwy Segment 2A TT0372

TRACS NO._____

pw://tyli-pw.bentley.com:tyli-pw-01/Documents/Projects/3010.0013176.005_TT0639/600_DSGN/40_Sandbox/CB/NORTHERN MODEL/PHASE 1/TT0372_XSEC_Northern Pkwy_Phase 1.dgn 5:30:16 PM 5/4/2026

F.H.W.A. REGION	STATE	PROJECT NO.	SHEET NO.	TOTAL SHEETS	RECORD DRAWING
9	AZ	TT0372	4	14	

SCALE: Hor: 1"=20'
Vert: 1"=1'

20 0 20 40
SCALE IN FEET

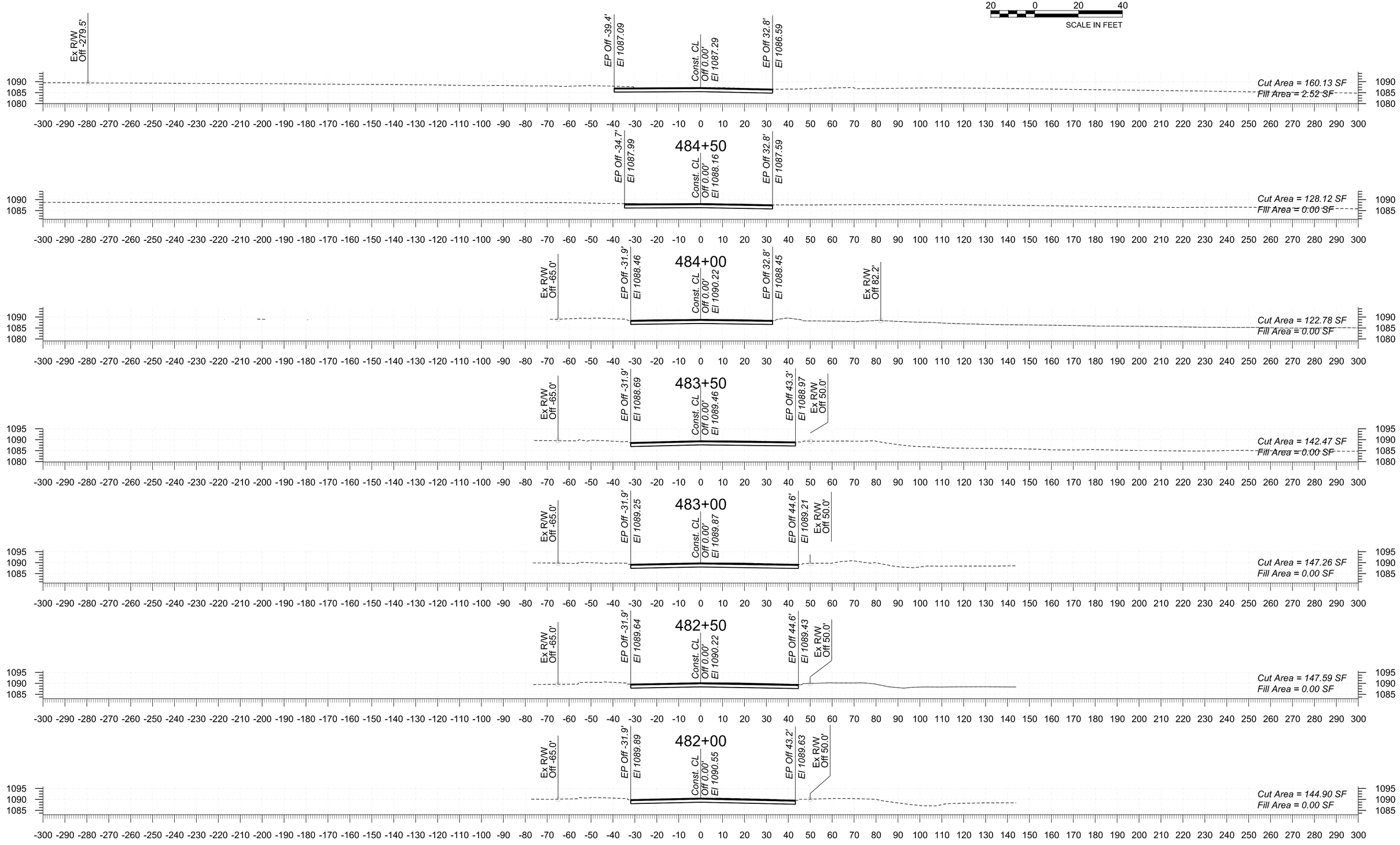

STA 481+50.00 TO STA 484+50.00

Northern Pkwy Segment 2A TT0372

TRACS NO._____

5/4/2026 5:30:35 PM

pw://tyli-pw.bentley.com:tyli-pw-01/Documents/Projects/3010.0013176.005_TT0639/600_DSGN/40_Sandbox/CB/NORTHERN MODEL/PHASE 1/TT0372_XSEC_Northern Pkwy_Phase 1.dgn

F.H.W.A. REGION	STATE	PROJECT NO.	SHEET NO.	TOTAL SHEETS	RECORD DRAWING
9	AZ	TT0372	5	14	

SCALE: Hor: 1"=20'
Vert: 1"=1'

20 0 20 40
SCALE IN FEET

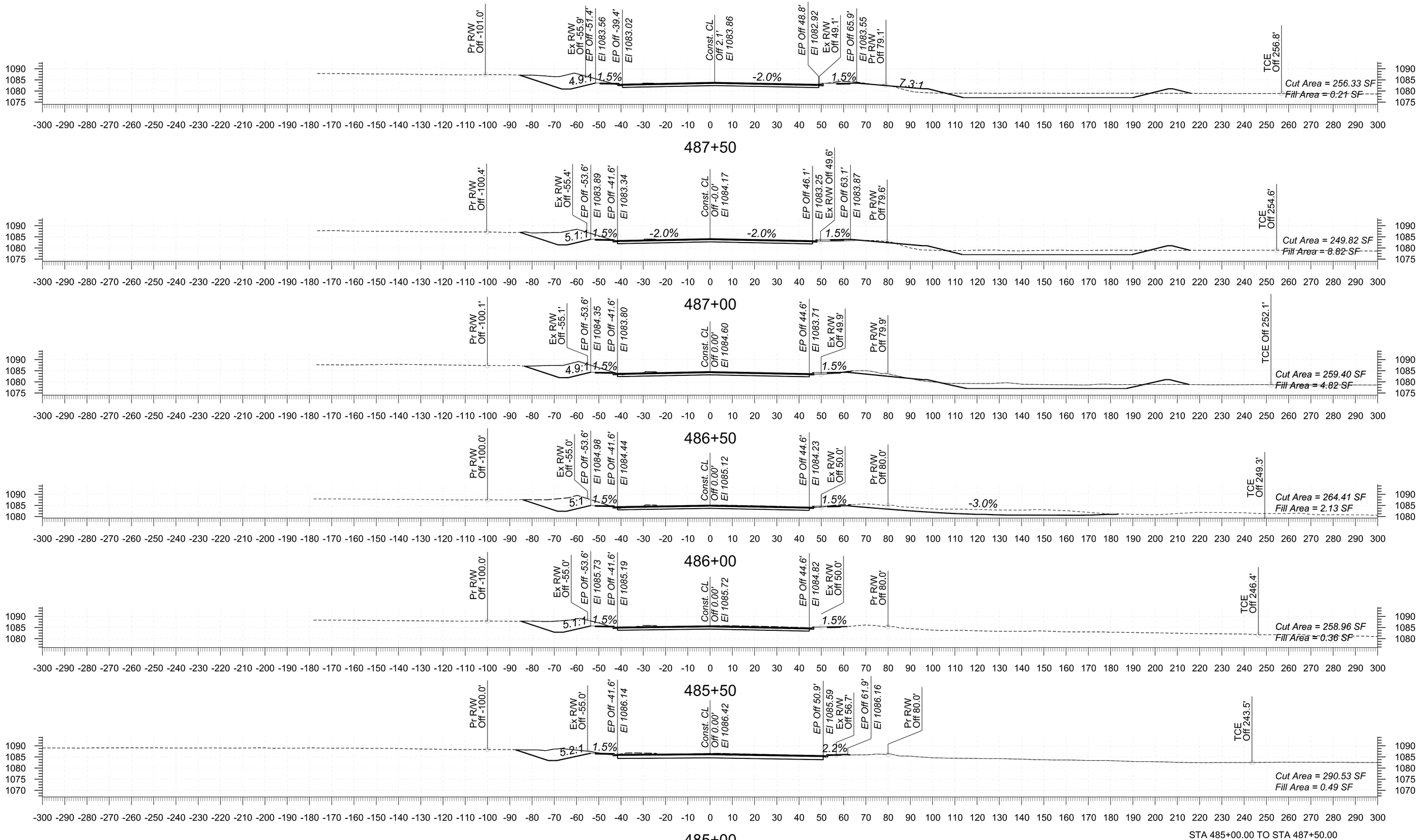

Northern Pkwy Segment 2A TT0372

TRACS NO._____

5/4/2026 5:30:53 PM

pw://lyli-pw.bentley.com:lyli-pw-01/Documents/Projects/3010.0013176.005_TT0639/600_DSGN/40_Sandbox/CB/NORTHERN MODEL/PHASE 1/TT0372_XSEC_Northern Pkwy_Phase 1.dgn

F.H.W.A. REGION	STATE	PROJECT NO.	SHEET NO.	TOTAL SHEETS	RECORD DRAWING
9	AZ	TT0372	6	14	

SCALE: Hor: 1"=20'
Vert: 1"=1'

20 0 20 40
SCALE IN FEET

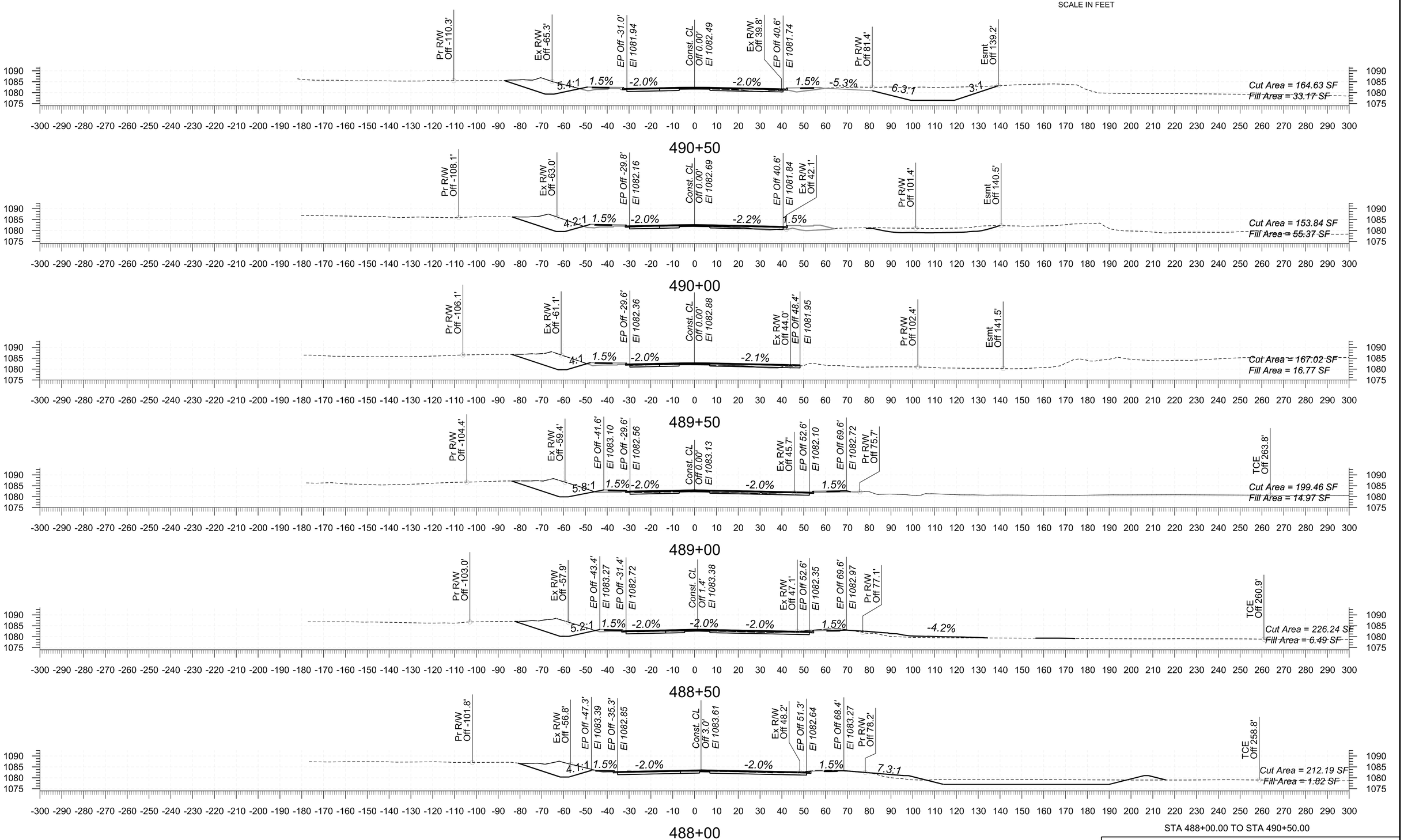

STA 488+00.00 TO STA 490+50.00

Northern Pkwy Segment 2A TT0372

TRACS NO._____

5/4/2026 5:31:15 PM

pw://tyli-pw.bentley.com:tyli-pw-01/Documents/Projects/3010.0013176.005_TT0639/600_DSGN/40_Sandbox/CB/NORTHERN MODEL/PHASE 1/TT0372_XSEC_Northern Pkwy_Phase 1.dgn

F.H.W.A. REGION	STATE	PROJECT NO.	SHEET NO.	TOTAL SHEETS	RECORD DRAWING
9	AZ	TT0372	7	14	

SCALE: Hor: 1"=20'
Vert: 1"=1'
20 0 20 40
SCALE IN FEET

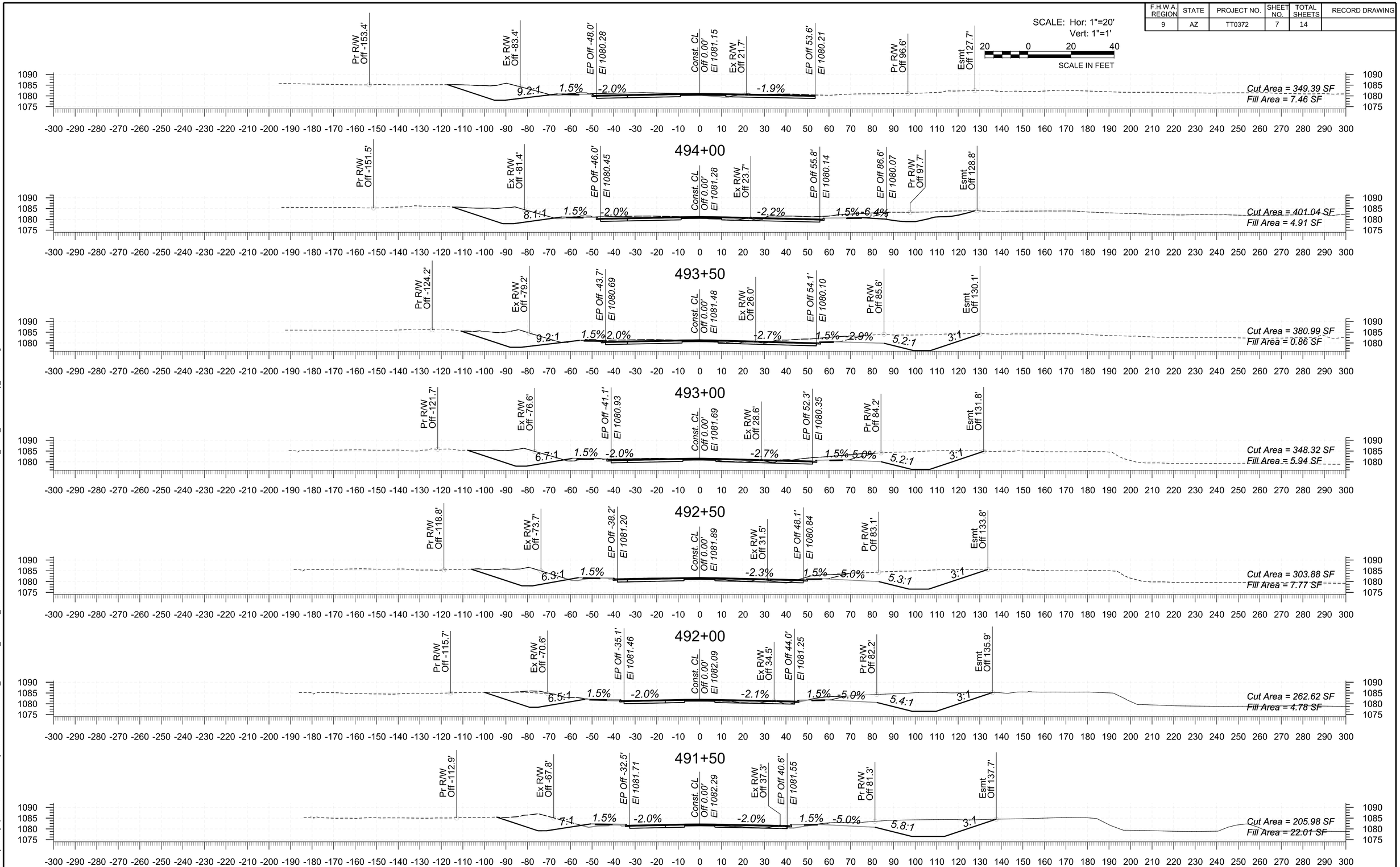

STA 491+00.00 TO STA 494+00.00

Northern Pkwy Segment 2A TT0372

TRACS NO._____

pw://tyli-pw.bentley.com:tyli-pw-01/Documents/Projects/3010.0013176.005_TT0639/600_DSGN/40_Sandbox/CB/NORTHERN MODEL/PHASE 1/TT0372_XSEC_Northern Pkwy_Phase 1.dgn 5:31:36 PM 5/4/2026

F.H.W.A. REGION	STATE	PROJECT NO.	SHEET NO.	TOTAL SHEETS	RECORD DRAWING
9	AZ	TT0372	8	14	

SCALE: Hor: 1"=20'
Vert: 1"=1'

20 0 20 40
SCALE IN FEET

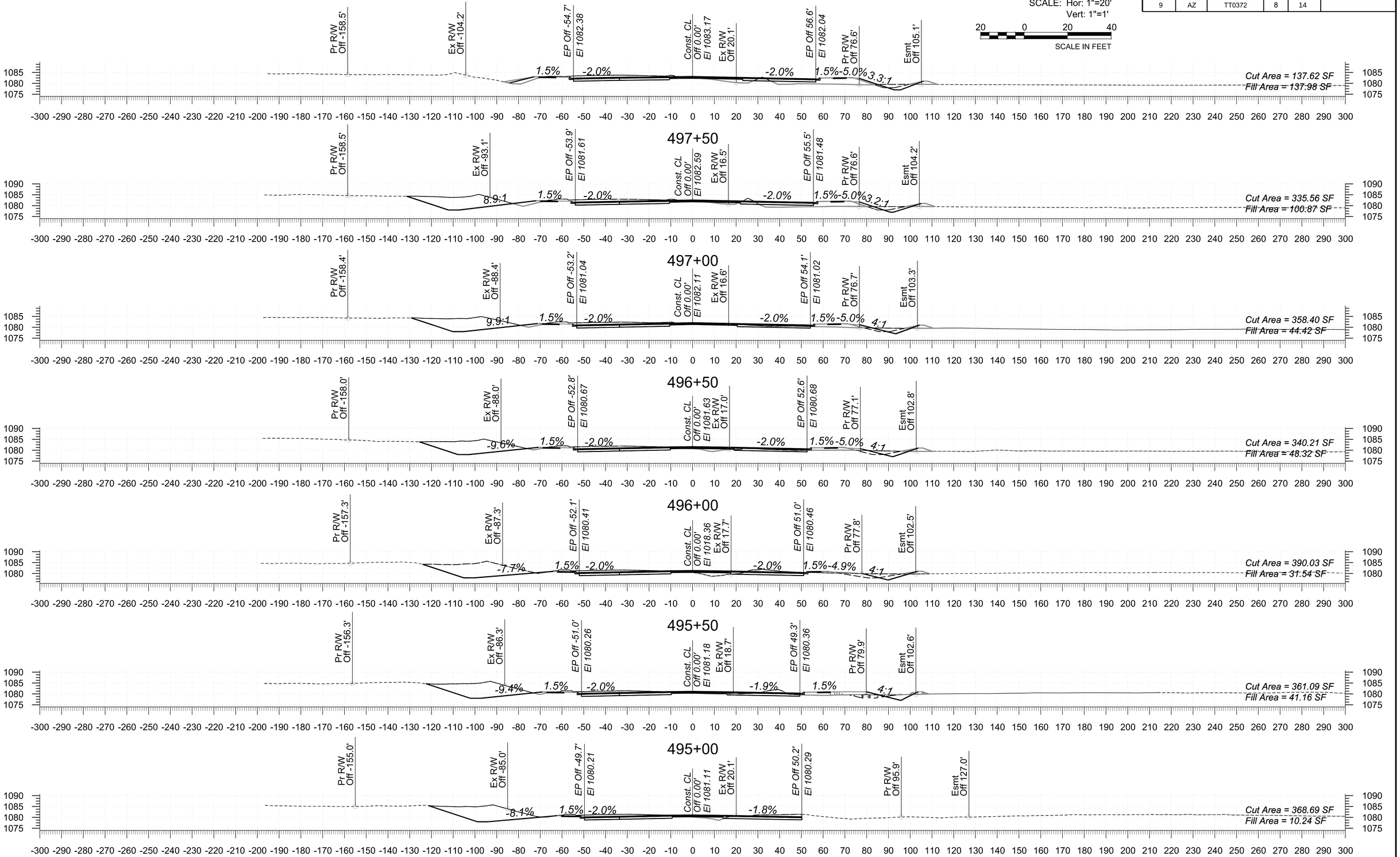

STA 494+50.00 TO STA 497+50.00

Northern Pkwy Segment 2A TT0372

TRACS NO._____

5/4/2026 5:32:00 PM

pw://tyli-pw.bentley.com:tyli-pw-01/Documents/Projects/3010.0013176.005_TT0639/600_DSGN/40_Sandbox/CB/NORTHERN MODEL/PHASE 1/TT0372_XSEC_Northern Pkwy_Phase 1.dgn

F.H.W.A. REGION	STATE	PROJECT NO.	SHEET NO.	TOTAL SHEETS	RECORD DRAWING
9	AZ	TT0372	9	14	

SCALE: Hor: 1"=20'
Vert: 1"=1'

20 0 20 40
SCALE IN FEET

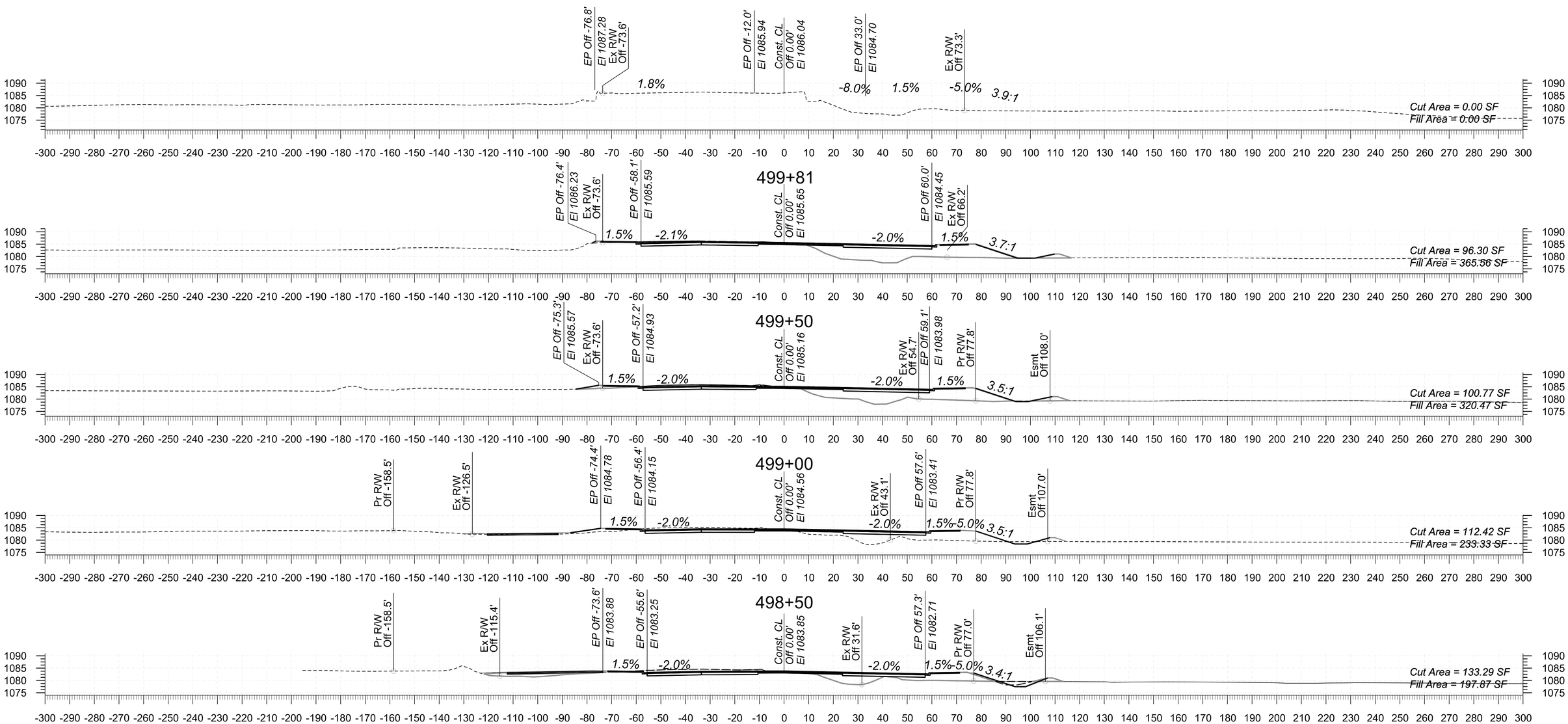

STA 498+00.00 TO STA 499+81.00

Northern Pkwy Segment 2A TT0372

TRACS NO._____

pw://fyli-pw.bentley.com:fyli-pw-01/Documents/Projects/3010.0013176.005_TT0639/600_DSGN/40_Sandbox/CB/NORTHERN MODEL/PHASE 1/TT0372_XSEC_Northern Pkwy_Phase 1.dgn 5:32:19 PM 5/4/2026

F.H.W.A. REGION	STATE	PROJECT NO.	SHEET NO.	TOTAL SHEETS	RECORD DRAWING
9	AZ	TT0372	10	14	

SCALE: Hor: 1"=5'
Vert: 1"=1'

5 0 5 10
SCALE IN FEET

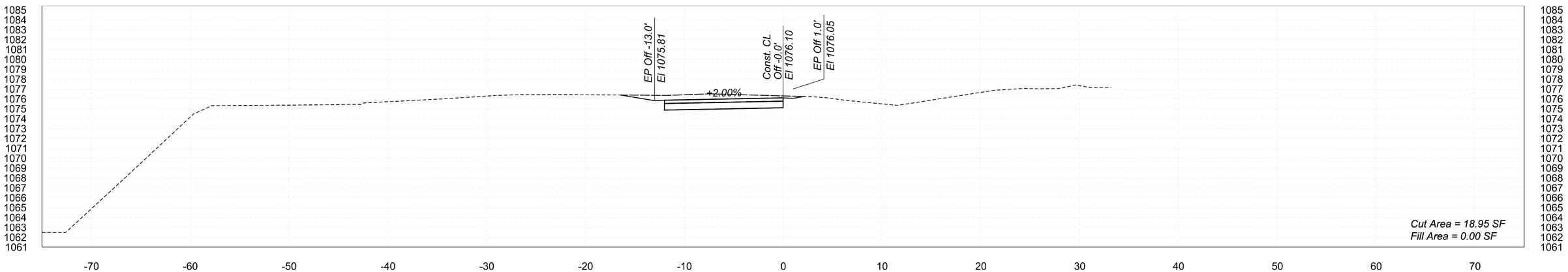

10+50

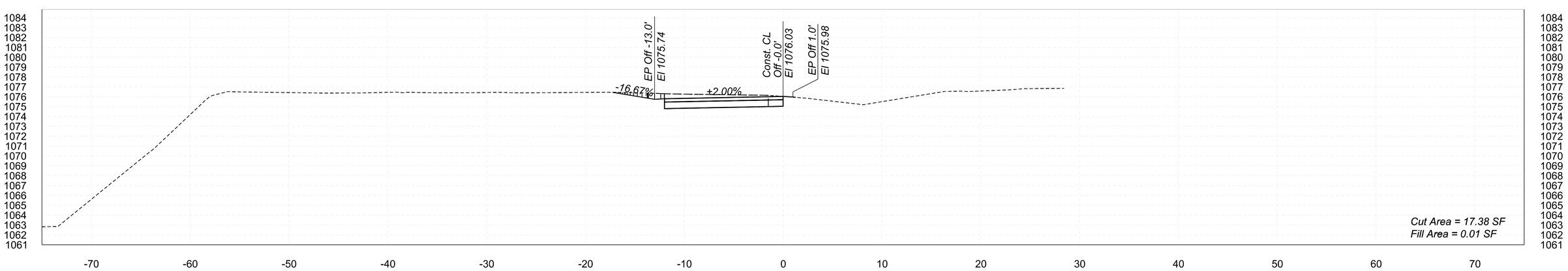

10+10

STA 10+10.00 TO STA 10+50.00

New River Trail	TT0372

TRACS NO._____

pw://tyli-pw.bentley.com:tyli-pw-01/Documents/Projects/3010.0013176.005_TT0639/600_DSGN/40_Sandbox/CB/NORTHERN MODEL/PHASE 1/TT0372_XSEC_New River Trail.dgn 5:25:09 PM 3/19/2026

F.H.W.A. REGION	STATE	PROJECT NO.	SHEET NO.	TOTAL SHEETS	RECORD DRAWING
9	AZ	TT0372	11	14	

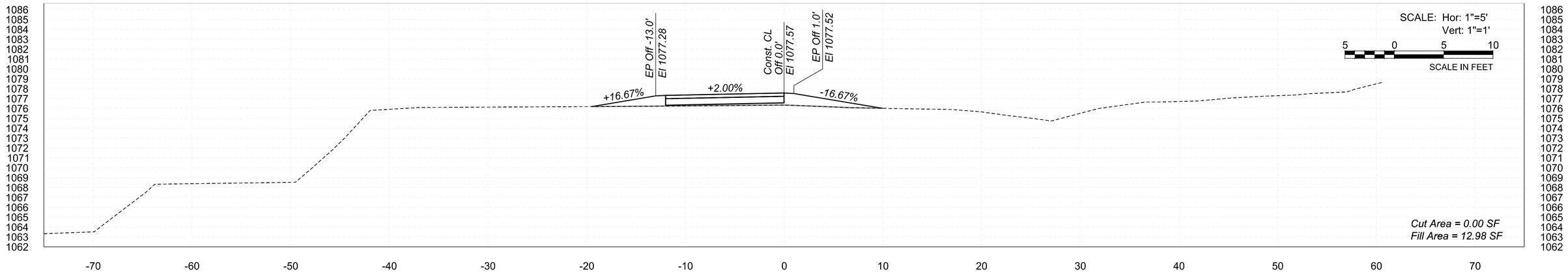

12+00

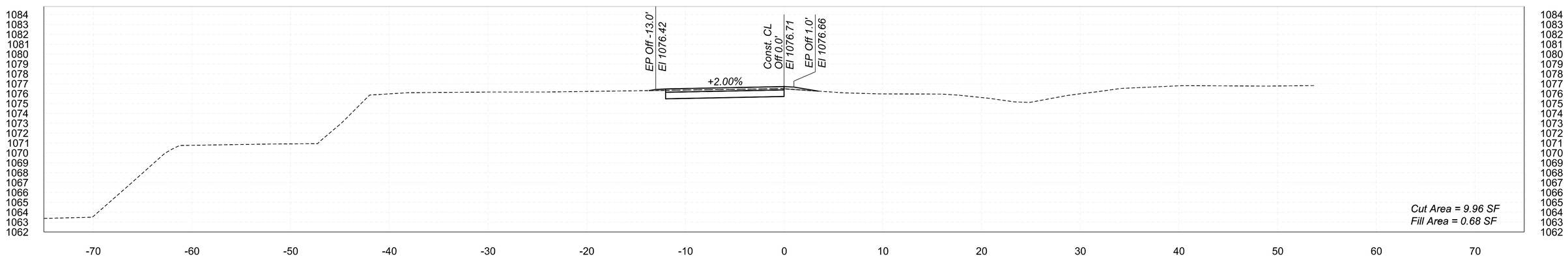

11+50

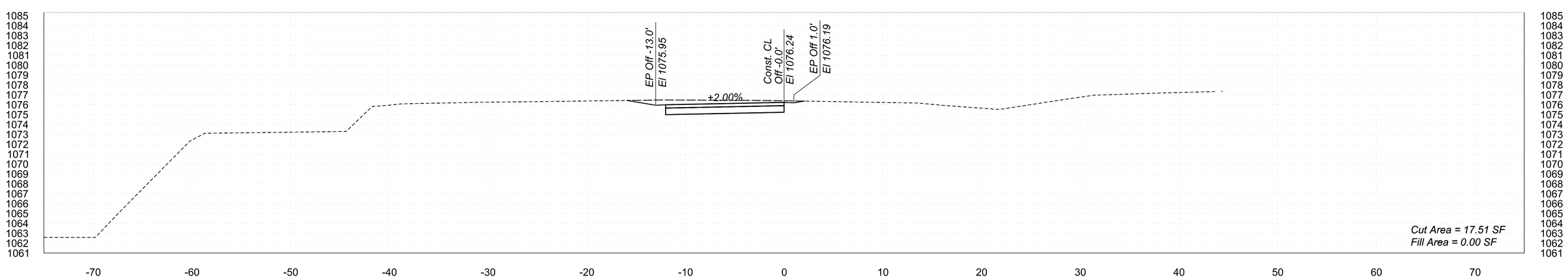

11+00

STA 11+00.00 TO STA 12+00.00

New River Trail	TT0372

TRACS NO._____

pw://tyli-pw.bentley.com:tyli-pw-01/Documents/Projects/3010.0013176.005_TT0639/600_DSGN/40_Sandbox/CB/NORTHERN MODEL/PHASE 1/TT0372_XSEC_New River Trail.dgn
5:25:22 PM 3/19/2026

F.H.W.A. REGION	STATE	PROJECT NO.	SHEET NO.	TOTAL SHEETS	RECORD DRAWING
9	AZ	TT0372	12	14	

SCALE: Hor: 1"=5'
Vert: 1"=1'

5 0 5 10
SCALE IN FEET

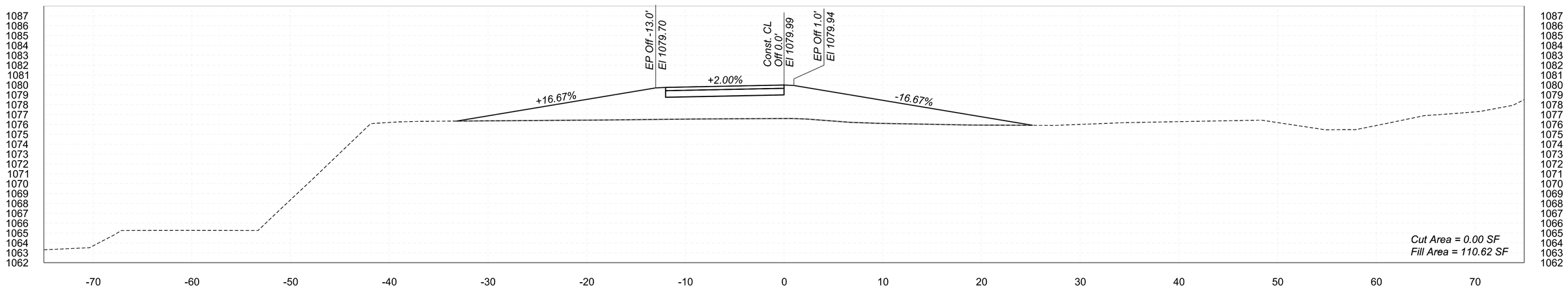

13+00

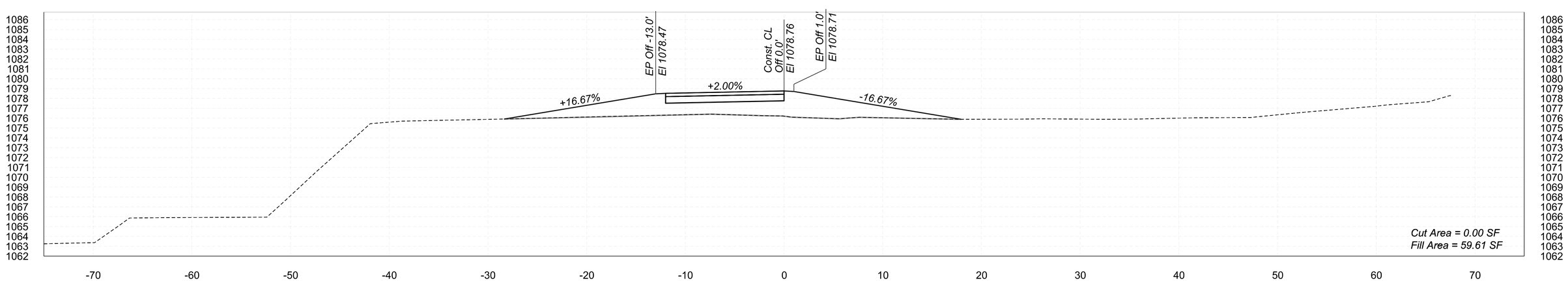

12+50

STA 12+50.00 TO STA 13+00.00

New River Trail	TT0372

TRACS NO._____

pw://tyli-pw.bentley.com:tyli-pw-01/Documents/Projects/3010.0013176.005_TT0639/600_DSGN/40_Sandbox/CB/NORTHERN MODEL/PHASE 1/TT0372_XSEC_New River Trail.dgn 5:25:23 PM 3/19/2026

F.H.W.A. REGION	STATE	PROJECT NO.	SHEET NO.	TOTAL SHEETS	RECORD DRAWING
9	AZ	TT0372	13	14	

SCALE: Hor: 1"=5'
Vert: 1"=1'

5 0 5 10
SCALE IN FEET

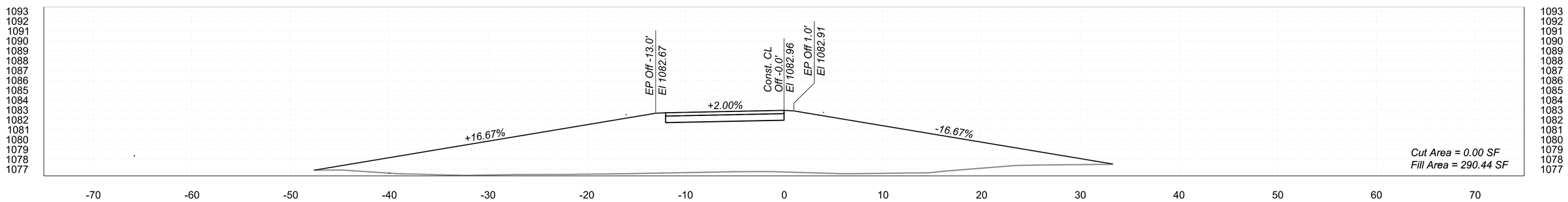

14+50

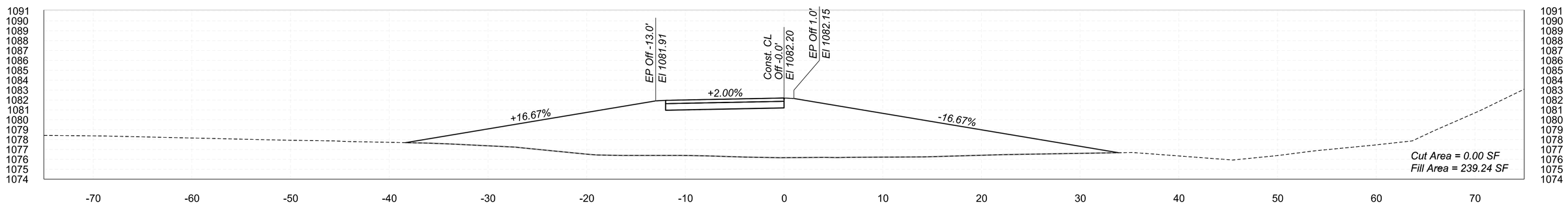

14+00

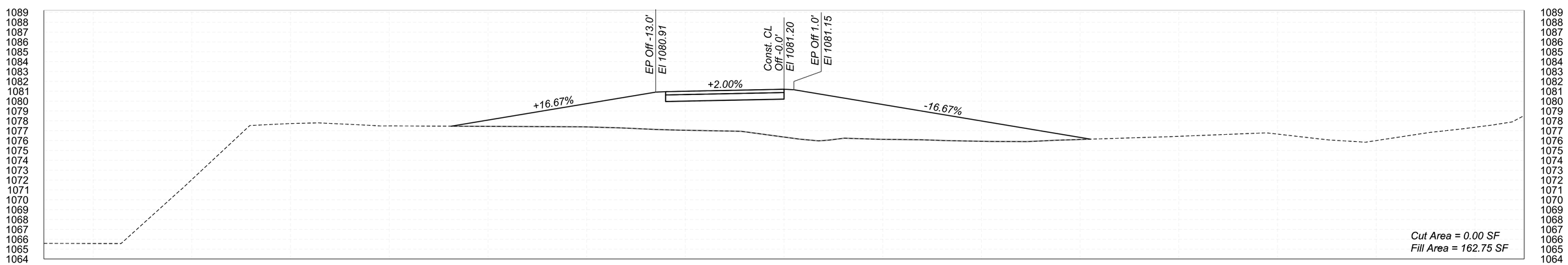

13+50

STA 13+50.00 TO STA 14+50.00

New River Trail TT0372

TRACS NO._____

3/19/2026 5:25:27 PM pw://tyli-pw.bentley.com:tyli-pw-01/Documents/Projects/3010.0013176.005_TT0639/600_DSGN/40_Sandbox/CB/NORTHERN MODEL/PHASE 1/TT0372_XSEC_New River Trail.dgn

F.H.W.A. REGION	STATE	PROJECT NO.	SHEET NO.	TOTAL SHEETS	RECORD DRAWING
9	AZ	TT0372	14	14	

SCALE: Hor: 1"=5'
Vert: 1"=1'

5 0 5 10
SCALE IN FEET

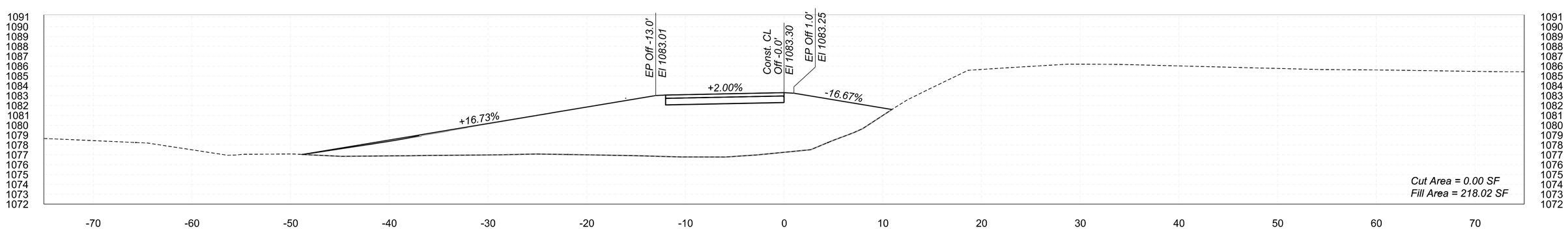

14+81

STA 14+80.64 TO STA 14+80.64

New River Trail	TT0372

TRACS NO._____

pw://tyli-pw.bentley.com:tyli-pw-01/Documents/Projects/3010.0013176.005_TT0639/600_DSGN/40_Sandbox/CB/NORTHERN MODEL/PHASE 1/TT0372_XSEC_New River Trail.dgn 5:25:28 PM 3/19/2026